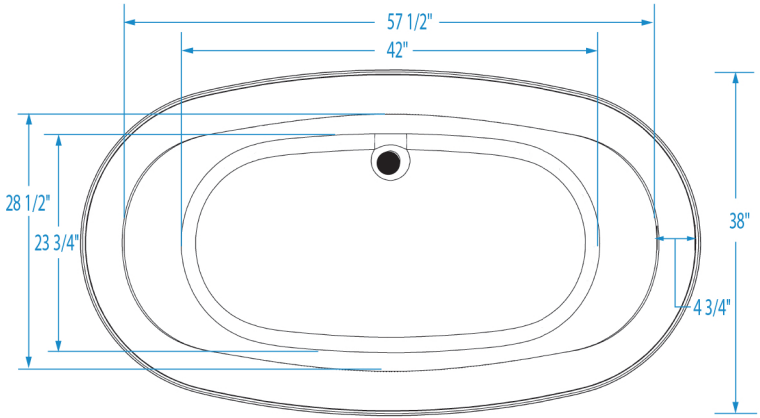
57 1/2"
42"
28 1/2"
23 3/4"
38"
4 3/4"

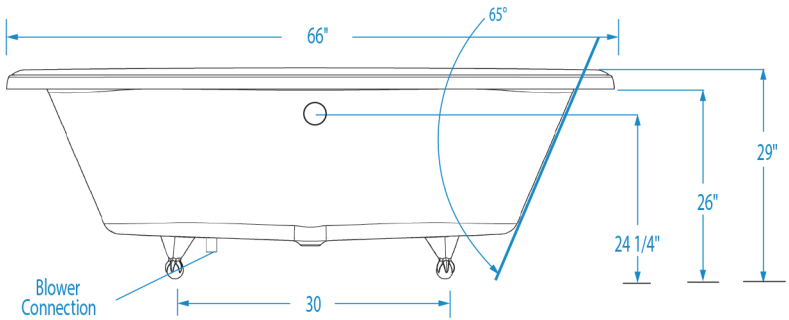
66"
65°
29"
26"
24 1/4"
Blower
Connection
30

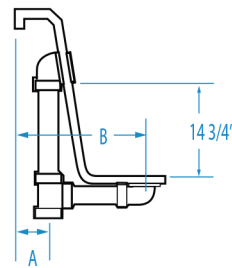
B
14 3/4"
A