AQUATIC
The bath people

STOCKING PRICE LIST

Effective July 2023



AQUATIC

The bath people

WHAT MAKES AN AQUATIC BATH GREAT?

IT'S MORE OF A QUESTION OF 'WHO?'

Behind every product is an expert—an engineer, a designer, a machine operator—someone who is passionate about making bathing a comfortable and enjoyable experience for everyone. So when you choose Aquatic, you're choosing more than a shower, tub or other bath product. You're choosing people who are the best at their craft. And that means you can relax knowing you're getting the best quality, value and options for your specific need.















ACCESSIBLE 12

SHOWER BASES

F3636DPAN 12
F3838PAN 14
F5038PAN 16
F6032APAN 18
F6034BTRPAN 20
F6034CTRPAN 22
F6034DPAN 24
F6038PAN 26

SHOWERS

13636BFSBTTR 28
.....ADA Compliant 28
.....ANSI Compliant 28
.....with L-Bar Configuration 29
.....with L-Bar Configuration and Seat 29
13636BFSCTTR 32
.....ADA Compliant 32
.....ANSI Compliant 32
.....with L-Bar Configuration 33
.....with L-Bar Configuration and Seat 33
13636FHARFR/L 35
13636FHARRF 38
1363BFC2P 41
.....with L-Bar Configuration 41
.....with L-Bar Configuration and Seat 41
.....with L-Bar Configuration, Vertical Bar, Seat and Handheld Sprayer 42
1363BFRF 44
.....ADA Compliant 44
.....ANSI Compliant 44
.....with L-Bar Configuration 45
.....with L-Bar Configuration and Seat 45
.....with Etched L-Bar Configuration 45
.....with Etched L-Bar Configuration and Seat 45
.....MAS 521 CMR Compliant 45
1363BFS 48
.....with L-Bar Configuration 48
.....with L-Bar Configuration and Seat 48
.....with L-Bar Configuration, Vertical Bar, Seat and Handheld Sprayer 49
1363BFSC 51
.....with L-Bar Configuration 51
.....with L-Bar Configuration and Seat 51
.....with L-Bar Configuration, Vertical Bar, Seat and Handheld Sprayer 52
1363BFSCST 54
.....with L-Bar Configuration 54
.....with L-Bar Configuration and Seat 54
.....with L-Bar Configuration, Vertical Bar, Seat and Handheld Sprayer 55
1363BFSD 57
.....ADA Compliant 57
.....ANSI Compliant 57
.....with L-Bar Configuration 58
.....with L-Bar Configuration and Seat 58
.....with Etched L-Bar Configuration 58
.....with Etched L-Bar Configuration and Seat 58
.....MAS 521 CMR Compliant 58
1363EN 61
.....with Vertical Bars 61
.....with Vertical Bars and Seat 61
13838BFLP 64
.....with L-Bar Configuration 64
.....with L-Bar Configuration and Seat 64
.....with L-Bar Configuration, Vertical Bar, Seat and Handheld Sprayer 65
14836BFLP 67
.....ANSI Compliant 67
.....with L-Bar Configuration 67
.....with L-Bar Configuration and Seat 68
14836BFSBTTR 70
.....ANSI Compliant 70
.....with L-Bar Configuration 70
.....with L-Bar Configuration and Seat 71
.....with U-Bar 71
.....with U-Bar and Handheld Sprayer 71
14836BFSCTTR 74
.....ANSI Compliant 74
.....with L-Bar Configuration 74
.....with L-Bar Configuration and Seat 75
.....with U-Bar 75
.....with U-Bar and Handheld Sprayer 75
14836FHA 78
14836ST 81
1483BFSD 84
.....ANSI Compliant 84
.....with L-Bar Configuration 84
.....with L-Bar Configuration and Seat 85
1483EN 87
.....with Vertical Bars and Seat 87
1483TSCH 90
.....with Vertical Bars and Seat 90
1483TSTH 93
.....with U-Bar 93
15836FHA 96
16030BFSBTTR 99
.....ADA Compliant 99
.....ADA Compliant without Seat 99
.....ANSI Compliant 100
.....with L-Bar Configuration 100
.....with L-Bar Configuration and Seat 100
.....with U-Bar 100
16030BFSC 103
.....ADA Compliant 103
.....ADA Compliant without Seat 103
.....ANSI Compliant 104
.....with L-Bar Configuration 104
.....with L-Bar Configuration and Seat 104

.....with U-Bar 104
16030BFSCTTR 107
.....ADA Compliant 107
.....ADA Compliant without Seat 107
.....ANSI Compliant 108
.....with L-Bar Configuration 108
.....with L-Bar Configuration and Seat 108
.....with U-Bar 108
16030TRCOL 111
.....ADA Compliant 111
.....ADA Compliant without Seat 111
.....ANSI Compliant 112
.....with L-Bar Configuration 112
.....with L-Bar Configuration and Seat 112
.....with U-Bar 112
16034BFSBTTR 115
.....ADA Compliant 115
.....ADA Compliant without Seat 115
.....ANSI Compliant 116
.....with L-Bar Configuration 116
.....with L-Bar Configuration and Seat 116
.....with U-Bar 116
16034BFSC 119
.....ADA Compliant 119
.....ADA Compliant without Seat 119
.....ANSI Compliant 120
.....with L-Bar Configuration 120
.....with L-Bar Configuration and Seat 120
.....with U-Bar 120
16034BFSCTTR 123
.....ADA Compliant 123
.....ADA Compliant without Seat 123
.....ANSI Compliant 124
.....with L-Bar Configuration 124
.....with L-Bar Configuration and Seat 124
.....with U-Bar 124
16034TRCOL 127
.....ADA Compliant 127
.....ADA Compliant without Seat 127
.....ANSI Compliant 128
.....with L-Bar Configuration 128
.....with L-Bar Configuration and Seat 128
.....with U-Bar 128
16036BFLP 131
.....with L-Bar Configuration 131
.....with L-Bar Configuration and Seat 131
.....with U-Bar 132
16036BFSBTTR 135
.....ADA Compliant 135
.....ADA Compliant without Seat 135
.....ANSI Compliant 136
.....with L-Bar Configuration 136
.....with L-Bar Configuration and Seat 136
.....with U-Bar 136
16036BFSCTTR 139
.....ADA Compliant 139
.....ADA Compliant without Seat 139
.....ANSI Compliant 140
.....with L-Bar Configuration 140
.....with L-Bar Configuration and Seat 140
.....with U-Bar 140
16036TRCOL 143
.....ADA Compliant 143
.....ADA Compliant without Seat 143
.....ANSI Compliant 144
.....with L-Bar Configuration 144
.....with L-Bar Configuration and Seat 144
.....with U-Bar 144
16037BFSD 147
.....ADA Compliant 147
.....ADA Compliant without Seat 147
.....ANSI Compliant 148
.....with L-Bar Configuration 148
.....with L-Bar Configuration and Seat 148
.....with U-Bar 148
1603BFSB 151
.....ADA Compliant 151
.....ADA Compliant without Seat 151
.....ANSI Compliant 152
.....with L-Bar Configuration 152
.....with L-Bar Configuration and Seat 152
.....with U-Bar 152
.....with Etched L-Bar Configuration 152
.....with Etched L-Bar Configuration and Seat 153
.....MAS 521 CMR Compliant 153
.....California Title 24 Compliant 153
1603BFSC 156
.....ADA Compliant 156
.....ADA Compliant without Seat 156
.....ANSI Compliant 157
.....with L-Bar Configuration 157
.....with L-Bar Configuration and Seat 157
.....with U-Bar 157
.....with Etched L-Bar Configuration 157
.....with Etched L-Bar Configuration and Seat 157
.....MAS 521 CMR Compliant 158
1603BFSD 160
.....ADA Compliant 160
.....ADA Compliant without Seat 160
.....ANSI Compliant 161
.....with L-Bar Configuration and Seat 161
.....with U-Bar 161
.....with Etched L-Bar Configuration 161
.....with Etched L-Bar Configuration and Seat 161
.....MAS 521 CMR Compliant 161
.....California Title 24 Compliant 162
1603BFST 164
.....ADA Compliant 164
.....ADA Compliant without Seat 164
.....ANSI Compliant 165

.....with L-Bar Configuration 165
.....with L-Bar Configuration and Seat 165
.....with U-Bar 165
.....with Etched L-Bar Configuration 165
.....with Etched L-Bar Configuration and Seat 166
.....MAS 521 CMR Compliant 166
.....California Title 24 Compliant 166
1603BFSTD 168
.....ADA Compliant 168
.....ADA Compliant without Seat 168
.....ANSI Compliant 169
.....with L-Bar Configuration 169
.....with L-Bar Configuration and Seat 169
.....with U-Bar 169
1603CFS 172
.....ADA Compliant 172
.....ADA Compliant without Seat 172
.....ANSI Compliant 173
.....with L-Bar Configuration 173
.....with L-Bar Configuration and Seat 173
.....with U-Bar 173
1603TSCB 176
.....with Vertical Bars and Horizontal Bar 176
.....with Vertical Bars, Horizontal Bar and Seat 176
1623BFSTD 179
.....ADA Compliant 179
.....ADA Compliant without Seat 179
.....ANSI Compliant 180
.....with L-Bar Configuration 180
.....with L-Bar Configuration and Seat 180
.....with U-Bar 180
.....with Etched L-Bar Configuration 180
.....with Etched L-Bar Configuration and Seat 181
.....MAS 521 CMR Compliant 181
1623BFSTTX 184
.....with L-Bar Configuration 184
.....with L-Bar Configuration and Seat 184
.....TAS Compliant 185
.....TAS Compliant without Seat 185
.....with U-Bar 185
16334BFNR 188
.....ADA Compliant 188
.....ADA Compliant without Seat 188
.....ANSI Compliant 189
.....with L-Bar Configuration 189
.....with L-Bar Configuration and Seat 189
.....with U-Bar 189
3636BFS 192
.....ADA Compliant 192
.....ANSI Compliant 192
.....with L-Bar Configuration and Seat 193
.....with Etched L-Bar Configuration 193
.....with Etched L-Bar Configuration and Seat 193
.....MAS 521 CMR Compliant 193
3636BFSC 196
.....ADA Compliant 196
.....ANSI Compliant 196
.....with L-Bar Configuration and Seat 197
.....with Etched L-Bar Configuration 197
.....with Etched L-Bar Configuration and Seat 197
.....MAS 521 CMR Compliant 197
4836BFS 200
.....with L-Bar Configuration and Seat 200
.....with U-Bar 200
6030BFSC 203
.....ADA Compliant 203
.....ADA Compliant without Seat 203
.....ANSI Compliant 203
.....with L-Bar Configuration 204
.....with L-Bar Configuration and Seat 204
.....with U-Bar 204
.....with Etched L-Bar Configuration 204
.....with Etched L-Bar Configuration and Seat 204
.....MAS 521 CMR Compliant 204
6030CFS 207
.....ADA Compliant 207
.....ADA Compliant without Seat 207
.....ANSI Compliant 207
.....with L-Bar Configuration 208
.....with L-Bar Configuration and Seat 208
.....with U-Bar 208
6036BFSC 211
.....ADA Compliant 211
.....ADA Compliant without Seat 211
.....ANSI Compliant 211
.....with L-Bar Configuration 212
.....with L-Bar Configuration and Seat 212
.....with U-Bar 212
6036CFS 215
.....ADA Compliant 215
.....ADA Compliant without Seat 215
.....with L-Bar Configuration 215
.....with L-Bar Configuration and Seat 216
.....with U-Bar 216
F1364P 219
.....with L-Bar Configuration 219
.....with L-Bar Configuration and Seat 219
.....with L-Bar Configuration, Seat and Handheld Sprayer 220
F1424P 222
.....California Title 24 Compliant 222
.....with L-Bar Configuration 222
.....with L-Bar Configuration and Seat 223
.....with L-Bar Configuration, Seat and Handheld Sprayer 223
F1424PCA 226
.....California Title 24 Compliant 226
.....with L-Bar Configuration 226
.....with L-Bar Configuration and Seat 227
F1604P 229

.....ADA Compliant 229
.....ADA Compliant without Seat 229
.....ANSI Compliant 230
.....with L-Bar Configuration 230
.....with L-Bar Configuration and Seat 230
.....with U-Bar 230

● TUB SHOWERS

2603CTH 233
.....ADA Compliant 233
.....ANSI Compliant 234
.....with Horizontal Bars 234
.....with Horizontal Bars and Seat 234
2603SMTE 237
.....ADA Compliant 237
.....ANSI Compliant 238
.....with Horizontal Bars 238
.....with Horizontal Bars and Seat 238
.....with Etched Horizontal Bars 238
.....with Etched Horizontal Bars and Seat 239
.....MAS 521 CMR Compliant 239
2603SMTH 242
.....with Horizontal Bars 242
.....with Horizontal Bars and Seat 243
6032ITS 245
.....ADA Compliant 245
.....ANSI Compliant 245
.....with Horizontal Bars 246
.....with Horizontal Bars and Seat 246
F6030STT 249
.....ADA Compliant 249
.....ANSI Compliant 250
.....with Horizontal Bars 250
.....with Horizontal Bars and Seat 250
F6032STT 253
.....ADA Compliant 253
.....ANSI Compliant 254
.....with Horizontal Bars 254
.....with Horizontal Bars and Seat 254

EVERYDAY 258

● BATHTUBS

254027 258
254027M AFR 261
2540CCS 264
260030 267
260030M AFR 270
2600CBD 273
2600CC 276
2600CCS 279
2603OSN 282
2603OT 285
2603OTM AFR 288
2720SK 291
6030SMIN 294
6030SMINM AFR 297
6030STUB 299
6032DMIN 302
6032SMIN 305
6032SMINM AFR 308
6036DMIN 311
6036H 314
6036HM AFR 317
6036SMIN 320
6036SMINM AFR 323
6042BWC 326
6042BWCM AFR 329
6042DMIN 332
6042H 335
6042HCW 338
6042HW 341
6042HWM AFR 344
6042OVAL 347
6042SMIN 350
6042SMINM AFR 353
6042TW 356
6636DMIN 359
6636SMIN 362
6636SMINM AFR 365
7236DMIN 368
7242HCW 371
Alana I 374
Alana II 377
Gardenia I 380
Gardenia III 383
Jasmine I 386
Jasmine II 389

● SHOWER BASES

3636ANEO 392
3636APANB 394
3642APAN 396
3838ANEOB 398
3838NEO 400
4236APANB 402
4242APANB 404
4834APANB 406
6030ABL/R 408
6030SPAN 410
6032ABL/R 413
6032APANL/R 415
6034APAN 417
6034APANBL/R 419
7248MPAN 421
7248PAN 423
9648SPAN 425
Icon SB3232 427
Icon SB3636 429
Icon SB3642 431
Icon SB4234 433
Icon SB4236 435

Icon SB4242 437
Icon SB4832 439
Icon SB4834 441
Icon SB4836 443
Icon SB4842 445
Icon SB4848 447
Icon SB6030L/R 449
Icon SB6032 451
Icon SB6032L/R 453
Icon SB6034 455
Icon SB6034L/R 457
Icon SB6036 459
Icon SB6036L/R 461
Icon SB6042 463
Icon SB7236 465
Icon SB7248 467

SHOWERS

13232P 469
1323C 472
1323CM AFR 475
13632P 478
136364PC 481
13636STT 484
1363C 487
1363CM AFR 490
1363CT 493
1363CTC 496
1363CTM AFR 499
1363STC 502
1363TRIO 505
1382NA2P 508
1382NAC 511
1382NACT 514
1382NAT 517
1382NT2P 520
1422C 523
1422STS 526
1423C 529
1423CM AFR 531
1423CT 534
1423CTC 537
1423CTT 540
14242STNS 543
14242STS 546
14242STT 549
14832P 551
148344PSC 554
14834STT 557
1483CST 560
1483CTGNM AFR 563
1483DTS 566
1483DTSM AFR 569
1483NTRI 572
1483OS 575
1483OSM AFR 578
1483OST 581
1483SG 584
1483SGM AFR 587
1483STS 590
1483STSM AFR 593
1483STT 596
1543CTN 598
1543SG 601
1543SGM AFR 604
160304PS 607
160304PST 610
16030STTL/R 613
16030STTML/R AFR 616
16033P 619
160344PS 622
16034STTS 625
16034STTSM AFR 628
1603COS 630
1603CST 633
1603CTGN 636
1603CTGNM AFR 639
1603DTS 642
1603DTSM AFR 645
1603SG 648
1603SGM AFR 651
1603STC 654
1603STS 657
1603STSM AFR 660
1603TSC 663
16042C2ST 666
16042DEST 669
36AC 672
36ACTRIB 674
48ACS 676

TUB SHOWERS

2543CTG 678
2543CTGM AFR 681
2543GC 684
2543N2P 687
260304P 690
260304PS 693
260304PSM AFR 696
260304PST 698
26032P 701
260330 704
2603302P 707
260330M AFR 710
260330S 713
260330SM AFR 716
26033CCT 719
26033CCTM AFR 722
26033CT 725
26033CTM AFR 728

2603BSTM AFR ... 731
2603CT ... 734
2603CTM AFR ... 737
2603CTS ... 740
2603CTSM AFR ... 743
2603CTW ... 746
2603CTWM AFR ... 749
2603DT ... 752
2603DTM AFR ... 755
2603OCS ... 758
2603OCSM AFR ... 761
2603SG ... 764
2603SGM AFR ... 767
2603SGT ... 770
2603SMT ... 773
2603SMTM AFR ... 776
2603ST3P ... 778
2603TRIO ... 781
2603TRIOM AFR ... 784
6030SM AFR ... 787
6030STT ... 790
6030STTM AFR ... 793
6032CTT ... 795
6032STT ... 798
6032STTM AFR ... 801
6036BSTM AFR ... 803
6036CTT ... 806
6036SG ... 809
6036SGM AFR ... 812
6036ST ... 815
6036STT ... 818
6036STTM AFR ... 821
6042ST ... 824
6042STM AFR ... 827
6042STT ... 830
6042STTM AFR ... 833
6042STWC ... 836
60ACTS ... 839
6636STT ... 841
6636STTM AFR ... 844
7236ST ... 847
DARSEY 10242 ... 850
DARSEY 10242S ... 853
DARSEY 10242STNSW ... 856
DARSEY 10242STSW ... 859
DARSEY 102HG ... 862
DARSEY 102HGS ... 865
DARSEY 102STA ... 868
DARSEY 11442STNS ... 871
DARSEY 11442STS ... 874
DARSEY 114HG ... 877
DARSEY 114HGS ... 880

HYDROTHERAPY 884

BATHTUBS

6030AIS ... 884
Alydar I Elements ... 886
Alydar I Stocking ... 888
Alydar II Elements ... 891
Alydar II Stocking ... 893
Ariel I Elements ... 896
Ariel I Stocking ... 898
Ariel II Elements ... 901
Ariel II Stocking ... 903
Ariel III Elements ... 906
Ariel III Stocking ... 908
Ascot I Stocking ... 910
Ascot II Stocking ... 912
Ascot III Stocking ... 915
Belmont I Elements ... 917
Belmont I Stocking ... 919
Belmont II Elements ... 922
Belmont II Stocking ... 924
Cariani Elements ... 927
Cariani Stocking ... 929
Cavalcade Elements ... 932
Cavalcade Stocking ... 934
Cooper 30 Stocking ... 937
Cooper 32 Stocking ... 940
Davenport Elements ... 943
Davenport Stocking ... 945
Derby Elements ... 948
Derby Stocking ... 949
Dossi 30 Elements ... 952
Dossi 30 Stocking ... 954
Dossi 32 Elements ... 956
Dossi 32 Stocking ... 958
Hialeah II Elements ... 961
Hialeah II Stocking ... 963
Marratta Elements ... 966
Marratta Stocking ... 968
Montrose I Elements ... 971
Montrose I Stocking ... 973
Montrose II Elements ... 975
Montrose II Stocking ... 977
Morandi Elements ... 980
Morandi Stocking ... 982
Novelli Elements ... 985
Novelli Stocking ... 987
Preakness Elements ... 990
Preakness Stocking ... 992
Starla Elements ... 995
Starla Stocking ... 997
Vecelli Elements ... 1000
Vecelli Stocking ... 1002
Velencia 1.5 Stocking ... 1005
Vincenzo Q Stocking ... 1007

SHOWERS

E148 1010
E160 1012
M148 1014
M160 1016

TUB SHOWERS

CAE260S 1018
E260 1020
M260 1022

ACCESSIBLE SERIES PRODUCTS



F3636DPAN





Material : AcrylX™

Features

- Pre-leveled shower base
- 3/4 Inch skirt
- 1/2 beveled threshold threshold
- Barrier free when properly installed
- Integral nailing flange
- Center drain
- East zone only
- AcrlyX™ applied acrylic surface
- Interior dimensions: 36 Inches x 36 Inches x 3-3/8 Inches
- Exterior dimensions: 38 Inches x 38-1/4 Inches x 5 Inches

F3636DPAN - PRICING CATEGORY : FL

SKU	Color	Configuration	Dimensions & Weight	MSRP
F3636DPAN-AL	Almond	Center Drain / Alcove	36” x 36” x 3 3/8” / 31 lb 914mm x 914mm x 86mm / 14.06 kg	$ 966
F3636DPAN-BI	Biscuit			$ 966
F3636DPAN-BO	Bone			$ 966
F3636DPAN-WH	White			$ 931

OPTIONS

SKU	Description	MSRP
4200BRASDRSF	2” Brass Surefit Joint Shower Drain Brass drain material Snap in strainer-stainless steel No-caulk connection.	$ 48

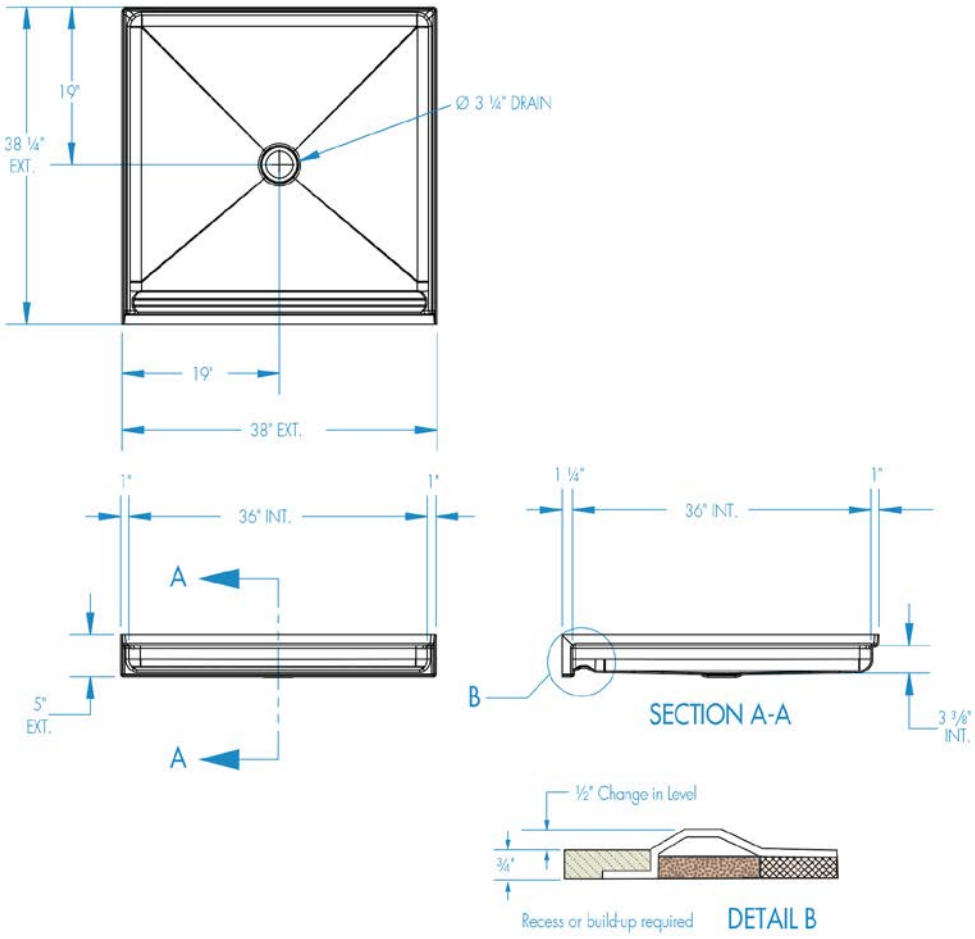
19"
38 ¼"
EXT.
Ø 3 ¼" DRAIN
19"
38" EXT.
1"
36" INT.
1"
A
A
5"
EXT.
1 ¼"
36" INT.
1"
B
SECTION A-A
3 ⅜"
INT.
½" Change in Level
¾"
Recess or build-up required
DETAIL B

F3838PAN



Material : AcrylX™

Features

- Pre-leveled shower base
- 4 Inch skirt
- Integral nailing flange
- Center drain
- AcrlyX™ applied acrylic surface
- Interior dimensions: 36 Inches x 36 Inches x 2-3/4 Inches
- Exterior dimensions: 38 Inches x 38 Inches x 4-3/4 Inches

F3838PAN - PRICING CATEGORY : FL

SKU	Color	Configuration	Dimensions & Weight	MSRP
F3838PAN-AL	Almond	Center Drain / Alcove	36” x 36” x 4 3/4” / 31 lb 914mm x 914mm x 121mm / 14.06 kg	$ 966
F3838PAN-BI	Biscuit			$ 966
F3838PAN-BO	Bone			$ 966
F3838PAN-WH	White			$ 931

OPTIONS

SKU	Description	MSRP
4200BRASDRSF	2” Brass Surefit Joint Shower Drain Brass drain material Snap in strainer-stainless steel No-caulk connection.	$ 48

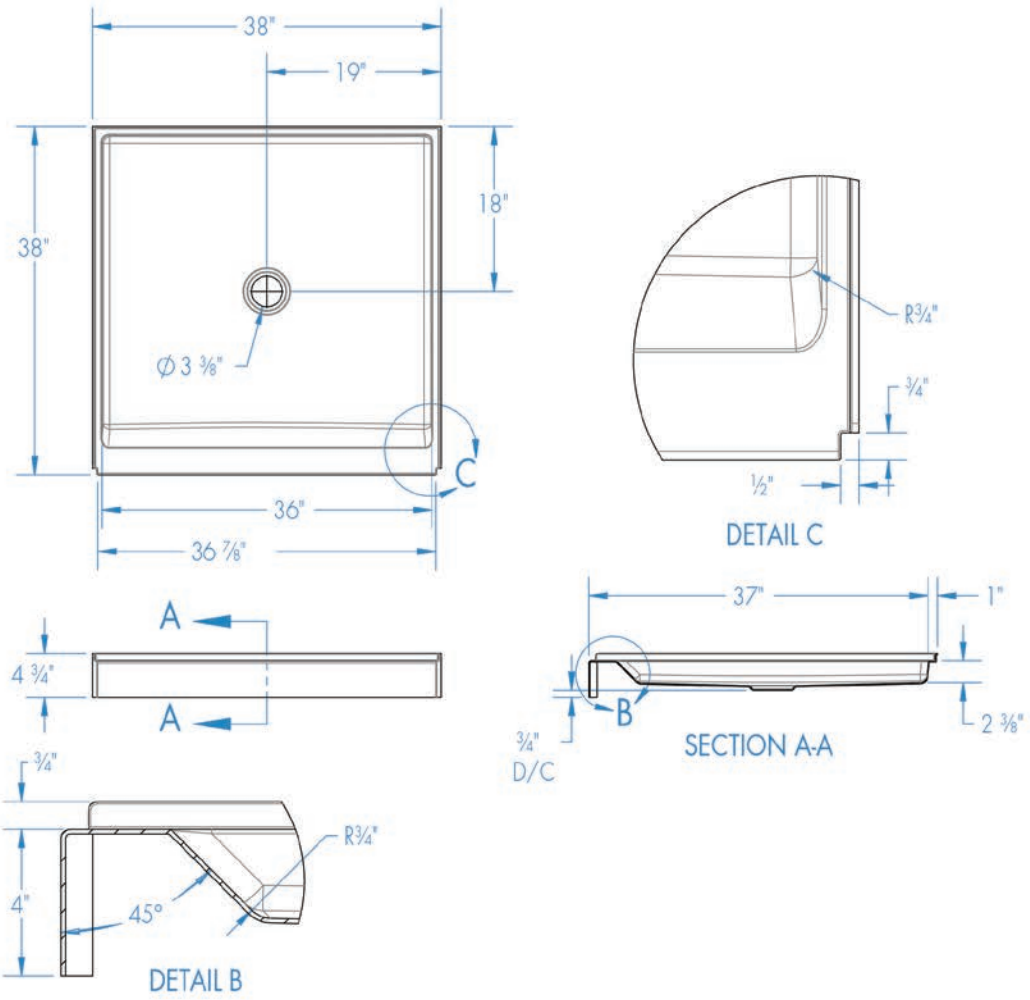
38"
19"
38"
18"
Ø 3 3/8"
C
36"
36 7/8"
A
4 3/4"
A
3/4"
4"
45°
R3/4"
DETAIL B
R3/4"
3/4"
1/2"
DETAIL C
37"
1"
B
2 3/8"
3/4"
D/C
SECTION A-A

F5038PAN





Material : AcrylX™

Features

- Pre-leveled shower base
- Reduced 4 Inch skirt
- Integral nailing flange
- Center drain
- AcrlyX™ applied acrylic surface
- Interior dimensions: 48 Inches x 37 Inches x 2-3/4 Inches
- Exterior dimensions: 50 Inches x 38 Inches x 4-3/4 Inches

F5038PAN - PRICING CATEGORY : FL

SKU	Color	Configuration	Dimensions & Weight	MSRP
F5038PAN-AL	Almond	Center Drain / Alcove	48” x 37” x 4 3/4” / 31 lb 1219mm x 940mm x 121mm / 14.06 kg	$ 1099
F5038PAN-BI	Biscuit			$ 1099
F5038PAN-BO	Bone			$ 1099
F5038PAN-WH	White			$ 1064

OPTIONS

SKU	Description	MSRP
4200BRASDRSF	2” Brass Surefit Joint Shower Drain Brass drain material Snap in strainer-stainless steel No-caulk connection.	$ 48

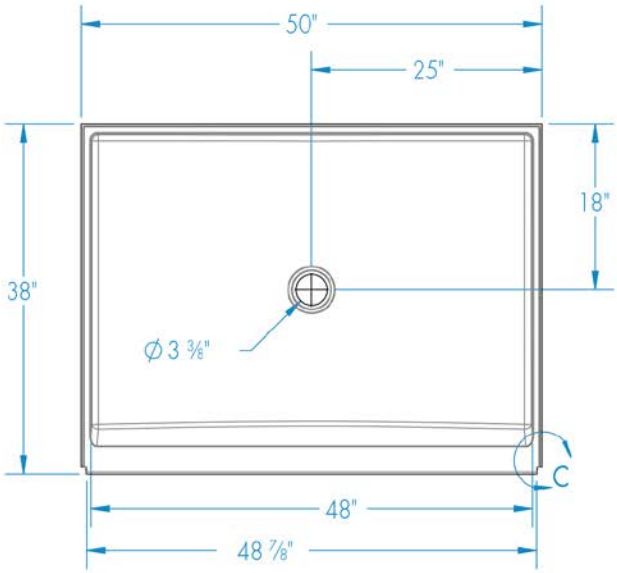

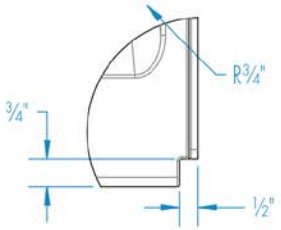

DETAIL C

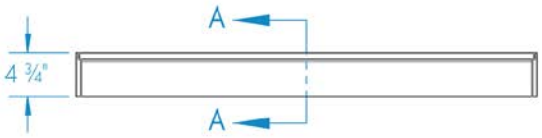

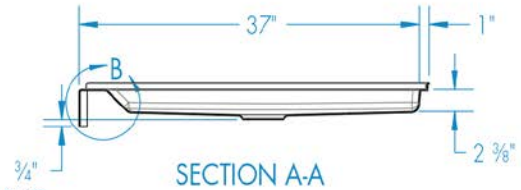

SECTION A-A

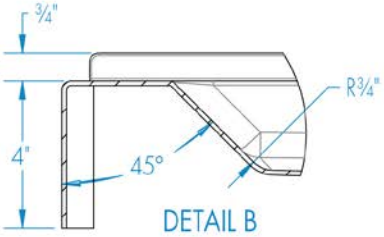

DETAIL B

F6032APAN



Material : Premium Cast Acrylic

Features

- Pre-leveled shower base
- 3/4 Inch skirt
- 1/2 Inch beveled threshold
- Barrier free when properly installed
- Integral nailing flange
- Center drain
- Premium, durable cast acrylic finish
- Interior dimensions: 60 Inches x 31 Inches x 3 Inches
- Exterior Dimensions: 61-3/4 Inches x 33 Inches x 5 Inches

F6032APAN - PRICING CATEGORY : FL

SKU	Color	Configuration	Dimensions & Weight	MSRP
F6032APAN-BI	Biscuit	Center Drain / Alcove	60” x 31” x 3” / 31 lb 1524mm x 787mm x 76mm / 14.06 kg	$ 968
F6032APAN-WH	White			$ 933

OPTIONS

SKU	Description	MSRP
4200BRASDRSF	2” Brass Surefit Joint Shower Drain Brass drain material Snap in strainer-stainless steel No-caulk connection.	$ 48

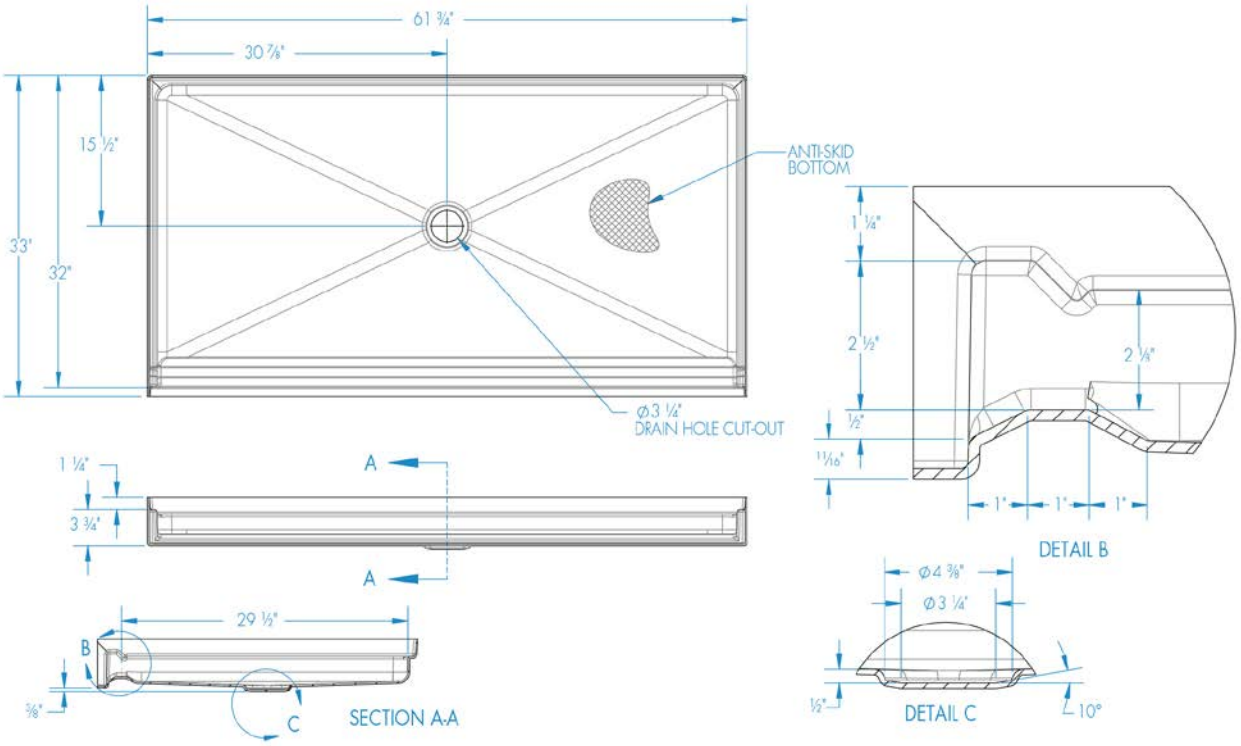
61 ¾"
30 ⅞"
15 ½"
33"
32"
ANTI-SKID BOTTOM
Ø3 ¼"
DRAIN HOLE CUT-OUT
1 ¼"
2 ½"
½"
1 1/16"
2 ⅛"
1"
1"
1"
DETAIL B
1 ¼"
3 ¾"
A
A
29 ½"
B
⅜"
C
SECTION A-A
Ø4 ⅜"
Ø3 ¼"
½"
10°
DETAIL C

F6034BTRPAN



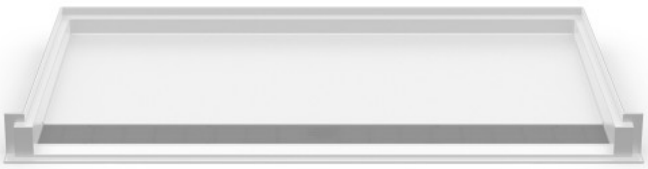

Material : AcrylX™

Features

- Pre-leveled shower base
- 1/2 Inch skirt
- 1/2 Inch beveled change of level (COL) threshold
- Barrier free when properly installed
- Integral nailing flange
- Center front drain outlet
- AcrlyX™ applied acrylic surface
- Interior dimensions: 60 Inches x 34 Inches x 2-5/8 Inches
- Exteriror dimensions: 66 Inches x 36-1/8 Inches x 4-5/8 Inches

F6034BTRPAN - PRICING CATEGORY : FL

SKU	Color	Configuration	Dimensions & Weight	MSRP
F6034BTRPAN-BI	Biscuit	Center Front Drain / Alcove	60” x 34” x 2 5/8” / 40 lb 1524mm x 864mm x 67mm / 18.14 kg	Quote Only
F6034BTRPAN-BO	Bone			Quote Only
F6034BTRPAN-WH	White			Quote Only

OPTIONS

SKU	Description	MSRP
4200BRASDRSF	2” Brass Surefit Joint Shower Drain Brass drain material Snap in strainer-stainless steel No-caulk connection.	$ 48
TRENCHMAT	Underaly ramp for trench drain shower models Quantity of (2)	$ 405
M-60WGRATE	Optional powder coated white trench grate. Unit comes standard with Stainless Steel.	$ 1041

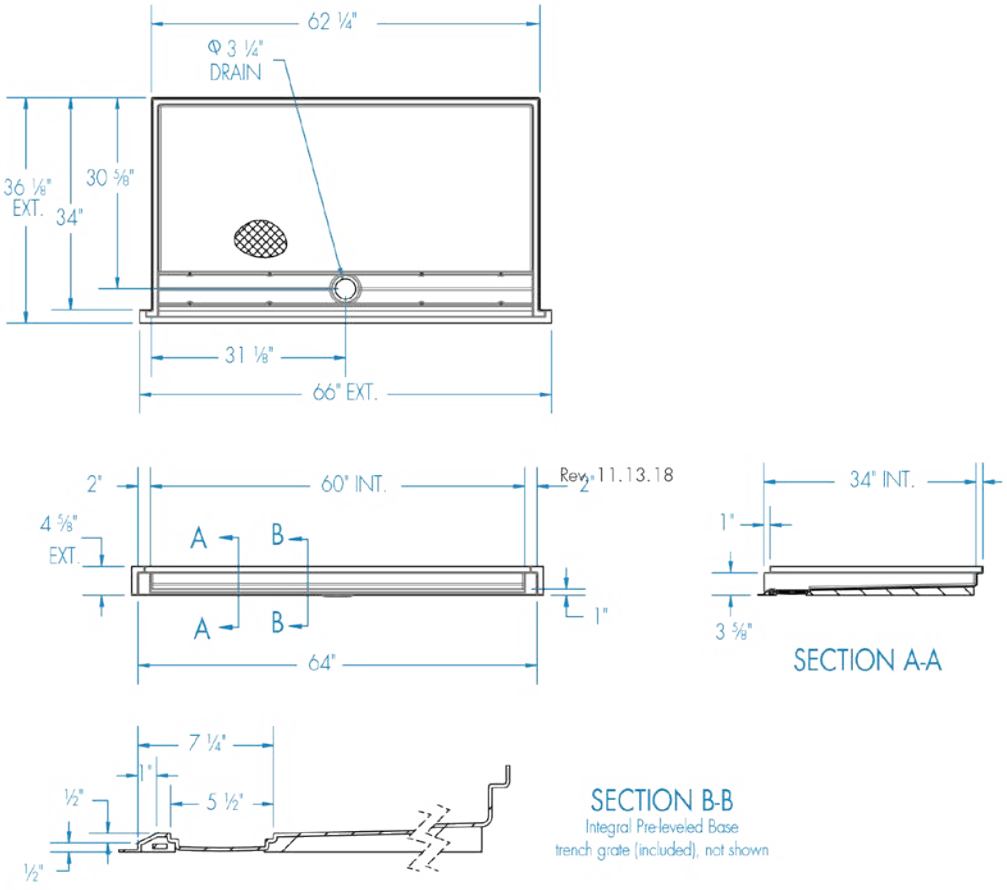
62 ¼"
Φ 3 ¼"
DRAIN
36 ⅛"
EXT.
34"
30 ⅝"
31 ⅛"
66" EXT.
2"
60" INT.
2"
Rev. 11.13.18
4 ⅝"
EXT.
A
B
A
B
1"
64"
34" INT.
1"
3 ⅝"
SECTION A-A
7 ¼"
1"
5 ½"
½"
½"
SECTION B-B
Integral Pre-leveled Base
trench grate (included), not shown

F6034CTRPAN





Material : AcrylX™

Features

- Pre-leveled shower base
- 1-1/8 Inch skirt
- No interior threshold
- Barrier free when properly installed
- Integral nailing flange
- Center front drain outlet
- AcrlyX™ applied acrylic surface
- Interior dimensions: 60 Inches x 34 Inches x 2-1/2 Inches
- Exterior dimensions: 66 Inches x 36-1/8 Inches x 4-5/8 Inches

F6034CTRPAN - PRICING CATEGORY : FL

SKU	Color	Configuration	Dimensions & Weight	MSRP
F6034CTRPAN-BI	Biscuit	Center Front Drain / Alcove	60” x 34” x 2 1/2” / 40 lb 1524mm x 864mm x 64mm / 18.14 kg	Quote Only
F6034CTRPAN-BO	Bone			Quote Only
F6034CTRPAN-WH	White			Quote Only

OPTIONS

SKU	Description	MSRP
4200BRASDRSF	2” Brass Surefit Joint Shower Drain Brass drain material Snap in strainer-stainless steel No-caulk connection.	$ 48
M-60WGRATE	Optional powder coated white trench grate. Unit comes standard with Stainless Steel.	$ 1041

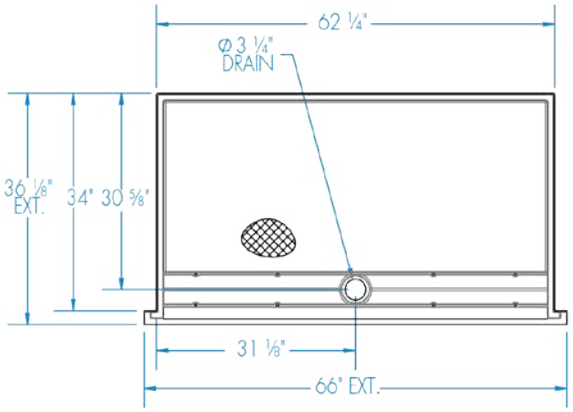

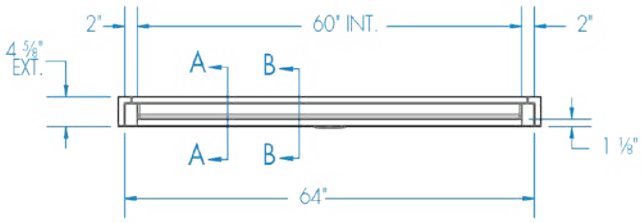

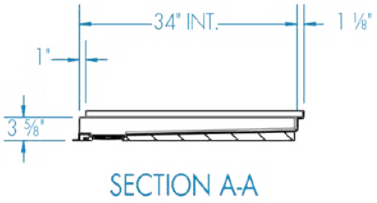

SECTION A-A

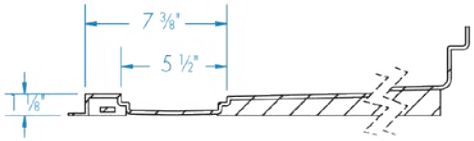

SECTION B-B

Integral Pre-leveled Base
trench grate (included), not shown

F6034DPAN



Material : AcrylX™

Features

- Pre-leveled shower base
- 3/4 Inch skirt
- 1/2 Inch interior threshold
- Barrier free when properly installed
- Integral nailing flange
- Center drain
- East zone only
- AcrlyX™ applied acrylic surface
- Interior dimensions: 60 Inches x 34 Inches x 3-3/8 Inches
- Exterior dimensions: 62 Inches x 36-1/4 Inches x 5 Inches

F6034DPAN - PRICING CATEGORY : FL

SKU	Color	Configuration	Dimensions & Weight	MSRP
F6034DPAN-AL	Almond	Center Drain / Alcove	60” x 34” x 3 3/8” / 31 lb 1524mm x 864mm x 86mm / 14.06 kg	$ 1335
F6034DPAN-BI	Biscuit			$ 1335
F6034DPAN-BO	Bone			$ 1335
F6034DPAN-WH	White			$ 1300

OPTIONS

SKU	Description	MSRP
4200BRASDRSF	2” Brass Surefit Joint Shower Drain Brass drain material Snap in strainer-stainless steel No-caulk connection.	$ 48

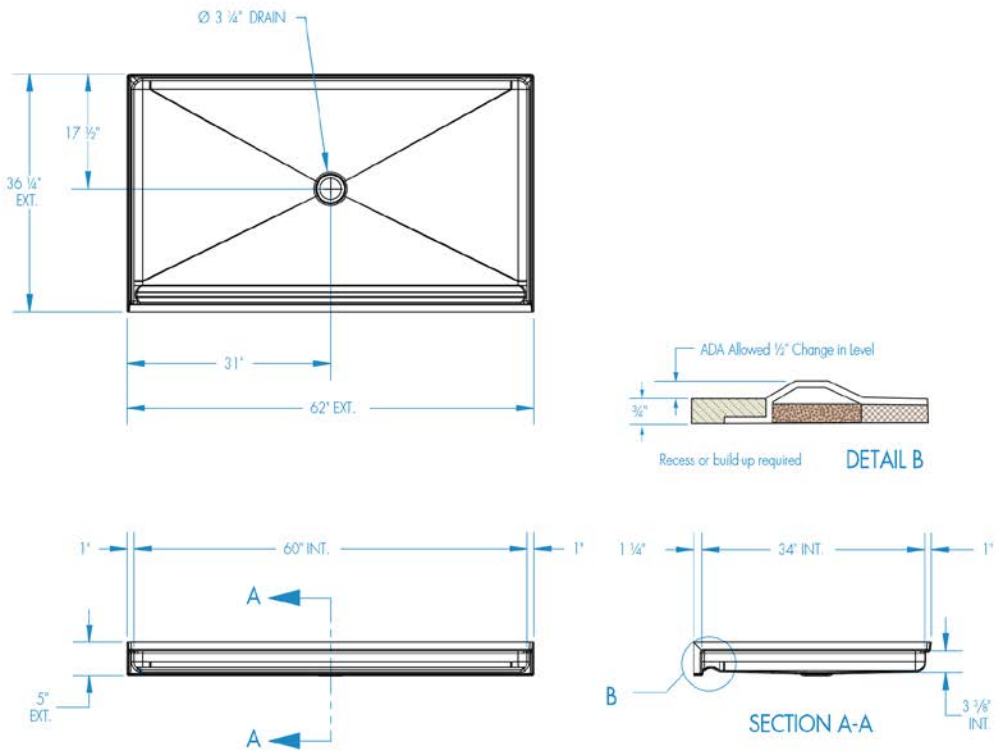
Ø 3 ¼" DRAIN
17 ½"
36 ¼"
EXT.
31"
62" EXT.
ADA Allowed ½" Change in Level
¾"
Recess or build-up required
DETAIL B
1"
60" INT.
1"
A
A
5"
EXT.
1 ¼"
34" INT.
1"
B
SECTION A-A
3 ⅜"
INT.

F6038PAN





Material : AcrylX™

Features

- Pre-leveled shower base
- Reduced 4 Inch skirt
- Integral nailing flange
- Center drain
- AcrlyX™ applied acrylic surface
- Interior dimensions: 58 Inches x 37 Inches x 2-3/4 Inches
- Exterior dimensions: 60 Inches x 38 Inches x 4-3/4 Inches

F6038PAN - PRICING CATEGORY : FL

SKU	Color	Configuration	Dimensions & Weight	MSRP
F6038PAN-AL	Almond	Center Drain / Alcove	58” x 37” x 4 3/4” / 31 lb 1473mm x 940mm x 121mm / 14.06 kg	$ 1183
F6038PAN-BI	Biscuit			$ 1183
F6038PAN-BO	Bone			$ 1183
F6038PAN-WH	White			$ 1148

OPTIONS

SKU	Description	MSRP
4200BRASDRSF	2” Brass Surefit Joint Shower Drain Brass drain material Snap in strainer-stainless steel No-caulk connection.	$ 48

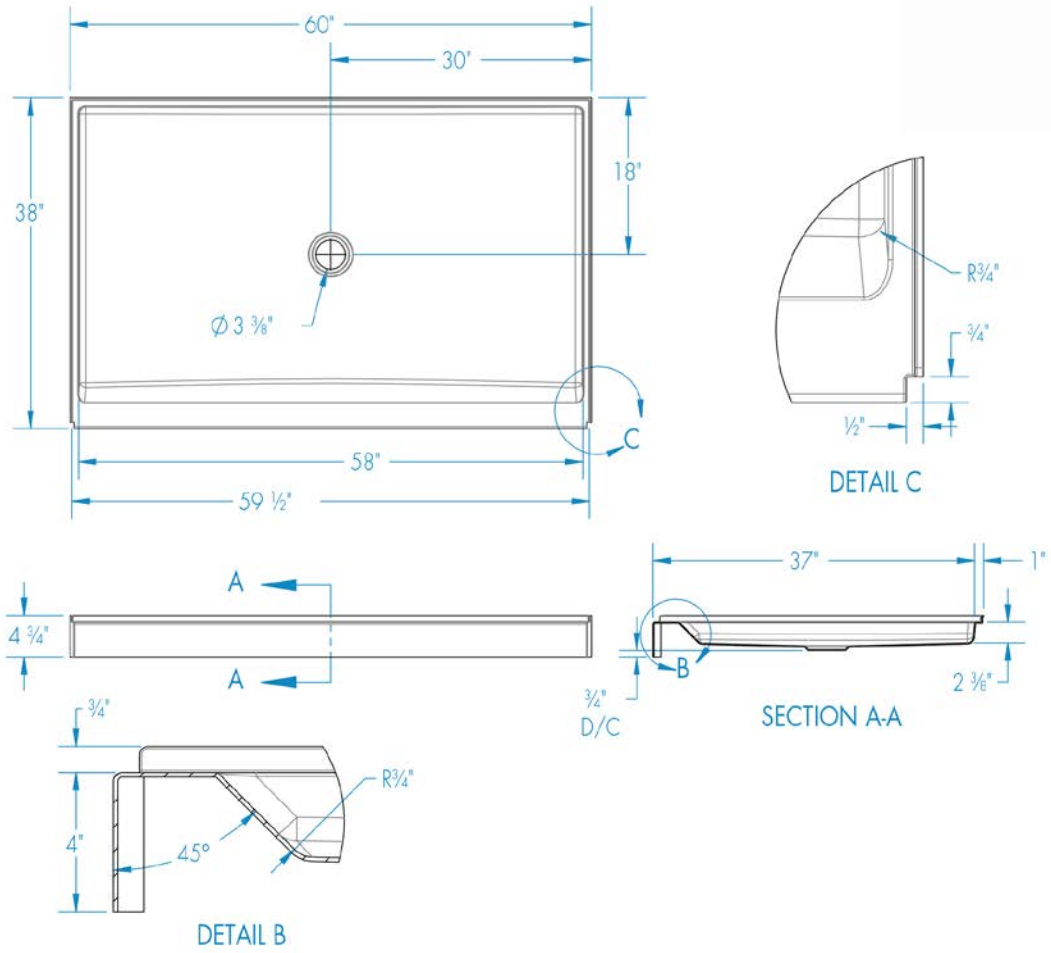
60"
30"
38"
18"
Ø 3 ⅜"
C
58"
59 ½"
R¾"
¾"
½"
DETAIL C
A
4 ¾"
A
37"
1"
B
¾"
D/C
2 ⅜"
SECTION A-A
¾"
4"
45°
R¾"
DETAIL B

13636BFSBTTR





Material : AcrylX™

Features

- 1-Piece shower
- AcrylX™ applied acrylic surface
- 1/2 Inch skirt
- 1/2 Inch change of level (COL) beveled threshold
- Barrier free when properly installed
- Compliant when properly installed
- Smooth large 12 Inch x 24 Inch subway tile wall
- Center front drain outlet
- Level base
- Integral front trench drain
- Interior Dimensions: 36 Inches x 36 Inches x 76-3/4 Inches
- Exterior dimensions: 42 Inches x 38-1/8 Inches x 78-3/4 Inches
- Stainless steel grate

13636BFSBTTR - PRICING CATEGORY : FL

SKU	Color	Configuration	Dimensions & Weight	MSRP
13636BFSBTTR-BI	Biscuit	Center Drain	36” x 36” x 76 3/4” / 140 lb 914mm x 914mm x 1949mm / 63.49 kg	Quote Only
13636BFSBTTR-BO	Bone			Quote Only
13636BFSBTTR-WH	White			Quote Only

13636BFSBTTR - ADA COMPLIANT CONFIGURATION

SKU	Color	Configuration	Dimensions & Weight	MSRP
13636BFSBTTR-BI	Biscuit	Center Drain ADA Compliant Configuration	36” x 36” x 76 3/4” / 140 lb 914mm x 914mm x 1949mm / 63.49 kg	Quote Only
13636BFSBTTR-BO	Bone			Quote Only
13636BFSBTTR-WH	White			Quote Only

13636BFSBTTR - ANSI COMPLIANT CONFIGURATION

SKU	Color	Configuration	Dimensions & Weight	MSRP
13636BFSBTTR-BI	Biscuit	Center Drain ANSI Compliant Configuration	36” x 36” x 76 3/4” / 140 lb 914mm x 914mm x 1949mm / 63.49 kg	Quote Only
13636BFSBTTR-BO	Bone			Quote Only
13636BFSBTTR-WH	White			Quote Only

13636BFSBTTR - L-BAR CONFIGURATION

SKU	Color	Configuration	Dimensions & Weight	MSRP
13636BFSBTTR-BI	Biscuit	Center Drain L-Bar Configuration	36” x 36” x 76 3/4” / 140 lb 914mm x 914mm x 1949mm / 63.49 kg	Quote Only
13636BFSBTTR-BO	Bone			Quote Only
13636BFSBTTR-WH	White			Quote Only

13636BFSBTTR - L-BAR CONFIGURATION AND FOLDING SEAT

SKU	Color	Configuration	Dimensions & Weight	MSRP
13636BFSBTTR-BI	Biscuit	Center Drain L-Bar Configuration and Folding Seat	36” x 36” x 76 3/4” / 140 lb 914mm x 914mm x 1949mm / 63.49 kg	Quote Only
13636BFSBTTR-BO	Bone			Quote Only
13636BFSBTTR-WH	Biscuit			Quote Only

OPTIONS

SKU	Description	MSRP
4200BRASDRSF	2” Brass Surefit Joint Shower Drain Brass drain material Snap in strainer-stainless steel No-caulk connection.	$ 48
1S3221PDL	White fold-up L-shaped cushioned seat (factory installed) Installed on Left side wall	$ 889
1S3221PDR	White fold-up L-shaped cushioned seat (factory installed) Installed on Right side wall	$ 889
1S3221PHWL	Solid fold-up phenolic seat with slats for drainage (factory installed) Installed on Left side wall Available finishes: White **(WH)**, Teak**(TK)**,	$ 925
1S3221PHL		$ 925
1S3221PHR	Solid fold-up phenolic seat with slats for drainage (factory installed) Installed on Right side wall Available finishes: White **(WH)**, Teak**(TK)**,	$ 925
1S3221PHWR		$ 925
SMSOAPDISH	Small soap dish shipped loose	$ 188
LGSOAPDISH	Large soap dish shipped loose	$ 264
1VAL300	Single hand chrome pressure balancing mixing valve suitable for commercial use. One-piece ceramic cartridge. Maximum temperature limit stop Installed on right wall	$ 443
1VAL300	Single hand chrome pressure balancing mixing valve suitable for commercial use. One-piece ceramic cartridge. Maximum temperature limit stop Installed on left wall	$ 443
1SH0107COMPLETE	Handheld shower assembly with 30 inch slide bar and 60 inch hose. Installed on right wall	$ 417
1SH0107COMPLETE	Handheld shower assembly with 30 inch slide bar and 60 inch hose. Installed on left wall	$ 417
1CUR130	42 inch x 72 inch white premium weighted shower curtain Shipped loose	$ 262
TRENCHMAT	Underaly ramp for trench drain shower models Quantity of (2)	$ 405
M-36WGRATE	Optional powder coated white trench grate. Unit comes standard with Stainless Steel.	$ 1041
36SHFWBALL	Extra reinforcement for after market accessories installment on all walls.	$ 250
1BAR109W	Stainless steel accessible 18 inch vertical grab bar, 1-1/4 inch diameter, concealed flanges All grab bars are factory installed and not sold separately. Available finishes: Stainless Steel**(SS)**, Powder Coated White **(W)**	$ 237

OPTIONS

SKU	Description	MSRP
1BAR109SS	Stainless steel accessible 18 inch vertical grab bar, 1-1/4 inch diameter, concealed flanges All grab bars are factory installed and not sold separately. Available finishes: Stainless Steel**(SS)**, Powder Coated White **(W)**	$ 186
S7030LCUSHR	White fold-up L-shaped cushioned seat (factory installed) Installed on Right side wall	$ 889
1ROD114SS	1” diameter Stainless Steel curtain rod	$ 125

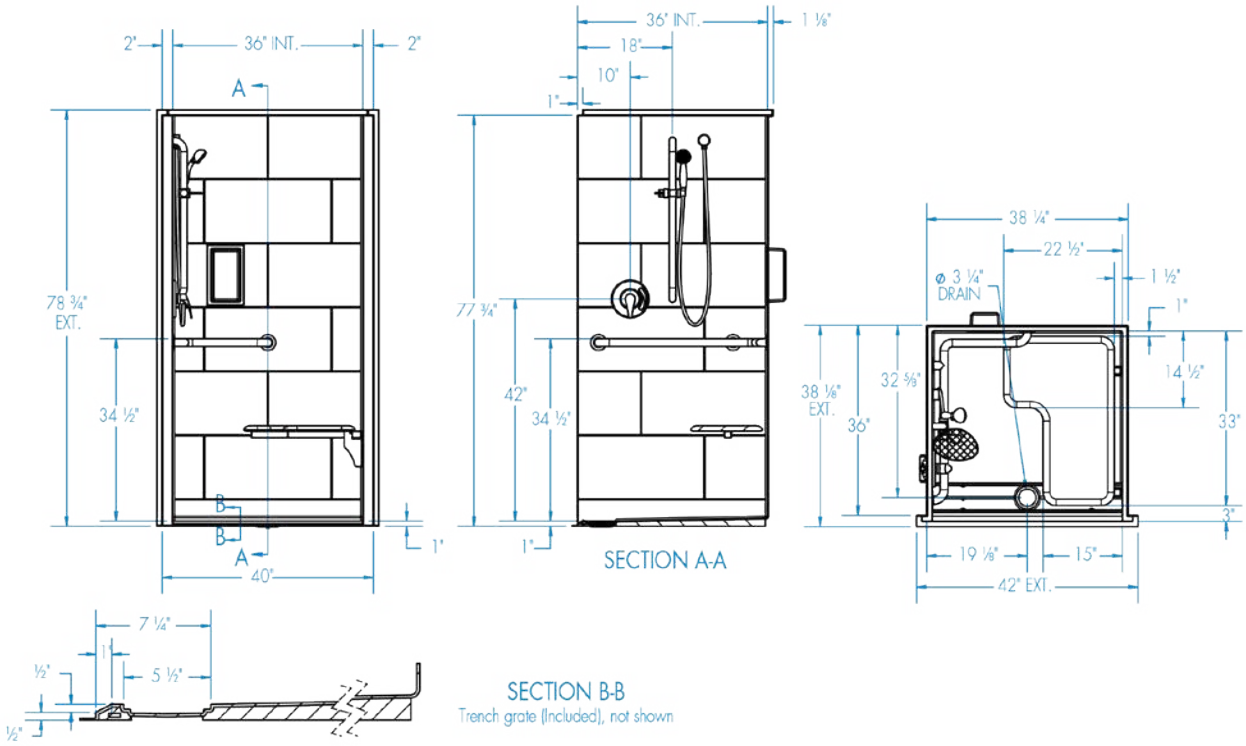
2"
36" INT.
2"
A
78 ¾"
EXT.
34 ½"
B
B
A
1"
40"
36" INT.
1 ⅛"
18"
10"
1"
77 ¾"
42"
34 ½"
1"
SECTION A-A
38 ¼"
22 ½"
1 ½"
Ø 3 ¼"
DRAIN
1"
14 ½"
38 ⅛"
EXT.
32 ⅝"
36"
33"
3"
19 ⅛"
15"
42" EXT.
7 ¼"
1"
½"
5 ½"
½"
SECTION B-B
Trench grate (Included), not shown

13636BFSCTTR



Material : AcrylX™

Features

- 1-Piece shower
- AcrylX™ applied acrylic surface
- 1-1⁄8 Inch skirt
- Barrier free when properly installed
- Smooth large 12 Inch x 24 Inch subway tile wall
- Center front drain outlet
- Integral front trench drain
- Level Base
- Interior dimensions: 36 Inches x 36 Inches x 76-3/4 Inches
- Exterior dimensions: 42 Inches x 38-1/8 Inches x 78-3/4 Inches
- Stainless steel grate

13636BFSCTTR - PRICING CATEGORY : FL

SKU	Color	Configuration	Dimensions & Weight	MSRP
1363BFSCTTR-BI	Biscuit	Center Drain	36” x 36” x 76 3/4” / 140 lb 914mm x 914mm x 1949mm / 63.49 kg	Quote Only
1363BFSCTTR-BO	Bone			Quote Only
1363BFSCTTR-WH	White			Quote Only

13636BFSCTTR - ADA COMPLIANT CONFIGURATION

SKU	Color	Configuration	Dimensions & Weight	MSRP
1363BFSCTTR-BI	Biscuit	Center Drain ADA Compliant Configuration	36” x 36” x 76 3/4” / 140 lb 914mm x 914mm x 1949mm / 63.49 kg	Quote Only
1363BFSCTTR-BO	Bone			Quote Only
1363BFSCTTR-WH	White			Quote Only

13636BFSCTTR - ANSI COMPLIANT CONFIGURATION

SKU	Color	Configuration	Dimensions & Weight	MSRP
1363BFSCTTR-BI	Biscuit	Center Drain ANSI Compliant Configuration	36” x 36” x 76 3/4” / 140 lb 914mm x 914mm x 1949mm / 63.49 kg	Quote Only
1363BFSCTTR-BO	Bone			Quote Only
1363BFSCTTR-WH	White			Quote Only

13636BFSCTTR - L-BAR CONFIGURATION

SKU	Color	Configuration	Dimensions & Weight	MSRP
1363BFSCTTR-BI	Biscuit	Center Drain L-Bar Configuration	36” x 36” x 76 3/4” / 140 lb 914mm x 914mm x 1949mm / 63.49 kg	Quote Only
1363BFSCTTR-BO	Bone			Quote Only
1363BFSCTTR-WH	White			Quote Only

13636BFSCTTR - L-BAR CONFIGURATION AND FOLDING SEAT

SKU	Color	Configuration	Dimensions & Weight	MSRP
1363BFSCTTR-BI	Biscuit	Center Drain L-Bar Configuration and Folding Seat	36” x 36” x 76 3/4” / 140 lb 914mm x 914mm x 1949mm / 63.49 kg	Quote Only
1363BFSCTTR-BO	Bone			Quote Only
1363BFSCTTR-WH	White			Quote Only

OPTIONS

SKU	Description	MSRP
4200BRASDRSF	2” Brass Surefit Joint Shower Drain Brass drain material Snap in strainer-stainless steel No-caulk connection.	$ 48
1S3221PDL	White fold-up L-shaped cushioned seat (factory installed) Installed on Left side wall	$ 889
1S3221PDR	White fold-up L-shaped cushioned seat (factory installed) Installed on Right side wall	$ 889
1S3221PHWL	Solid fold-up phenolic seat with slats for drainage (factory installed) Installed on Left side wall Available finishes: White **(WH)**, Teak**(TK)**,	$ 925
1S3221PHL		$ 925
1S3221PHR	Solid fold-up phenolic seat with slats for drainage (factory installed) Installed on Right side wall Available finishes: White **(WH)**, Teak**(TK)**,	$ 925
1S3221PHWR		$ 925
SMSOAPDISH	Small soap dish shipped loose	$ 188
LGSOAPDISH	Large soap dish shipped loose	$ 264
1VAL300	Single hand chrome pressure balancing mixing valve suitable for commercial use. One-piece ceramic cartridge. Maximum temperature limit stop Installed on right wall	$ 443
1VAL300	Single hand chrome pressure balancing mixing valve suitable for commercial use. One-piece ceramic cartridge. Maximum temperature limit stop Installed on left wall	$ 443
1SH0107COMPLETE	Handheld shower assembly with 30 inch slide bar and 60 inch hose. Installed on right wall	$ 417
1SH0107COMPLETE	Handheld shower assembly with 30 inch slide bar and 60 inch hose. Installed on left wall	$ 417
1CUR130	42 inch x 72 inch white premium weighted shower curtain Shipped loose	$ 262
M-36WGRATE	Optional powder coated white trench grate. Unit comes standard with Stainless Steel.	$ 1041
36SHFWBALL	Extra reinforcement for after market accessories installment on all walls.	$ 250
1BAR109W	Stainless steel accessible 18 inch vertical grab bar, 1-1/4 inch diameter, concealed flanges All grab bars are factory installed and not sold separately. Available finishes: Stainless Steel**(SS)**, Powder Coated White **(W)**	$ 237
1BAR109SS		$ 186
S7030LCUSHR	White fold-up L-shaped cushioned seat (factory installed) Installed on Right side wall	$ 889
1ROD114SS	1” diameter Stainless Steel curtain rod	$ 125

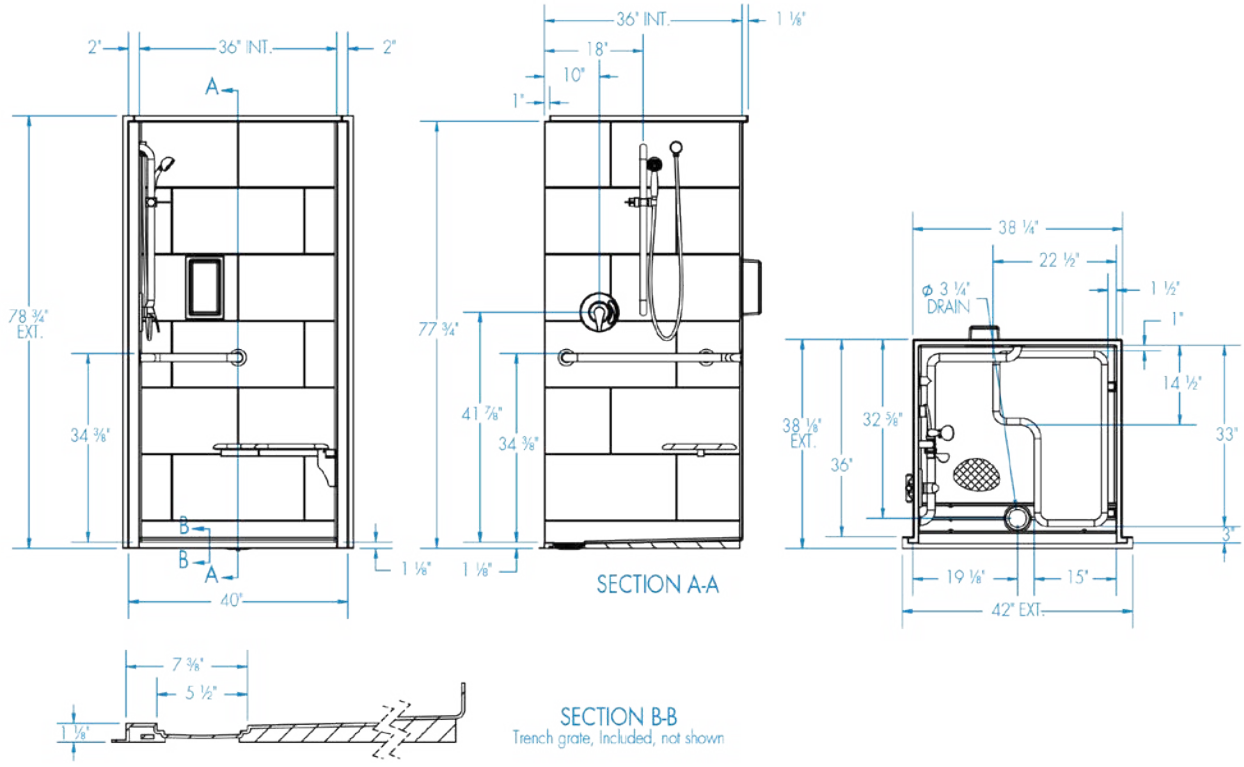
2"
36" INT.
2"
A
78 ¾"
EXT.
34 ⅜"
B
B
A
40"
1 ⅛"
36" INT.
1 ⅛"
18"
10"
1"
77 ¾"
41 ⅞"
34 ⅜"
1 ⅛"
1 ⅛"
SECTION A-A
38 ¼"
22 ½"
Ø 3 ¼"
DRAIN
1 ½"
1"
14 ½"
38 ⅛"
EXT.
32 ⅝"
36"
33"
3"
19 ⅛"
15"
42" EXT.
7 ⅜"
5 ½"
1 ⅛"
SECTION B-B
Trench grate, Included, not shown

13636FHARFR/L





Material : AcrylX™

Features

- 1-piece shower
- FHA/ANSI B Compliant
- Low threshold -3-1/2 Inch skirt
- Smooth wall is easy to clean
- Return flange on left or right
- Slip-resistant textured floor for safety
- Interior dimensions: 36 Inches x 36 Inches x 77 Inches
- Exterior dimensions: 38-1/2 Inches x 39-1/2 Inches x 79 Inches

13636FHARFR/L - PRICING CATEGORY : FL

SKU	Color	Configuration	Dimensions & Weight	MSRP
13636FHARFL-AL	Almond	Base Model with Left Flange, Center Drain	36” x 36” x 77” / 90 lb 914mm x 914mm x 1956mm / 40.82 kg	$ 1806
13636FHARFL-BI	Biscuit			$ 1806
13636FHARFL-BO	Bone			$ 1806
13636FHARFL-WH	White			$ 1771
13636FHARFR-AL	Almond	Base Model with Right Flange, Center Drain		$ 1806
13636FHARFR-BI	Biscuit			$ 1806
13636FHARFR-BO	Bone			$ 1806
13636FHARFR-WH	White			$ 1771

OPTIONS

SKU	Description	MSRP
4200BRASDRSF	2” Brass Surefit Joint Shower Drain Brass drain material Snap in strainer-stainless steel No-caulk connection.	$ 48
1BAR140W	Stainless steel accessible 24 inch grab bar, 1-1/4 inch diameter, concealed flanges Custom location installation; drawing required. All grab bars are factory installed and not sold separately. Not all bars available on all units, consult customer care. Available finishes: Stainless Steel**(SS)**, Powder Coated White **(W)**,	$ 271
1BAR140SS	Stainless steel accessible 24 inch grab bar, 1-1/4 inch diameter, concealed flanges Custom location installation; drawing required. All grab bars are factory installed and not sold separately. Not all bars available on all units, consult customer care. Available finishes: Stainless Steel**(SS)**, Powder Coated White **(W)**,	$ 226

OPTIONS

SKU	Description	MSRP
1BAR903SS	Stainless steel accessible L-shaped grab bar. 18 x 32 inches , 1-1/4 inch diameter, concealed flanges Custom location installation; drawing required. All grab bars are factory installed and not sold separately. Not all bars available on all units, consult customer care. Available finishes: Stainless Steel**(SS)**, Powder Coated White **(W)**,	$ 319
1BAR459W		$ 482
7175DISH	Stainless steel soap dish	$ 119
1VAL300	Single hand chrome pressure balancing mixing valve suitable for commercial use. One-piece ceramic cartridge. Maximum temperature limit stop Installed on right wall	$ 443
1VAL300	Single hand chrome pressure balancing mixing valve suitable for commercial use. One-piece ceramic cartridge. Maximum temperature limit stop Installed on left wall	$ 443
1VAL300	Single hand chrome pressure balancing mixing valve suitable for commercial use. One-piece ceramic cartridge. Maximum temperature limit stop Installed on back wall	$ 443
1SH0107COMPLETE	Handheld shower assembly with 30 inch slide bar and 60 inch hose. Installed on right wall	$ 417
1SH0107COMPLETE	Handheld shower assembly with 30 inch slide bar and 60 inch hose. Installed on left wall	$ 417
1SH0107COMPLETE	Handheld shower assembly with 30 inch slide bar and 60 inch hose. Installed on back wall	$ 417
S7336ROD	1” diameter Stainless Steel curtain rod	$ 76
36CURTAIN	Curtain for 36” model Shipped loose	$ 101
35RKBO	Finish repair kit - Case of 12 Available in White **(WH)**, or Bone **(BO)**,	$ 303
35RKWH		$ 303
S7036LPHENL	Fold-up phenolic seat (factory installed) Installed on Left side wall Available finishes: White **(WH)**, Teak**(TK)**	$ 925
S7036LPHENWHL		$ 925
S7036LPHENR		$ 925
S7036LPHENWHR		$ 925
S7036LCUSHL	White fold-up L-shaped cushioned seat (factory installed) Installed on Left side wall	$ 889
S7036LCUSHR	White fold-up L-shaped cushioned seat (factory installed) Installed on Right side wall	$ 889

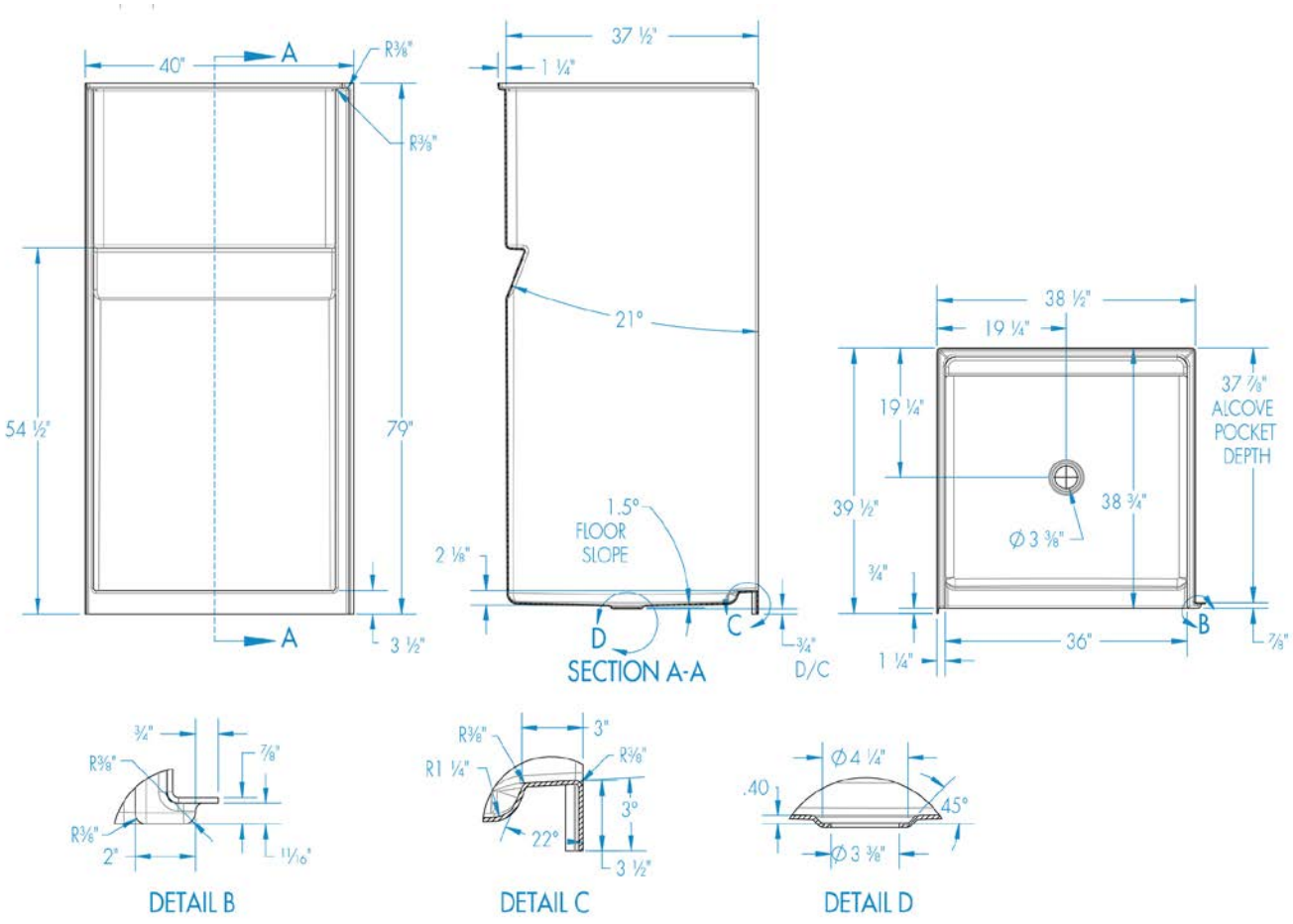
40"
A
R3⁄8"
R3⁄8"
54 1⁄2"
79"
A
3 1⁄2"
37 1⁄2"
1 1⁄4"
21°
1.5°
FLOOR
SLOPE
2 1⁄8"
D
C
3⁄4"
D/C
SECTION A-A
38 1⁄2"
19 1⁄4"
19 1⁄4"
37 7⁄8"
ALCOVE
POCKET
DEPTH
39 1⁄2"
38 3⁄4"
Ø 3 3⁄8"
3⁄4"
B
36"
1 1⁄4"
7⁄8"
3⁄4"
R3⁄8"
7⁄8"
R3⁄8"
2"
11⁄16"
DETAIL B
R3⁄8"
3"
R1 1⁄4"
R3⁄8"
3°
22°
3 1⁄2"
DETAIL C
Ø 4 1⁄4"
.40
45°
Ø 3 3⁄8"
DETAIL D

13636FHARRF



Material : AcrylX™

Features

- 1-piece shower
- FHA/ANSI B Compliant
- Low threshold -3-1/2 Inch skirt
- Smooth wall is easy to clean
- Return flanges on both sides
- Slip-resistant textured floor for safety
- Interior dimensions: 36 Inches x 36 Inches x 77-1/4 Inches
- Exterior dimensions: 41-1/2 Inches x 39-3/8 Inches x 79 Inches

13636FHARRF - PRICING CATEGORY : FL

SKU	Color	Configuration	Dimensions & Weight	MSRP
13636FHARRF-AL	Almond	Center Drain	36” x 36” x 77 1/4” / 90 lb 914mm x 914mm x 1962mm / 40.82 kg	$ 1806
13636FHARRF-BI	Biscuit			$ 1806
13636FHARRF-BO	Bone			$ 1806
13636FHARRF-WH	White			$ 1771

OPTIONS

SKU	Description	MSRP
4200BRASDRSF	2” Brass Surefit Joint Shower Drain Brass drain material Snap in strainer-stainless steel No-caulk connection.	$ 48
1BAR140W	Stainless steel accessible 24 inch grab bar, 1-1/4 inch diameter, concealed flanges Custom location installation; drawing required. All grab bars are factory installed and not sold separately. Not all bars available on all units, consult customer care. Available finishes: Stainless Steel**(SS)**, Powder Coated White **(W)**,	$ 271
1BAR140SS	Stainless steel accessible 24 inch grab bar, 1-1/4 inch diameter, concealed flanges Custom location installation; drawing required. All grab bars are factory installed and not sold separately. Not all bars available on all units, consult customer care. Available finishes: Stainless Steel**(SS)**, Powder Coated White **(W)**,	$ 226
1BAR903SS	Stainless steel accessible L-shaped grab bar. 18 x 32 inches , 1-1/4 inch diameter, concealed flanges Custom location installation; drawing required. All grab bars are factory installed and not sold separately. Not all bars available on all units, consult customer care. Available finishes: Stainless Steel**(SS)**, Powder Coated White **(W)**,	$ 319
1BAR459W		$ 482
7175DISH	Stainless steel soap dish	$ 119
1VAL300	Single hand chrome pressure balancing mixing valve suitable for commercial use. One-piece ceramic cartridge. Maximum temperature limit stop Installed on right wall	$ 443

OPTIONS

SKU	Description	MSRP
1VAL300	Single hand chrome pressure balancing mixing valve suitable for commercial use. One-piece ceramic cartridge. Maximum temperature limit stop Installed on left wall	$ 443
1SH0107COMPLETE	Handheld shower assembly with 30 inch slide bar and 60 inch hose. Installed on right wall	$ 417
1SH0107COMPLETE	Handheld shower assembly with 30 inch slide bar and 60 inch hose. Installed on left wall	$ 417
S7336ROD	1” diameter Stainless Steel curtain rod	$ 76
36CURTAIN	Curtain for 36” model Shipped loose	$ 101
35RKBO	Finish repair kit - Case of 12 Available in White **(WH)**, or Bone **(BO)**,	$ 303
35RKWH		$ 303
S7036LPHENL	Fold-up phenolic seat (factory installed) Installed on Left side wall Available finishes: White **(WH)**, Teak**(TK)**	$ 925
S7036LPHENWHL		$ 925
S7036LPHENR		$ 925
S7036LPHENWHR		$ 925
S7036LCUSHL	White fold-up L-shaped cushioned seat (factory installed) Installed on Left side wall	$ 889
S7036LCUSHR	White fold-up L-shaped cushioned seat (factory installed) Installed on Right side wall	$ 889

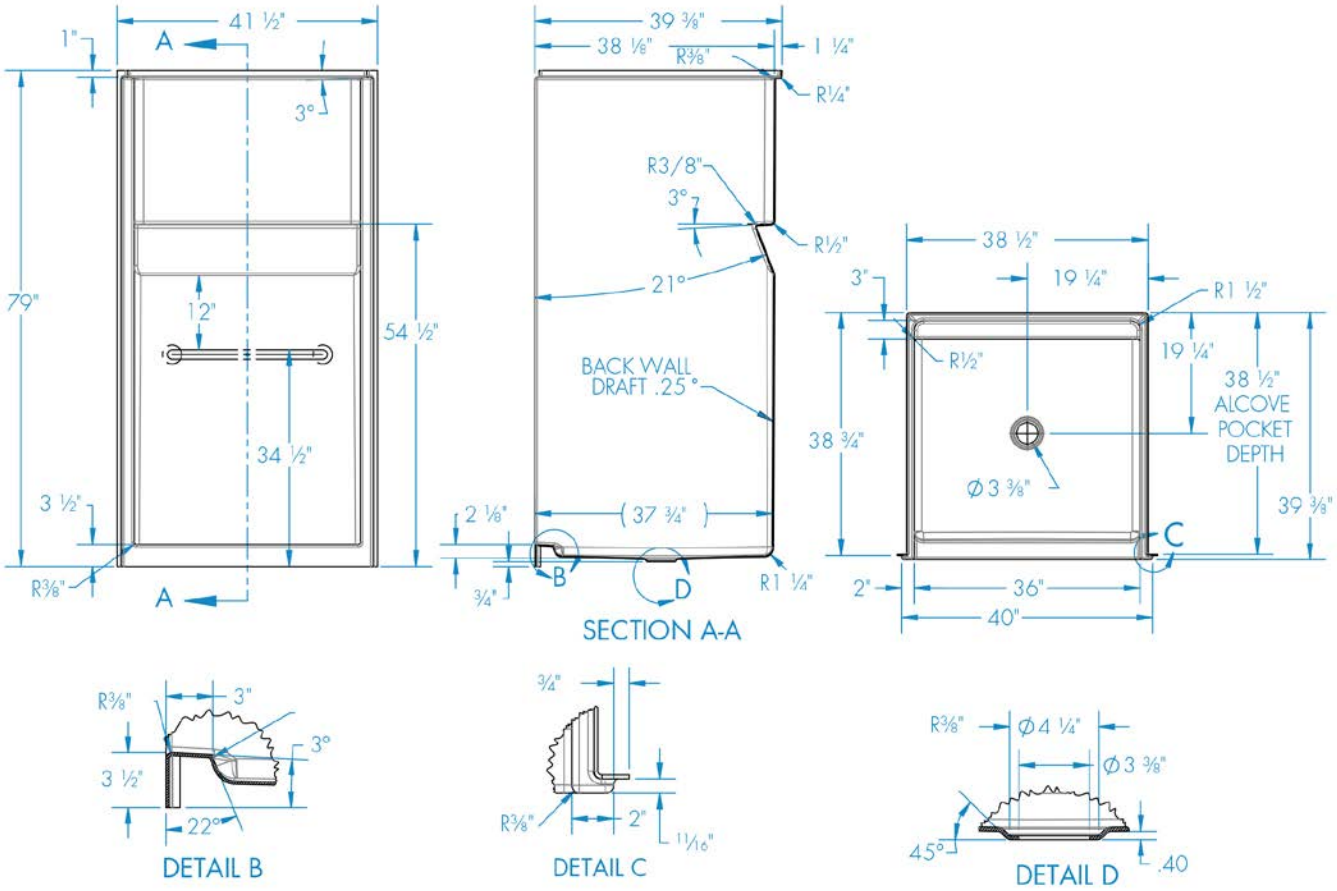

DETAIL B

DETAIL C

DETAIL D

1363BFC2P





Material : AcrylX™

Features

- 2-Piece shower
- Pre-leveled base
- 3/4 Inch skirt
- No interior threshold
- Barrier free when properly installed
- 2-piece
- Smooth wall is easy to clean
- Center drain
- Interior dimensions: 36 Inches x 36 Inches x 75-1/8 Inches
- Exterior dimensions: 39 Inches x 38-3/4 Inches x 77-1/8 Inches
- AcrylX™ applied acrylic surface

1363BFC2P - PRICING CATEGORY : FL

SKU	Color	Configuration	Dimensions & Weight	MSRP
1363BFC2P-AL	Almond	Center Drain	36” x 36” x 75 1/8” / 141 lb 914mm x 914mm x 1908mm / 63.95 kg	$ 1972
1363BFC2P-BI	Biscuit			$ 1972
1363BFC2P-BO	Bone			$ 1972
1363BFC2P-WH	White			$ 1937

1363BFC2P - L-BAR CONFIGURATION

SKU	Color	Configuration	Dimensions & Weight	MSRP
1363BFC2P-AL	Almond	Center Drain L-Bar Configuration	36” x 36” x 75 1/8” / 141 lb 914mm x 914mm x 1908mm / 63.95 kg	$ 2291
1363BFC2P-BI	Biscuit			$ 2291
1363BFC2P-BO	Bone			$ 2291
1363BFC2P-WH	White			$ 2256

1363BFC2P - L-BAR CONFIGURATION AND FOLDING SEAT

SKU	Color	Configuration	Dimensions & Weight	MSRP
1363BFC2P-AL	Almond	Center Drain L-Bar Configuration and Folding Seat	36” x 36” x 75 1/8” / 141 lb 914mm x 914mm x 1908mm / 63.95 kg	$ 3180
1363BFC2P-BI	Biscuit			$ 3180
1363BFC2P-BO	Bone			$ 3180
1363BFC2P-WH	White			$ 3145

1363BFC2P - L-BAR CONFIGURATION, FOLDING SEAT, VERTICAL ENTRY BAR AND HANDHELD SPRAYER

SKU	Color	Configuration	Dimensions & Weight	MSRP
1363BFC2P-AL	Almond	Center Drain L-Bar Configuration, Folding Seat, Vertical Entry Bar and Handheld Sprayer	36” x 36” x 75 1/8” / 141 lb 914mm x 914mm x 1908mm / 63.95 kg	$ 4226
1363BFC2P-BI	Biscuit			$ 4226
1363BFC2P-BO	Bone			$ 4226
1363BFC2P-WH	White			$ 4191

OPTIONS

SKU	Description	MSRP
4200BRASDRSF	2” Brass Surefit Joint Shower Drain Brass drain material Snap in strainer-stainless steel No-caulk connection.	$ 48
7175DISH	Stainless steel soap dish	$ 119
1VAL300	Single hand chrome pressure balancing mixing valve suitable for commercial use. One-piece ceramic cartridge. Maximum temperature limit stop Installed on right wall	$ 443
1VAL300	Single hand chrome pressure balancing mixing valve suitable for commercial use. One-piece ceramic cartridge. Maximum temperature limit stop Installed on left wall	$ 443
1SH0107COMPLETE	Handheld shower assembly with 30 inch slide bar and 60 inch hose. Installed on right wall	$ 417
1SH0107COMPLETE	Handheld shower assembly with 30 inch slide bar and 60 inch hose. Installed on left wall	$ 417
S7336ROD	1” diameter Stainless Steel curtain rod	$ 76
36CURTAIN	Curtain for 36” model Shipped loose	$ 101
VINYLDAM	Vinyl dam for barrier free showers. Ideal for water containment.	$ 125
THRESHOLD	Removable threshold for barrier free showers. Ideal for water containment.	$ 187
35RKBO	Finish repair kit - Case of 12 Available in White **(WH)**, or Bone **(BO)**,	$ 303
35RKWH		$ 303
1BAR109W	Stainless steel accessible 18 inch vertical grab bar, 1-1/4 inch diameter, concealed flanges All grab bars are factory installed and not sold separately. Available finishes: Stainless Steel**(SS)**, Powder Coated White **(W)**	$ 237
1BAR109SS		$ 186
S7036LPHENL	Fold-up phenolic seat (factory installed) Installed on Left side wall Available finishes: White **(WH)**, Teak**(TK)**	$ 925
S7036LPHENWHL		$ 925
S7036LPHENR		$ 925
S7036LPHENWHR		$ 925
S7036LCUSHL	White fold-up L-shaped cushioned seat (factory installed) Installed on Left side wall	$ 889
S7036LCUSHR	White fold-up L-shaped cushioned seat (factory installed) Installed on Right side wall	$ 889
S1363GBARST	Stainless steel accessible L-shaped grab bar. 18 x 32 inches ,1-1/4 inch diameter, concealed flanges All grab bars are factory installed and not sold separately. Available finishes: Stainless Steel**(SS)**	$ 319

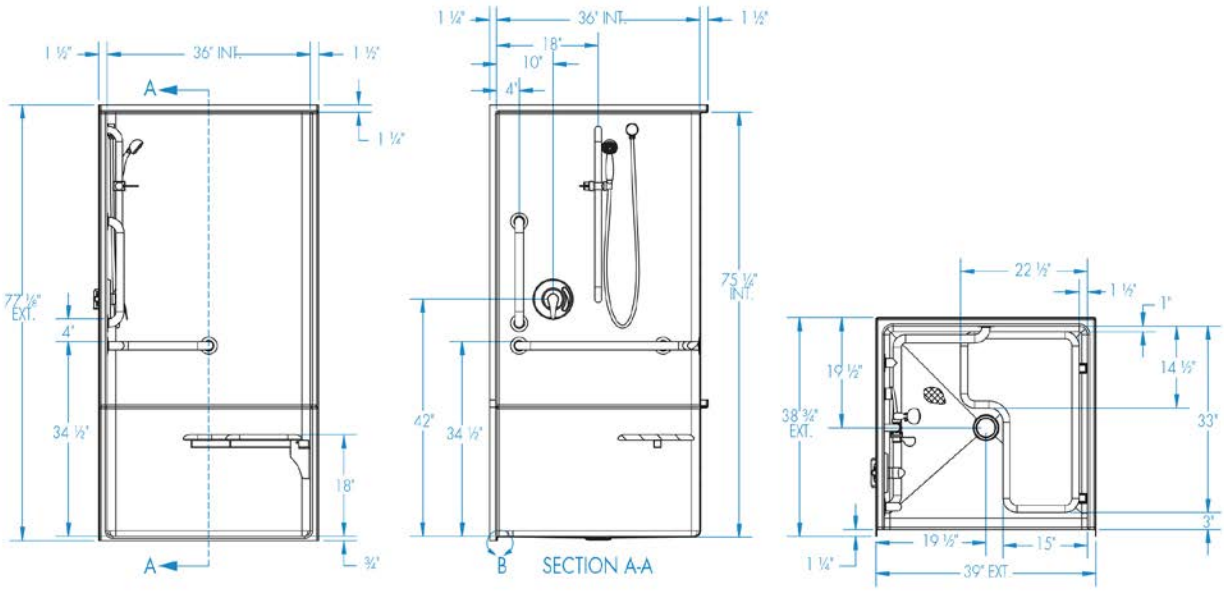
1 ½"
36" INT.
1 ½"
A
1 ¼"
77 ⅛" EXT.
4"
34 ½"
18"
¾"
A
1 ¼"
36" INT.
1 ½"
18"
10"
4"
75 ¼" INT.
42"
34 ½"
B
SECTION A-A
22 ½"
1 ½"
1"
14 ½"
10 ½"
38 ¾" EXT.
33"
3"
19 ½"
15"
1 ¼"
39" EXT.

1363BFRF





Material : AcrylX™

Features

- 1-Piece Shower
- Pre-leveled base
- 3/4 Inch skirt
- No interior threshold
- Barrier free when properly installed
- Smooth wall is easy to clean
- Slip resistant, textured bottom
- Center drain
- Interior dimensions: 36 Inches x 36 Inches x 75 Inches
- Exterior dimensions: 43-1/2 Inches x 38 Inches x 77 Inches
- AcrylX™ applied acrylic surface

1363BFRF - PRICING CATEGORY : FL

SKU	Color	Configuration	Dimensions & Weight	MSRP
1363BFRF-AL	Almond	Center Drain	36” x 36” x 75 1/4” / 140 lb 914mm x 914mm x 1911mm / 63.49 kg	$ 1649
1363BFRF-BI	Biscuit			$ 1649
1363BFRF-BO	Bone			$ 1649
1363BFRF-WH	White			$ 1614

1363BFRF - ADA COMPLIANT CONFIGURATION

SKU	Color	Configuration	Dimensions & Weight	MSRP
1363BFRF-AL	Almond	Center Drain ADA Compliant Configuration	36” x 36” x 75 1/4” / 140 lb 914mm x 914mm x 1911mm / 63.49 kg	$ 3717
1363BFRF-BI	Biscuit			$ 3717
1363BFRF-BO	Bone			$ 3717
1363BFRF-WH	White			$ 3682

1363BFRF - ANSI COMPLIANT CONFIGURATION

SKU	Color	Configuration	Dimensions & Weight	MSRP
1363BFRF-AL	Almond	Center Drain ANSI Compliant Configuration	36” x 36” x 75 1/4” / 140 lb 914mm x 914mm x 1911mm / 63.49 kg	$ 3903
1363BFRF-BI	Biscuit			$ 3903
1363BFRF-BO	Bone			$ 3903
1363BFRF-WH	White			$ 3868

1363BFRF - L-BAR CONFIGURATION

SKU	Color	Configuration	Dimensions & Weight	MSRP
1363BFRF-AL	Almond	Center Drain L-Bar Configuration	36” x 36” x 75 1/4” / 140 lb 914mm x 914mm x 1911mm / 63.49 kg	$ 1968
1363BFRF-BI	Biscuit			$ 1968
1363BFRF-BO	Bone			$ 1968
1363BFRF-WH	White			$ 1933

1363BFRF - L-BAR CONFIGURATION AND FOLDING SEAT

SKU	Color	Configuration	Dimensions & Weight	MSRP
1363BFRF-AL	Almond	Center Drain L-Bar Configuration and Folding Seat	36” x 36” x 75 1/4” / 140 lb 914mm x 914mm x 1911mm / 63.49 kg	$ 1968
1363BFRF-BI	Biscuit			$ 2857
1363BFRF-BO	Bone			$ 2857
1363BFRF-WH	White			$ 2822

1363BFRFMA - ETCHED L-BAR CONFIGURATION

SKU	Color	Configuration	Dimensions & Weight	MSRP
1363BFRFMA-AL	Almond	Center Drain Etched L-Bar Configuration	36” x 36” x 75 1/4” / 140 lb 914mm x 914mm x 1911mm / 63.49 kg	$ 2127
1363BFRFMA-BI	Biscuit			$ 2127
1363BFRFMA-BO	Bone			$ 2127
1363BFRFMA-WH	White			$ 2092

1363BFRFMA - ETCHED L-BAR CONFIGURATION AND FOLDING SEAT

SKU	Color	Configuration	Dimensions & Weight	MSRP
1363BFRFMA-AL	Almond	Center Drain Etched L-Bar Configuration and Folding Seat	36” x 36” x 75 1/4” / 140 lb 914mm x 914mm x 1911mm / 63.49 kg	$ 3016
1363BFRFMA-BI	Biscuit			$ 3016
1363BFRFMA-BO	Bone			$ 3016
1363BFRFMA-WH	White			$ 2981

1363BFRFMA - MAS 521 CMR COMPLIANT CONFIGURATION

SKU	Color	Configuration	Dimensions & Weight	MSRP
1363BFRFMA-AL	Almond	Center Drain MAS 521 CMR Compliant Configuration	36” x 36” x 75 1/4” / 140 lb 914mm x 914mm x 1911mm / 63.49 kg	$ 3876
1363BFRFMA-BI	Biscuit			$ 3876
1363BFRFMA-BO	Bone			$ 3876
1363BFRFMA-WH	White			$ 3841

OPTIONS

SKU	Description	MSRP
4200BRASDRSF	2” Brass Surefit Joint Shower Drain Brass drain material Snap in strainer-stainless steel No-caulk connection.	$ 48
7175DISH	Stainless steel soap dish	$ 119
S4030SHRVLV-R	Single hand chrome pressure balancing mixing valve suitable for commercial use. One-piece ceramic cartridge. Maximum temperature limit stop Installed on right wall	$ 443
S4030SHRVLV-L	Single hand chrome pressure balancing mixing valve suitable for commercial use. One-piece ceramic cartridge. Maximum temperature limit stop Installed on left wall	$ 443
S4032MASS-R	Handheld shower assembly with 30 inch slide bar and 60 inch hose. MASS compliant Installed on right wall	$ 417
S4032MASS-L	Handheld shower assembly with 30 inch slide bar and 60 inch hose. MASS compliant Installed on left wall	$ 417
S7336ROD	1” diameter Stainless Steel curtain rod	$ 76
36CURTAIN	Curtain for 36” model Shipped loose	$ 101
VINYLDAM	Vinyl dam for barrier free showers. Ideal for water containment.	$ 125
THRESHOLD	Removable threshold for barrier free showers. Ideal for water containment.	$ 187
35RKBO	Finish repair kit - Case of 12 Available in White **(WH)**, or Bone **(BO)**,	$ 303
35RKWH		$ 303
S73030EGRAB	MASS Compliant Stainless Steel etched accessible 30 inch grab bar, 1-1/4 inch diameter L-configured (2) bars All grab bars are factory installed and not sold separately. Available finishes: Stainless Steel**(SS)**	$ 478
S7032PHENL	Rectangular fold-up phenolic seat (factory installed) MASS Compliant Installed on Left side wall Available finishes: White **(WH)**, Teak**(TK)**	$ 925
S7032PHENWL		$ 925
S7032PHENR	Rectangular fold-up phenolic seat (factory installed) MASS Compliant Installed on Right side wall Available finishes: White **(WH)**, Teak**(TK)**	$ 925
S7032PHENWR		$ 925
S7032CUSH-L	White fold-up rectangular cushioned seat (factory installed) MASS Compliant Installed on Left side wall	$ 889
S7032CUSH-R	White fold-up rectangular cushioned seat (factory installed) MASS Compliant Installed on Right side wall	$ 889

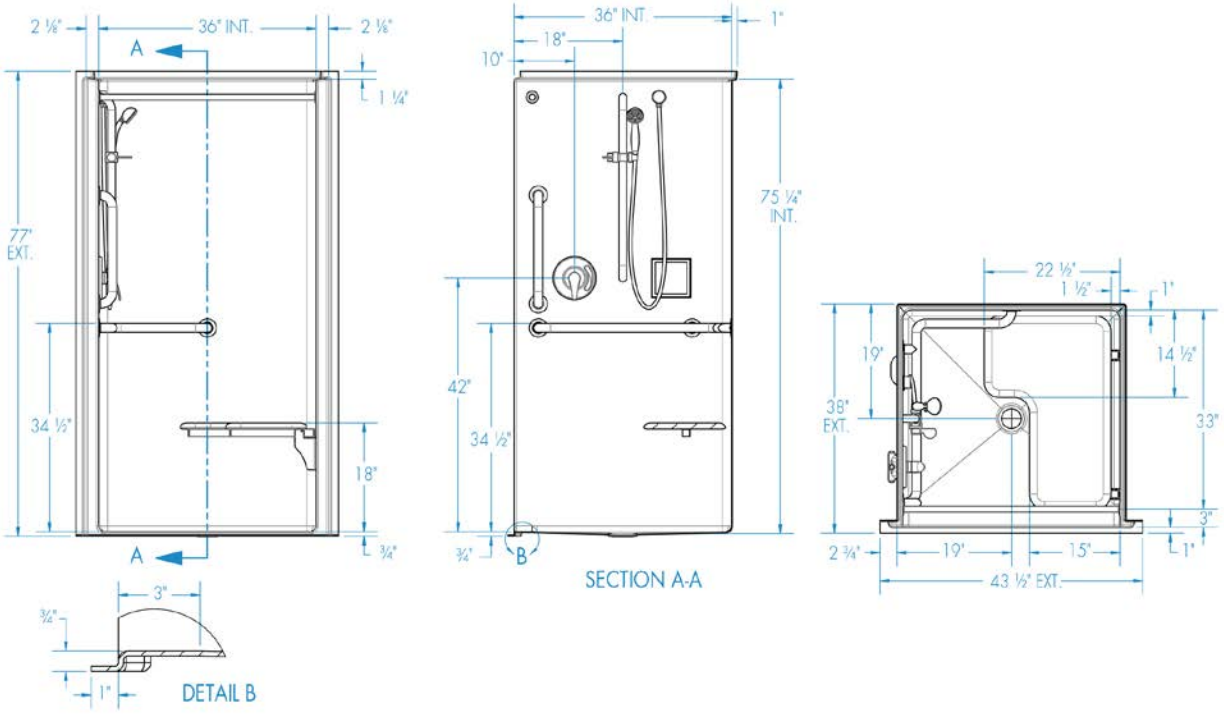
2 ⅛"
36" INT.
2 ⅛"
A
1 ¼"
77" EXT.
34 ½"
18"
¾"
A
3"
¾"
1"
DETAIL B
36" INT.
1"
18"
10"
75 ¼" INT.
42"
34 ½"
¾"
B
SECTION A-A
22 ⅛"
1 ½"
1"
19"
14 ½"
38" EXT.
33"
3"
1"
2 ¾"
19"
15"
43 ½" EXT.

1363BFS



Material : AcrylX™

Features

- 1-Piece shower
- Pre-leveled base
- 1 3/4 Inch skirt
- 1/2 Inch interior threshold
- Barrier free when properly installed
- Smooth wall is easy to clean
- Interior Dimensions: 36 Inches x 36 Inches x 74-1/8 Inches
- Exterior dimensions: 38 Inches x 38-1/4 Inches x 77-1/8 Inches
- AcrylX™ applied acrylic surface

1363BFS - PRICING CATEGORY : FL

SKU	Color	Configuration	Dimensions & Weight	MSRP
1363BFS-AL	Almond	Center Drain	36” x 36” x 74 1/8” / 142 lb 914mm x 914mm x 1883mm / 64.4 kg	$ 1610
1363BFS-BI	Biscuit			$ 1610
1363BFS-BO	Bone			$ 1610
1363BFS-WH	White			$ 1575

1363BFS - L-BAR CONFIGURATION

SKU	Color	Configuration	Dimensions & Weight	MSRP
1363BFS-AL	Almond	Center Drain L-Bar Configuration	36” x 36” x 74 1/8” / 142 lb 914mm x 914mm x 1883mm / 64.4 kg	$ 1929
1363BFS-BI	Biscuit			$ 1929
1363BFS-BO	Bone			$ 1929
1363BFS-WH	White			$ 1894

1363BFS - L-BAR CONFIGURATION AND FOLDING SEAT

SKU	Color	Configuration	Dimensions & Weight	MSRP
1363BFS-AL	Almond	Center Drain L-Bar Configuration and Folding Seat	36” x 36” x 74 1/8” / 142 lb 914mm x 914mm x 1883mm / 64.4 kg	$ 2818
1363BFS-BI	Biscuit			$ 2818
1363BFS-BO	Bone			$ 2818
1363BFS-WH	White			$ 2783

1363BFS - L-BAR CONFIGURATION, FOLDING SEAT, VERTICAL ENTRY BAR AND HANDHELD SPRAYER

SKU	Color	Configuration	Dimensions & Weight	MSRP
1363BFS-AL	Almond	Center Drain L-Bar Configuration, Folding Seat, Vertical Entry Bar and Handheld Sprayer	36” x 36” x 74 1/8” / 142 lb 914mm x 914mm x 1883mm / 64.4 kg	$ 3864
1363BFS-BI	Biscuit			$ 3864
1363BFS-BO	Bone			$ 3864
1363BFS-WH	White			$ 3829

OPTIONS

SKU	Description	MSRP
4200BRASDRSF	2” Brass Surefit Joint Shower Drain Brass drain material Snap in strainer-stainless steel No-caulk connection.	$ 48
7175DISH	Stainless steel soap dish	$ 119
1VAL300	Single hand chrome pressure balancing mixing valve suitable for commercial use. One-piece ceramic cartridge. Maximum temperature limit stop Installed on right wall	$ 443
1VAL300	Single hand chrome pressure balancing mixing valve suitable for commercial use. One-piece ceramic cartridge. Maximum temperature limit stop Installed on left wall	$ 443
1SH0107COMPLETE	Handheld shower assembly with 30 inch slide bar and 60 inch hose. Installed on right wall	$ 417
1SH0107COMPLETE	Handheld shower assembly with 30 inch slide bar and 60 inch hose. Installed on left wall	$ 417
S7336ROD	1” diameter Stainless Steel curtain rod	$ 76
36CURTAIN	Curtain for 36” model Shipped loose	$ 101
35RKBO	Finish repair kit - Case of 12 Available in White **(WH)**, or Bone **(BO)**,	$ 303
35RKWH		$ 303
1BAR109W	Stainless steel accessible 18 inch vertical grab bar, 1-1/4 inch diameter, concealed flanges All grab bars are factory installed and not sold separately. Available finishes: Stainless Steel**(SS)**, Powder Coated White **(W)**	$ 237
1BAR109SS		$ 186
S7036LPHENL	Fold-up phenolic seat (factory installed) Installed on Left side wall Available finishes: White **(WH)**, Teak**(TK)**	$ 925
S7036LPHENWHL		$ 925
S7036LPHENR		$ 925
S7036LPHENWHR		$ 925
S7036LCUSHL	White fold-up L-shaped cushioned seat (factory installed) Installed on Left side wall	$ 889
S7036LCUSHR	White fold-up L-shaped cushioned seat (factory installed) Installed on Right side wall	$ 889
S1363GBARST	Stainless steel accessible L-shaped grab bar. 18 x 32 inches ,1-1/4 inch diameter, concealed flanges All grab bars are factory installed and not sold separately. Available finishes: Stainless Steel**(SS)**	$ 319

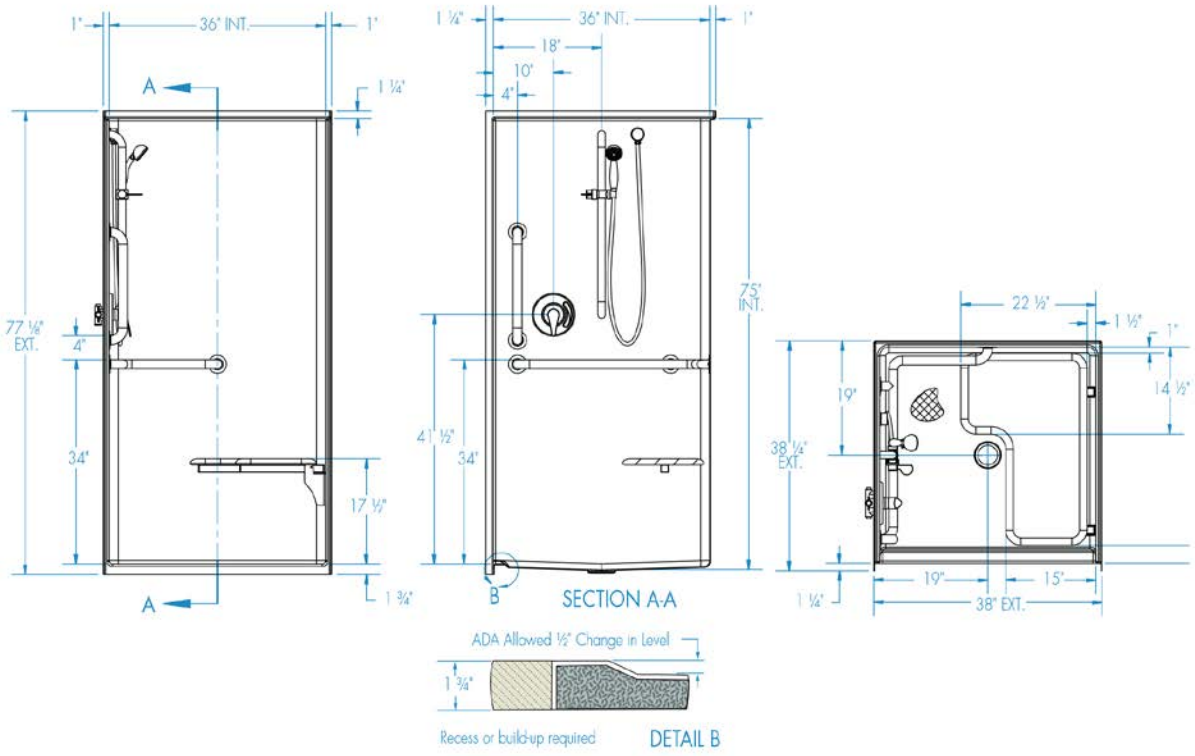
1"
36" INT.
1"
A
1 ¼"
77 ⅛" EXT.
4"
34"
17 ½"
1 ¾"
A
1 ¼"
36" INT.
1"
18"
10"
4"
75" INT.
41 ½"
34"
B
SECTION A-A
22 ½"
1 ½"
1"
14 ½"
19"
38 ¼" EXT.
19"
15"
1 ¼"
38" EXT.
ADA Allowed ½" Change in Level
1 ¾"
Recess or build-up required
DETAIL B

1363BFSC



Material : AcrylX™

Features

- 1-Piece shower
- Pre-leveled base
- 3/4 Inch skirt
- No interior threshold
- Barrier free when properly installed
- Smooth wall is easy to clean
- Center drain
- Interior dimensions: 36 Inches x 36 Inches x 75 Inches
- Exterior dimensions: 38 Inches x 38-1/4 Inches x 77 Inches
- AcrylX™ applied acrylic surface

1363BFSC - PRICING CATEGORY : FL

SKU	Color	Configuration	Dimensions & Weight	MSRP
1363BFSC--AL	Almond	Center Drain	36” x 36” x 75” / 140 lb 914mm x 914mm x 1905mm / 63.49 kg	$ 1585
1363BFSC-BI	Biscuit			$ 1585
1363BFSC-BO	Bone			$ 1585
1363BFSC-WH	White			$ 1550

1363BFSC - L-BAR CONFIGURATION

SKU	Color	Configuration	Dimensions & Weight	MSRP
1363BFSC--AL	Almond	Center Drain L-Bar Configuration	36” x 36” x 75” / 140 lb 914mm x 914mm x 1905mm / 63.49 kg	$ 1904
1363BFSC-BI	Biscuit			$ 1904
1363BFSC-BO	Bone			$ 1904
1363BFSC-WH	White			$ 1869

1363BFSC - L-BAR CONFIGURATION AND FOLDING SEAT

SKU	Color	Configuration	Dimensions & Weight	MSRP
1363BFSC--AL	Almond	Center Drain L-Bar Configuration and Folding Seat	36” x 36” x 75” / 140 lb 914mm x 914mm x 1905mm / 63.49 kg	$ 2793
1363BFSC-BI	Biscuit			$ 2793
1363BFSC-BO	Bone			$ 2793
1363BFSC-WH	White			$ 2758

1363BFSC - L-BAR CONFIGURATION, FOLDING SEAT, VERTICAL ENTRY BAR AND HANDHELD SPRAYER

SKU	Color	Configuration	Dimensions & Weight	MSRP
1363BFSC--AL	Almond	Center Drain L-Bar Configuration, Folding Seat, Vertical Entry Bar and Handheld Sprayer	36” x 36” x 75” / 140 lb 914mm x 914mm x 1905mm / 63.49 kg	$ 3839
1363BFSC-BI	Biscuit			$ 3839
1363BFSC-BO	Bone			$ 3839
1363BFSC-WH	White			$ 3804

OPTIONS

SKU	Description	MSRP
4200BRASDRSF	2” Brass Surefit Joint Shower Drain Brass drain material Snap in strainer-stainless steel No-caulk connection.	$ 48
7175DISH	Stainless steel soap dish	$ 119
1VAL300	Single hand chrome pressure balancing mixing valve suitable for commercial use. One-piece ceramic cartridge. Maximum temperature limit stop Installed on right wall	$ 443
1VAL300	Single hand chrome pressure balancing mixing valve suitable for commercial use. One-piece ceramic cartridge. Maximum temperature limit stop Installed on left wall	$ 443
1SH0107COMPLETE	Handheld shower assembly with 30 inch slide bar and 60 inch hose. Installed on right wall	$ 417
1SH0107COMPLETE	Handheld shower assembly with 30 inch slide bar and 60 inch hose. Installed on left wall	$ 417
S7336ROD	1” diameter Stainless Steel curtain rod	$ 76
36CURTAIN	Curtain for 36” model Shipped loose	$ 101
VINYLDAM	Vinyl dam for barrier free showers. Ideal for water containment.	$ 125
THRESHOLD	Removable threshold for barrier free showers. Ideal for water containment.	$ 187
35RKBO	Finish repair kit - Case of 12 Available in White **(WH)**, or Bone **(BO)**,	$ 303
35RKWH		$ 303
1BAR109W	Stainless steel accessible 18 inch vertical grab bar, 1-1/4 inch diameter, concealed flanges All grab bars are factory installed and not sold separately. Available finishes: Stainless Steel**(SS)**, Powder Coated White **(W)**	$ 237
1BAR109SS		$ 186
S7036LPHENL	Fold-up phenolic seat (factory installed) Installed on Left side wall Available finishes: White **(WH)**, Teak**(TK)**	$ 925
S7036LPHENWHL		$ 925
S7036LPHENR		$ 925
S7036LPHENWHR		$ 925
S7036LCUSHL	White fold-up L-shaped cushioned seat (factory installed) Installed on Left side wall	$ 889
S7036LCUSHR	White fold-up L-shaped cushioned seat (factory installed) Installed on Right side wall	$ 889
S1363GBARST	Stainless steel accessible L-shaped grab bar. 18 x 32 inches ,1-1/4 inch diameter, concealed flanges All grab bars are factory installed and not sold separately. Available finishes: Stainless Steel**(SS)**	$ 319

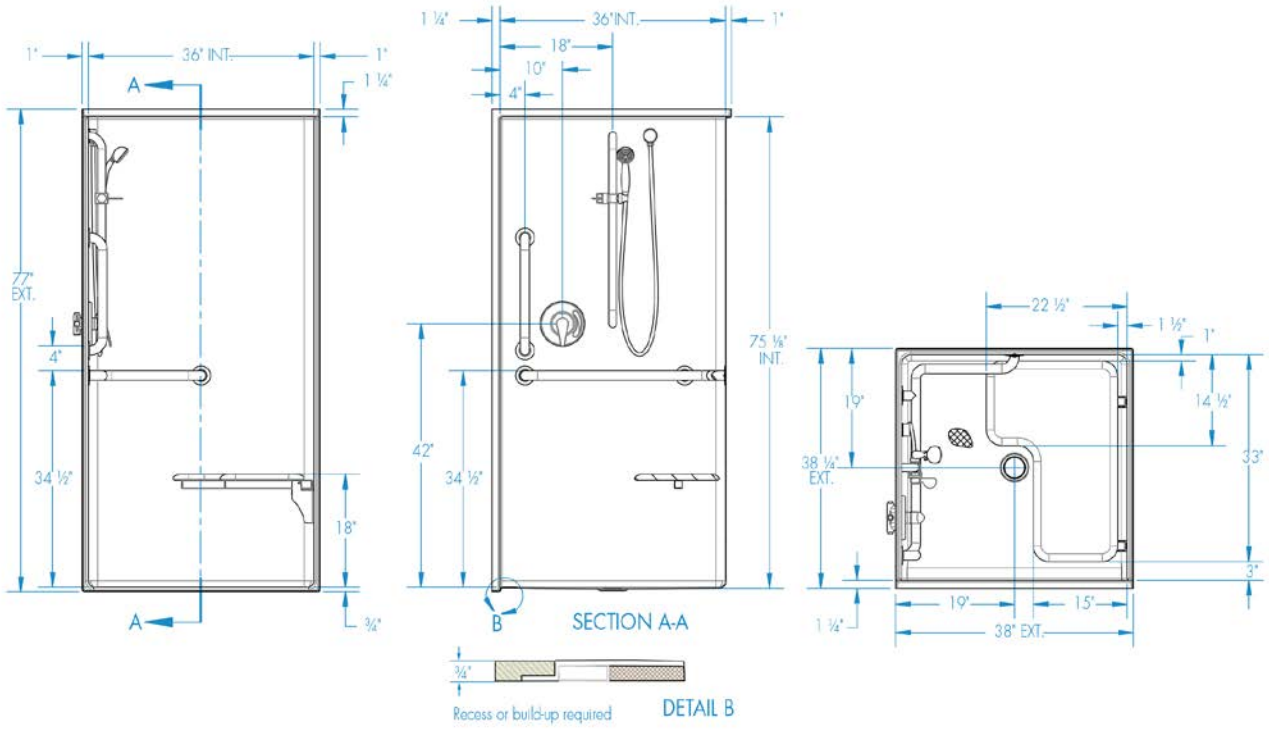
1"
36" INT.
1"
1 ¼"
A
77" EXT.
4"
34 ½"
18"
A
¾"
1 ¼"
36" INT.
1"
18"
10"
4"
75 ⅛" INT.
42"
34 ½"
B
SECTION A-A
¾"
Recess or build-up required
DETAIL B
22 ½"
1 ½"
1"
14 ½"
19"
38 ¼" EXT.
33"
3"
10"
15"
1 ¼"
38" EXT.

1363BFSCST





Material : AcrylX™

Features

- 1-Piece shower
- East zone only
- Pre-leveled base
- 3/4 Inch skirt
- No interior threshold
- Barrier free when properly installed
- Smooth tile
- Center drain
- Interior dimensions: 36 Inches x 36 Inches x 75 Inches
- Exterior dimensions: 38 Inches x 38-1/4 Inches x 77 Inches
- AcrylX™ applied acrylic surface

1363BFSCST - PRICING CATEGORY : FL

SKU	Color	Configuration	Dimensions & Weight	MSRP
1363BFSCST-AL	Almond	Center Drain	36” x 36” x 75” / 140 lb 914mm x 914mm x 1905mm / 63.49 kg	$ 1585
1363BFSCST-BI	Biscuit			$ 1585
1363BFSCST-BO	Bone			$ 1585
1363BFSCST-WH	White			$ 1550

1363BFSCST - L-BAR CONFIGURATION

SKU	Color	Configuration	Dimensions & Weight	MSRP
1363BFSCST-AL	Almond	Center Drain L-Bar Configuration	36” x 36” x 75” / 140 lb 914mm x 914mm x 1905mm / 63.49 kg	$ 1904
1363BFSCST-BI	Biscuit			$ 1904
1363BFSCST-BO	Bone			$ 1904
1363BFSCST-WH	White			$ 1869

1363BFSCST - L-BAR CONFIGURATION AND FOLDING SEAT

SKU	Color	Configuration	Dimensions & Weight	MSRP
1363BFSCST-AL	Almond	Center Drain L-Bar Configuration and Folding Seat	36” x 36” x 75” / 140 lb 914mm x 914mm x 1905mm / 63.49 kg	$ 2793
1363BFSCST-BI	Biscuit			$ 2793
1363BFSCST-BO	Bone			$ 2793
1363BFSCST-WH	White			$ 2758

1363BFSCST - L-BAR CONFIGURATION, FOLDING SEAT, VERTICAL ENTRY BAR AND HANDHELD SPRAYER

SKU	Color	Configuration	Dimensions & Weight	MSRP
1363BFSCST-AL	Almond	Center Drain L-Bar Configuration, Folding Seat, Vertical Entry Bar and Handheld Sprayer	36” x 36” x 75” / 140 lb 914mm x 914mm x 1905mm / 63.49 kg	$ 3839
1363BFSCST-BI	Biscuit			$ 3839
1363BFSCST-BO	Bone			$ 3839
1363BFSCST-WH	White			$ 3804

OPTIONS

SKU	Description	MSRP
4200BRASDRSF	2” Brass Surefit Joint Shower Drain Brass drain material Snap in strainer-stainless steel No-caulk connection.	$ 48
7175DISH	Stainless steel soap dish	$ 119
1VAL300	Single hand chrome pressure balancing mixing valve suitable for commercial use. One-piece ceramic cartridge. Maximum temperature limit stop Installed on right wall	$ 443
1VAL300	Single hand chrome pressure balancing mixing valve suitable for commercial use. One-piece ceramic cartridge. Maximum temperature limit stop Installed on left wall	$ 443
1SH0107COMPLETE	Handheld shower assembly with 30 inch slide bar and 60 inch hose. Installed on right wall	$ 417
1SH0107COMPLETE	Handheld shower assembly with 30 inch slide bar and 60 inch hose. Installed on left wall	$ 417
S7336ROD	1” diameter Stainless Steel curtain rod	$ 76
36CURTAIN	Curtain for 36” model Shipped loose	$ 101
VINYLDAM	Vinyl dam for barrier free showers. Ideal for water containment.	$ 125
THRESHOLD	Removable threshold for barrier free showers. Ideal for water containment.	$ 187
35RKBO	Finish repair kit - Case of 12 Available in White **(WH)**, or Bone **(BO)**,	$ 303
35RKWH		$ 303
1BAR109W	Stainless steel accessible 18 inch vertical grab bar, 1-1/4 inch diameter, concealed flanges All grab bars are factory installed and not sold separately. Available finishes: Stainless Steel**(SS)**, Powder Coated White **(W)**	$ 237
1BAR109SS		$ 186
S7036LPHENL	Fold-up phenolic seat (factory installed) Installed on Left side wall Available finishes: White **(WH)**, Teak**(TK)**	$ 925
S7036LPHENWHL		$ 925
S7036LPHENR		$ 925
S7036LPHENWHR		$ 925
S7036LCUSHL	White fold-up L-shaped cushioned seat (factory installed) Installed on Left side wall	$ 889
S7036LCUSHR	White fold-up L-shaped cushioned seat (factory installed) Installed on Right side wall	$ 889
S1363GBARST	Stainless steel accessible L-shaped grab bar. 18 x 32 inches ,1-1/4 inch diameter, concealed flanges All grab bars are factory installed and not sold separately. Available finishes: Stainless Steel**(SS)**	$ 319

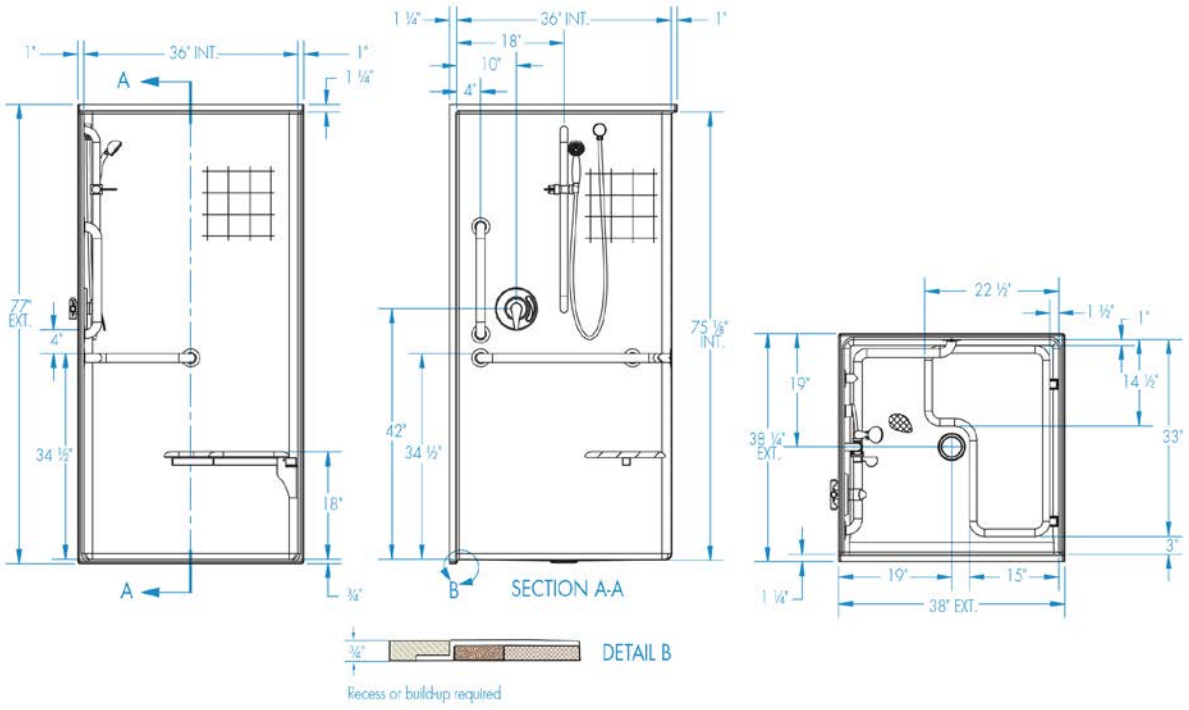
1"
36" INT.
1"
1 ¼"
A
77" EXT.
4"
34 ½"
18"
A
¾"
1 ¼"
36" INT.
1"
18"
10"
4"
75 ⅛" INT.
42"
34 ½"
B
SECTION A-A
¾"
DETAIL B
Recess or build-up required
22 ½"
1 ½"
1"
19"
14 ½"
38 ¼" EXT.
33"
3"
19"
15"
1 ¼"
38" EXT.

1363BFSD





Material : AcrylX™

Features

- 1-Piece shower
- Pre-leveled base
- 3/4 Inch skirt
- 1/2 Inch threshold
- Outward facing nailing flange
- Barrier free when properly installed
- Smooth wall is easy to clean
- Slip resistant, textured bottom
- Center drain
- Interior dimensions: 36 Inches x 36 Inches x 75-1/4 Inches
- Exterior dimensions: 42-1/2 Inches x 38-1/4 Inches x 76-7/8 Inches
- AcrylX™ applied acrylic surface

1363BFSD - PRICING CATEGORY : FL

SKU	Color	Configuration	Dimensions & Weight	MSRP
1363BFSD-AL	Almond	Center Drain	36” x 36” x 75 1/4” / 140 lb 914mm x 914mm x 1911mm / 63.49 kg	$ 1649
1363BFSD-BI	Biscuit			$ 1649
1363BFSD-BO	Bone			$ 1649
1363BFSD-WH	White			$ 1614

1363BFSD - ADA COMPLIANT CONFIGURATION

SKU	Color	Configuration	Dimensions & Weight	MSRP
1363BFSD-AL	Almond	Center Drain ADA Compliant Configuration	36” x 36” x 75 1/4” / 140 lb 914mm x 914mm x 1911mm / 63.49 kg	$ 3717
1363BFSD-BI	Biscuit			$ 3717
1363BFSD-BO	Bone			$ 3717
1363BFSD-WH	White			$ 3682

1363BFSD - ANSI COMPLIANT CONFIGURATION

SKU	Color	Configuration	Dimensions & Weight	MSRP
1363BFSD-AL	Almond	Center Drain ANSI Compliant Configuration	36” x 36” x 75 1/4” / 140 lb 914mm x 914mm x 1911mm / 63.49 kg	$ 3903
1363BFSD-BI	Biscuit			$ 3903
1363BFSD-BO	Bone			$ 3903
1363BFSD-WH	White			$ 3868

1363BFSD - L-BAR CONFIGURATION

SKU	Color	Configuration	Dimensions & Weight	MSRP
1363BFSD-AL	Almond	Center Drain L-Bar Configuration	36” x 36” x 75 1/4” / 140 lb 914mm x 914mm x 1911mm / 63.49 kg	$ 1968
1363BFSD-BI	Biscuit			$ 1968
1363BFSD-BO	Bone			$ 1968
1363BFSD-WH	White			$ 1933

1363BFSD - L-BAR CONFIGURATION AND FOLDING SEAT

SKU	Color	Configuration	Dimensions & Weight	MSRP
1363BFSD-AL	Almond	Center Drain L-Bar Configuration and Folding Seat	36” x 36” x 75 1/4” / 140 lb 914mm x 914mm x 1911mm / 63.49 kg	$ 2857
1363BFSD-BI	Biscuit			$ 2857
1363BFSD-BO	Bone			$ 2857
1363BFSD-WH	White			$ 2822

1363BFSDMA - ETCHED L-BAR CONFIGURATION

SKU	Color	Configuration	Dimensions & Weight	MSRP
1363BFSDMA-AL	Almond	Center Drain Etched L-Bar Configuration	36” x 36” x 75 1/4” / 140 lb 914mm x 914mm x 1911mm / 63.49 kg	$ 2127
1363BFSDMA-BI	Biscuit			$ 2127
1363BFSDMA-BO	Bone			$ 2127
1363BFSDMA-WH	White			$ 2092

1363BFSDMA - ETCHED L-BAR CONFIGURATION AND FOLDING SEAT

SKU	Color	Configuration	Dimensions & Weight	MSRP
1363BFSDMA-AL	Almond	Center Drain Etched L-Bar Configuration and Folding Seat	36” x 36” x 75 1/4” / 140 lb 914mm x 914mm x 1911mm / 63.49 kg	$ 2127
1363BFSDMA-BI	Biscuit			$ 3016
1363BFSDMA-BO	Bone			$ 3016
1363BFSDMA-WH	White			$ 2981

1363BFSDMA - MAS 521 CMR COMPLIANT CONFIGURATION

SKU	Color	Configuration	Dimensions & Weight	MSRP
1363BFSDMA-AL	Almond	Center Drain MAS 521 CMR Compliant Configuration	36” x 36” x 75 1/4” / 140 lb 914mm x 914mm x 1911mm / 63.49 kg	$ 3876
1363BFSDMA-BI	Biscuit			$ 3876
1363BFSDMA-BO	Bone			$ 3876
1363BFSDMA-WH	White			$ 3841

OPTIONS

SKU	Description	MSRP
4200BRASDRSF	2” Brass Surefit Joint Shower Drain Brass drain material Snap in strainer-stainless steel No-caulk connection.	$ 48
7175DISH	Stainless steel soap dish	$ 119
S4030SHRVLV-R	Single hand chrome pressure balancing mixing valve suitable for commercial use. One-piece ceramic cartridge. Maximum temperature limit stop Installed on right wall	$ 443
S4030SHRVLV-L	Single hand chrome pressure balancing mixing valve suitable for commercial use. One-piece ceramic cartridge. Maximum temperature limit stop Installed on left wall	$ 443
S4032MASS-R	Handheld shower assembly with 30 inch slide bar and 60 inch hose. MASS compliant Installed on right wall	$ 417
S4032MASS-L	Handheld shower assembly with 30 inch slide bar and 60 inch hose. MASS compliant Installed on left wall	$ 417
S7336ROD	1” diameter Stainless Steel curtain rod	$ 76
36CURTAIN	Curtain for 36” model Shipped loose	$ 101
VINYLDAM	Vinyl dam for barrier free showers. Ideal for water containment.	$ 125
THRESHOLD	Removable threshold for barrier free showers. Ideal for water containment.	$ 187
35RKBO	Finish repair kit - Case of 12 Available in White **(WH)**, or Bone **(BO)**,	$ 303
35RKWH		$ 303
S7032PHENL	Rectangular fold-up phenolic seat (factory installed) MASS Compliant Installed on Left side wall Available finishes: White **(WH)**, Teak**(TK)**	$ 925
S7032PHENWL		$ 925
S7032PHENR	Rectangular fold-up phenolic seat (factory installed) MASS Compliant Installed on Right side wall Available finishes: White **(WH)**, Teak**(TK)**	$ 925
S7032PHENWR		$ 925
S7032CUSH-L	White fold-up rectangular cushioned seat (factory installed) MASS Compliant Installed on Left side wall	$ 889
S7032CUSH-R	White fold-up rectangular cushioned seat (factory installed) MASS Compliant Installed on Right side wall	$ 889

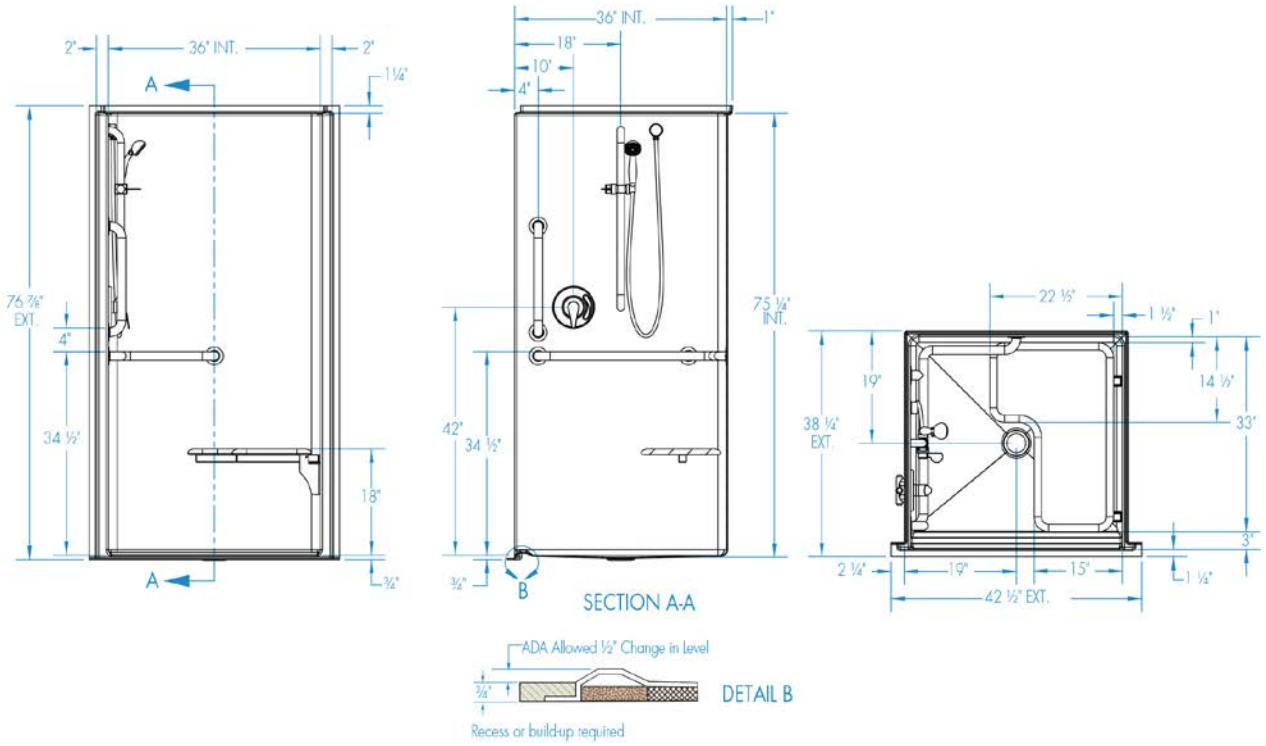
2"
36" INT.
2"
1¼"
A
76 ⅞" EXT.
4"
34 ½"
18"
A
¾"
36" INT.
1"
18"
10"
4"
75 ¼" INT.
42"
34 ½"
¾"
B
SECTION A-A
22 ½"
1 ½"
1"
14 ½"
19"
38 ¼" EXT.
33"
3"
2 ¼"
19"
15"
1 ¼"
42 ½" EXT.
ADA Allowed ½" Change in Level
¾"
DETAIL B
Recess or build-up required

1363EN



Material : AcrylX™

Features

- 1-Piece shower stall
- Low threshold-3 Inch skirt
- 2 Inch interior threshold
- Smooth wall is easy to clean
- Interior dimensions: 36 Inches x 36 Inches x 75-5/8 Inches
- Exterior dimensions: 38-1/4 Inches x 38-3/8 Inches x 77-1/2 Inches
- AcrylX™ applied acrylic surface

1363EN - PRICING CATEGORY : FL

SKU	Color	Configuration	Dimensions & Weight	MSRP
1363EN-AL	Almond	Center Drain	36” x 36” x 75 5/8” / 140 lb 914mm x 914mm x 1921mm / 63.49 kg	$ 1533
1363EN-BI	Biscuit			$ 1533
1363EN-BO	Bone			$ 1533
1363EN-WH	White			$ 1498

1363EN - TWO VERTICAL ENTRY BARS

SKU	Color	Configuration	Dimensions & Weight	MSRP
1363EN-AL	Almond	Center Drain Two Vertical Entry Bars	36” x 36” x 75 5/8” / 140 lb 914mm x 914mm x 1921mm / 63.49 kg	$ 1985
1363EN-BI	Biscuit			$ 1985
1363EN-BO	Bone	Center Drain Two Vertical Entry Bars and Folding Seat		$ 2874
1363EN-WH	White	Center Drain Two Vertical Entry Bars		$ 1950

OPTIONS

SKU	Description	MSRP
4200BRASDRSF	2” Brass Surefit Joint Shower Drain Brass drain material Snap in strainer-stainless steel No-caulk connection.	$ 48
7175DISH	Stainless steel soap dish	$ 119

OPTIONS

SKU	Description	MSRP
1VAL300	Single hand chrome pressure balancing mixing valve suitable for commercial use. One-piece ceramic cartridge. Maximum temperature limit stop Installed on right wall	$ 443
1VAL300	Single hand chrome pressure balancing mixing valve suitable for commercial use. One-piece ceramic cartridge. Maximum temperature limit stop Installed on left wall	$ 443
1SH0107COMPLETE	Handheld shower assembly with 30 inch slide bar and 60 inch hose. Installed on right wall	$ 417
1SH0107COMPLETE	Handheld shower assembly with 30 inch slide bar and 60 inch hose. Installed on left wall	$ 417
S7242ROD	1” diameter Stainless Steel curtain rod	$ 89
42CURTAIN	Shipped loose	$ 125
35RKBO	Finish repair kit - Case of 12 Available in White **(WH)**, or Bone **(BO)**,	$ 303
35RKWH		$ 303
1BAR140W	Stainless steel accessible 24 inch grab bar, 1-1/4 inch diameter, concealed flanges All grab bars are factory installed and not sold separately. Available finishes: Stainless Steel**(SS)**, Powder Coated White **(W)**	$ 271
1BAR140SS		$ 226
S7033SEATL	White fold-up single cushioned seat (factory installed) Installed on Left side wall	$ 801
S7033SEATLR	White fold-up single cushioned seat (factory installed) Installed on Right side wall	$ 801
S7033PHENL	Solid fold-up phenolic seat with slats for drainage (factory installed) Installed on Left side wall Available finishes: White **(WH)**, Teak**(TK)**	$ 1120
S7033PHENWL		$ 1120
S7033PHENWR	Solid fold-up phenolic seat with slats for drainage (factory installed) Installed on Right side wall Available finishes: White **(WH)**, Teak**(TK)**	$ 1120
S7033PHENR		$ 1120

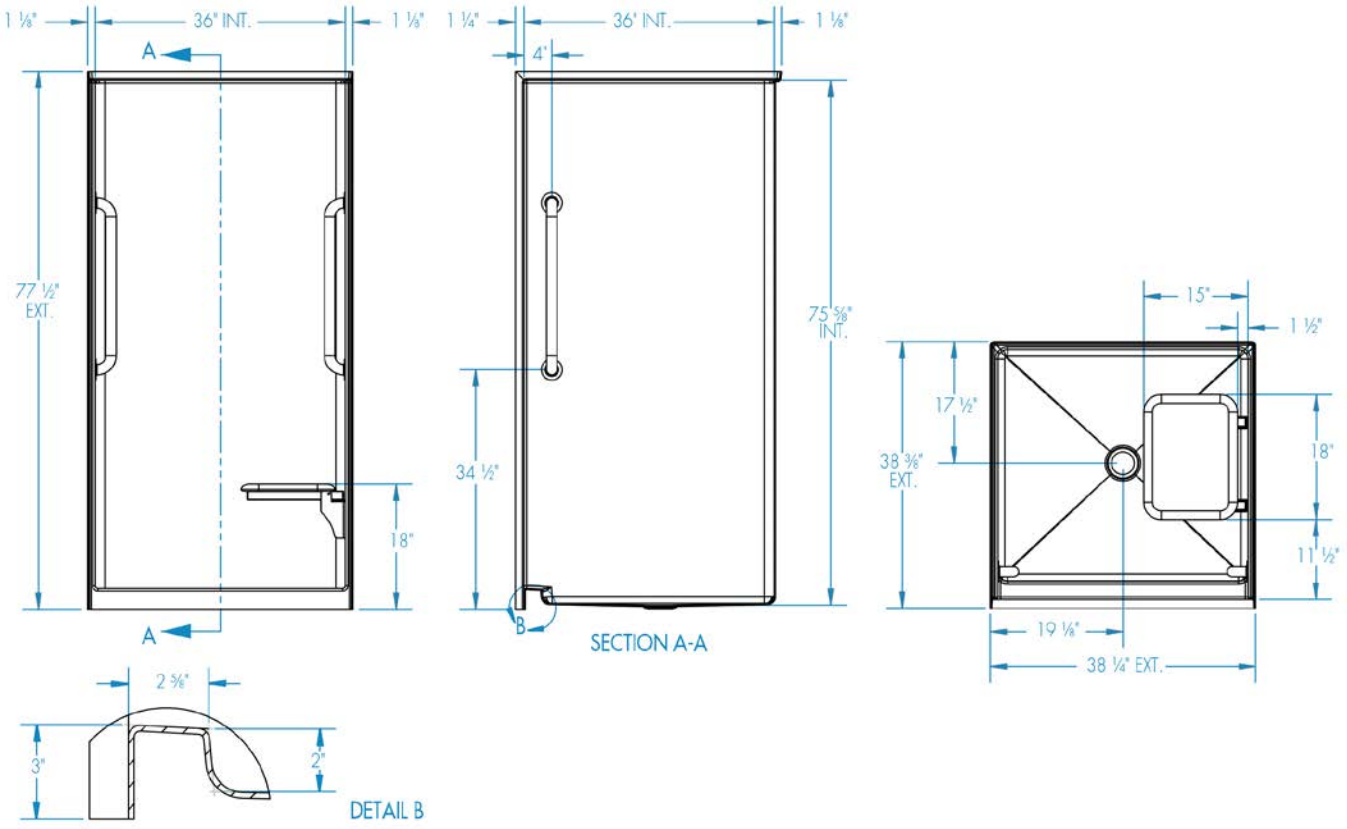
1 ⅛"
36" INT.
1 ⅛"
A
77 ½"
EXT.
18"
A
1 ¼"
36" INT.
1 ⅛"
4"
75 ⅝"
INT.
34 ½"
B
SECTION A-A
15"
1 ½"
17 ½"
38 ⅜"
EXT.
18"
11 ½"
19 ⅛"
38 ¼" EXT.
2 ⅝"
3"
2"
DETAIL B

13838BFLP





Material : AcrylX™

Features

- 1-Piece shower
- Pacific Northwest zone onlyPre-leveled base
- AcrylX™ applied acrylic surface
- 5/8 Inch skirt
- No interior threshold
- Barrier free when properly installed
- Center drain
- Interior dimensions: 36 Inches x 36 Inches x 77-7/8 Inches
- Exterior dimensions: 38-1/4 Inches x 38-3/4 Inches x 79-3/4 Inches

13838BFLP - PRICING CATEGORY : FL

SKU	Color	Configuration	Dimensions & Weight	MSRP
13838BFLP-AL	Almond	Center Drain	36” x 36” x 77 7/8” / 140 lb 914mm x 914mm x 1978mm / 63.49 kg	$ 1735
13838BFLP-BI	Biscuit			$ 1735
13838BFLP-BO	Bone			$ 1735
13838BFLP-WH	White			$ 1700

13838BFLP - L-BAR CONFIGURATION

SKU	Color	Configuration	Dimensions & Weight	MSRP
13838BFLP-AL	Almond	Center Drain L-Bar Configuration	36” x 36” x 77 7/8” / 140 lb 914mm x 914mm x 1978mm / 63.49 kg	$ 2054
13838BFLP-BI	Biscuit			$ 2054
13838BFLP-BO	Bone			$ 2054
13838BFLP-WH	White			$ 2019

13838BFLP - L-BAR CONFIGURATION AND FOLDING SEAT

SKU	Color	Configuration	Dimensions & Weight	MSRP
13838BFLP-AL	Almond	Center Drain L-Bar Configuration and Folding Seat	36” x 36” x 77 7/8” / 140 lb 914mm x 914mm x 1978mm / 63.49 kg	$ 2943
13838BFLP-BI	Biscuit			$ 2943
13838BFLP-BO	Bone			$ 2943
13838BFLP-WH	White			$ 2908

13838BFLP - L-BAR CONFIGURATION, FOLDING SEAT, VERTICAL ENTRY BAR AND HANDHELD SPRAYER

SKU	Color	Configuration	Dimensions & Weight	MSRP
13838BFLP-AL	Almond	Center Drain L-Bar Configuration, Folding Seat, Vertical Entry Bar and Handheld Sprayer	36” x 36” x 77 7/8” / 140 lb 914mm x 914mm x 1978mm / 63.49 kg	$ 3989
13838BFLP-BI	Biscuit			$ 3989
13838BFLP-BO	Bone			$ 3989
13838BFLP-WH	White			$ 3954

OPTIONS

SKU	Description	MSRP
4200BRASDRSF	2” Brass Surefit Joint Shower Drain Brass drain material Snap in strainer-stainless steel No-caulk connection.	$ 48
7175DISH	Stainless steel soap dish	$ 119
1VAL300	Single hand chrome pressure balancing mixing valve suitable for commercial use. One-piece ceramic cartridge. Maximum temperature limit stop Installed on right wall	$ 443
1VAL300	Single hand chrome pressure balancing mixing valve suitable for commercial use. One-piece ceramic cartridge. Maximum temperature limit stop Installed on left wall	$ 443
1SH0107COMPLETE	Handheld shower assembly with 30 inch slide bar and 60 inch hose. Installed on right wall	$ 417
1SH0107COMPLETE	Handheld shower assembly with 30 inch slide bar and 60 inch hose. Installed on left wall	$ 417
S7336ROD	1” diameter Stainless Steel curtain rod	$ 76
36CURTAIN	Curtain for 36” model Shipped loose	$ 101
VINYLDAM	Vinyl dam for barrier free showers. Ideal for water containment.	$ 125
THRESHOLD	Removable threshold for barrier free showers. Ideal for water containment.	$ 187
35RKBO	Finish repair kit - Case of 12 Available in White **(WH)**, or Bone **(BO)**,	$ 303
35RKWH		$ 303
1BAR109W	Stainless steel accessible 18 inch vertical grab bar, 1-1/4 inch diameter, concealed flanges All grab bars are factory installed and not sold separately. Available finishes: Stainless Steel**(SS)**, Powder Coated White **(W)**	$ 237
1BAR109SS		$ 186
S7036LPHENL	Fold-up phenolic seat (factory installed) Installed on Left side wall Available finishes: White **(WH)**, Teak**(TK)**	$ 925
S7036LPHENWHL		$ 925
S7036LPHENR		$ 925
S7036LPHENWHR		$ 925
S7036LCUSHL	White fold-up L-shaped cushioned seat (factory installed) Installed on Left side wall	$ 889
S7036LCUSHR	White fold-up L-shaped cushioned seat (factory installed) Installed on Right side wall	$ 889
S1363GBARST	Stainless steel accessible L-shaped grab bar. 18 x 32 inches ,1-1/4 inch diameter, concealed flanges All grab bars are factory installed and not sold separately. Available finishes: Stainless Steel**(SS)**	$ 319

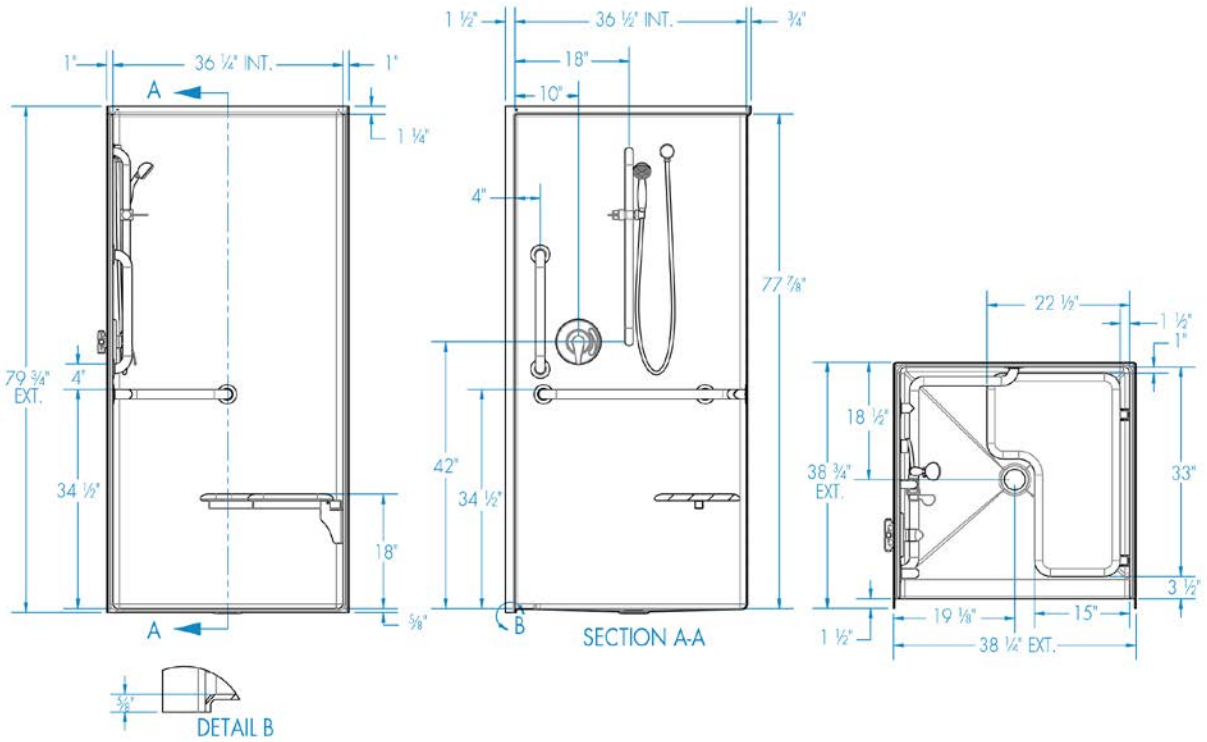
1"
36 ¼" INT.
1"
A
1 ¼"
79 ¾" EXT.
4"
34 ½"
18"
⅝"
A
⅜"
DETAIL B
1 ½"
36 ½" INT.
¾"
18"
10"
4"
77 ⅞"
42"
34 ½"
B
SECTION A-A
22 ½"
1 ½"
1"
18 ½"
38 ¾" EXT.
33"
3 ½"
19 ⅛"
15"
1 ½"
38 ¼" EXT.

14836BFLP





Material : AcrylX™

Features

- 1-Piece Shower stall
- Pre-leveled baseSlip-resistant textured floor for safety
- AcrylX™ applied acrylic surface
- 5/8 Inch skirt
- 1/2 Inch beveled threshold
- Barrier free when properly installed
- Smooth wall is easy to clean
- Center drain
- Interior dimensions: 45 Inches x 36 Inches x 76-1/2 Inches
- Exterior dimensions: 48-3/8 Inches x 39-1/4 Inches x 78-3/8 Inches

14836BFLP - PRICING CATEGORY : FL

SKU	Color	Configuration	Dimensions & Weight	MSRP
14836BFLP-AL	Almond	Center Drain	45” x 36” x 76 1/2” / 140 lb 1143mm x 914mm x 1943mm / 63.49 kg	$ 1750
14836BFLP-BI	Biscuit			$ 1750
14836BFLP-BO	Bone			$ 1750
14836BFLP-WH	White			$ 1715

14836BFLP - ANSI COMPLIANT CONFIGURATION

SKU	Color	Configuration	Dimensions & Weight	MSRP
14836BFLP-AL	Almond	Center Drain ANSI Compliant Configuration	45” x 36” x 76 1/2” / 140 lb 1143mm x 914mm x 1943mm / 63.49 kg	$ 4084
14836BFLP-BI	Biscuit			$ 4084
14836BFLP-BO	Bone			$ 4084
14836BFLP-WH	White			$ 4049

14836BFLP - L-BAR CONFIGURATION

SKU	Color	Configuration	Dimensions & Weight	MSRP
14836BFLP-AL	Almond	Center Drain L-Bar Configuration	45” x 36” x 76 1/2” / 140 lb 1143mm x 914mm x 1943mm / 63.49 kg	$ 2149
14836BFLP-BI	Biscuit			$ 2149
14836BFLP-BO	Bone			$ 2149
14836BFLP-WH	White			$ 2114

14836BFLP - L-BAR CONFIGURATION AND FOLDING SEAT

SKU	Color	Configuration	Dimensions & Weight	MSRP
14836BFLP-AL	Almond	Center Drain L-Bar Configuration and Folding Seat	45” x 36” x 76 1/2” / 140 lb 1143mm x 914mm x 1943mm / 63.49 kg	$ 3038
14836BFLP-BI	Biscuit			$ 3038
14836BFLP-BO	Bone			$ 3038
14836BFLP-WH	White			$ 3003

OPTIONS

SKU	Description	MSRP
4200BRASDRSF	2” Brass Surefit Joint Shower Drain Brass drain material Snap in strainer-stainless steel No-caulk connection.	$ 48
7175DISH	Stainless steel soap dish	$ 119
1VAL300	Single hand chrome pressure balancing mixing valve suitable for commercial use. One-piece ceramic cartridge. Maximum temperature limit stop Installed on right wall	$ 443
1VAL300	Single hand chrome pressure balancing mixing valve suitable for commercial use. One-piece ceramic cartridge. Maximum temperature limit stop Installed on left wall	$ 443
1VAL300	Single hand chrome pressure balancing mixing valve suitable for commercial use. One-piece ceramic cartridge. Maximum temperature limit stop Installed on back wall	$ 443
1SH0107COMPLETE	Handheld shower assembly with 30 inch slide bar and 60 inch hose. Installed on right wall	$ 417
1SH0107COMPLETE	Handheld shower assembly with 30 inch slide bar and 60 inch hose. Installed on left wall	$ 417
1SH0107COMPLETE	Handheld shower assembly with 30 inch slide bar and 60 inch hose. Installed on back wall	$ 417
S7242ROD	1” diameter Stainless Steel curtain rod	$ 89
48CURTAIN	Curtain for 48” model Shipped loose	$ 119
VINYLDAM	Vinyl dam for barrier free showers. Ideal for water containment.	$ 125
35RKBO	Finish repair kit - Case of 12 Available in White **(WH)**, or Bone **(BO)**,	$ 303
35RKWH		$ 303
1BAR109W	Stainless steel accessible 18 inch vertical grab bar, 1-1/4 inch diameter, concealed flanges All grab bars are factory installed and not sold separately. Available finishes: Stainless Steel**(SS)**, Powder Coated White **(W)**	$ 237
1BAR109SS		$ 186
S7036LPHENL	Fold-up phenolic seat (factory installed) Installed on Left side wall Available finishes: White **(WH)**, Teak**(TK)**	$ 925
S7036LPHENWHL		$ 925
S7036LPHENR		$ 925
S7036LPHENWHR		$ 925
S7036LCUSHL	White fold-up L-shaped cushioned seat (factory installed) Installed on Left side wall	$ 889
S7036LCUSHR	White fold-up L-shaped cushioned seat (factory installed) Installed on Right side wall	$ 889
S48BFGBARSTL	Package: Stainless steel accessible L-bar configuration (1) 18 inch and (1) 30 inch: 1-1/4 inch diameter, concealed flanges All grab bars are factory installed and not sold separately. Available finishes: Stainless Steel**(SS)**	$ 399

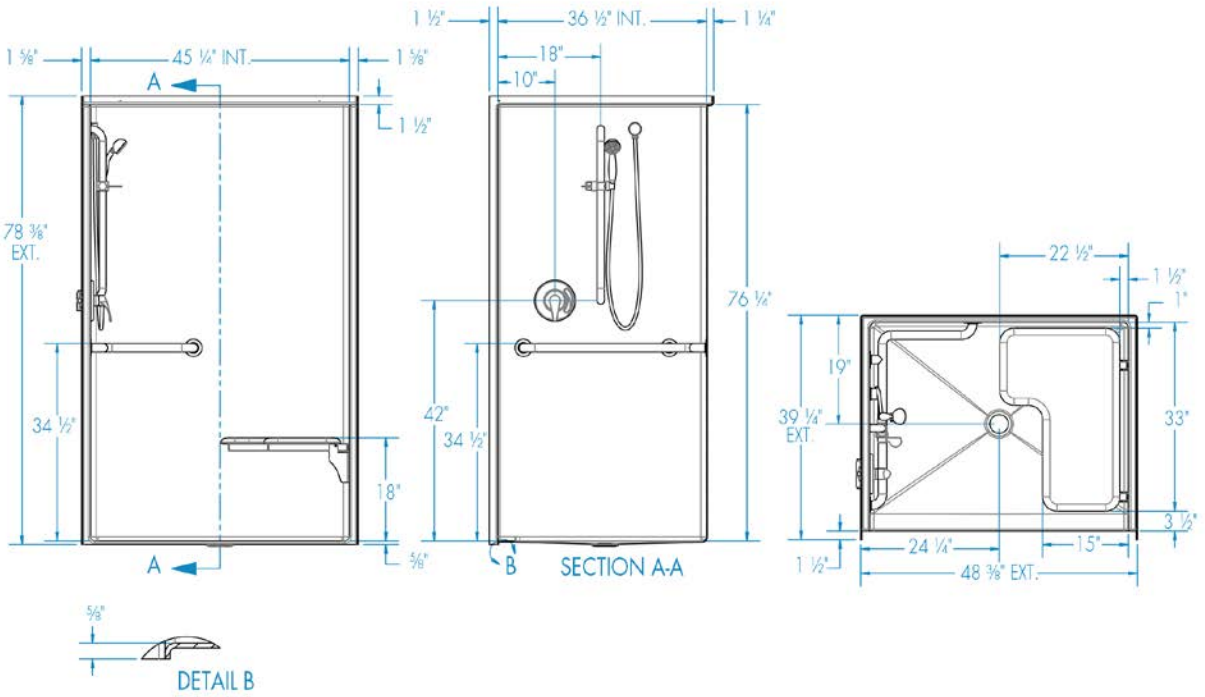
1 ⅛"
45 ¼" INT.
1 ⅛"
A
1 ½"
78 ⅜" EXT.
34 ½"
18"
A
⅝"
1 ½"
36 ½" INT.
1 ¼"
18"
10"
76 ¼"
42"
34 ½"
B
SECTION A-A
22 ½"
1 ½"
1"
19"
39 ¼" EXT.
33"
3 ½"
24 ¼"
15"
1 ½"
48 ⅜" EXT.
⅝"
DETAIL B

14836BFSBTTR



Material : AcrylX™

Features

- 1-Piece Shower Stall
- AcrylX™ applied acrylic surface
- 1/2 Inch skirt
- 1/2 Inch change of level (COL) exterior threshold
- Barrier free when properly installed
- Smooth large 12 Inch x 24 Inch subway tile wall
- Center drain outlet
- Integral front trench drain
- Level Base
- Slip-resistant textured floor for safety
- Interior dimensions: 48 Inches x 36 Inches x 76-3/4 Inches
- Exterior dimensions: 54 Inches x 38-1/8 Inches x 78-3/4 Inches
- Stainless steel grate

14836BFSBTTR - PRICING CATEGORY : FL

SKU	Color	Configuration	Dimensions & Weight	MSRP
14836BFSBTTR-BI	Biscuit	Center Drain	48” x 36” x 76 3/4” / 160 lb 1219mm x 914mm x 1949mm / 72.56 kg	Quote Only
14836BFSBTTR-BO	Bone			Quote Only
14836BFSBTTR-WH	White			Quote Only

14836BFSBTTR - ANSI COMPLIANT CONFIGURATION

SKU	Color	Configuration	Dimensions & Weight	MSRP
14836BFSBTTR-BI	Biscuit	Center Drain ANSI Compliant Configuration	48” x 36” x 76 3/4” / 160 lb 1219mm x 914mm x 1949mm / 72.56 kg	Quote Only
14836BFSBTTR-BO	Bone			Quote Only
14836BFSBTTR-WH	White			Quote Only

14836BFSBTTR - L-BAR CONFIGURATION

SKU	Color	Configuration	Dimensions & Weight	MSRP
14836BFSBTTR-BI	Biscuit	Center Drain L-Bar Configuration	48” x 36” x 76 3/4” / 160 lb 1219mm x 914mm x 1949mm / 72.56 kg	Quote Only
14836BFSBTTR-BO	Bone			Quote Only
14836BFSBTTR-WH	White			Quote Only

14836BFSBTTR - L-BAR CONFIGURATION AND FOLDING SEAT

SKU	Color	Configuration	Dimensions & Weight	MSRP
14836BFSBTTR-BI	Biscuit	Center Drain L-Bar Configuration and Folding Seat	48” x 36” x 76 3/4” / 160 lb 1219mm x 914mm x 1949mm / 72.56 kg	Quote Only
14836BFSBTTR-BO	Bone			Quote Only
14836BFSBTTR-WH	White			Quote Only

14836BFSBTTR - U-BAR

SKU	Color	Configuration	Dimensions & Weight	MSRP
14836BFSBTTR-BI	Biscuit	Center Drain U-Bar	48” x 36” x 76 3/4” / 160 lb 1219mm x 914mm x 1949mm / 72.56 kg	Quote Only
14836BFSBTTR-BO	Bone			Quote Only
14836BFSBTTR-WH	White			Quote Only

14836BFSBTTR - U-BAR AND HANDHELD SPRAYER

SKU	Color	Configuration	Dimensions & Weight	MSRP
14836BFSBTTR-BI	Biscuit	Center Drain U-Bar and Handheld Sprayer	48” x 36” x 76 3/4” / 160 lb 1219mm x 914mm x 1949mm / 72.56 kg	Quote Only
14836BFSBTTR-BO	Bone			Quote Only
14836BFSBTTR-WH	White			Quote Only

OPTIONS

SKU	Description	MSRP
4200BRASDRSF	2” Brass Surefit Joint Shower Drain Brass drain material Snap in strainer-stainless steel No-caulk connection.	$ 48
1S3221PDL	White fold-up L-shaped cushioned seat (factory installed) Installed on Left side wall	$ 889
1S3221PDR	White fold-up L-shaped cushioned seat (factory installed) Installed on Right side wall	$ 889
1S3221PHWL	Solid fold-up phenolic seat with slats for drainage (factory installed) Installed on Left side wall Available finishes: White **(WH)**, Teak**(TK)**,	$ 925
1S3221PHL		$ 925
1S3221PHR	Solid fold-up phenolic seat with slats for drainage (factory installed) Installed on Right side wall Available finishes: White **(WH)**, Teak**(TK)**,	$ 925
1S3221PHWR		$ 925
SMSOAPDISH	Small soap dish shipped loose	$ 188
LGSOAPDISH	Large soap dish shipped loose	$ 264
1VAL300	Single hand chrome pressure balancing mixing valve suitable for commercial use. One-piece ceramic cartridge. Maximum temperature limit stop Installed on right wall	$ 443
1VAL300	Single hand chrome pressure balancing mixing valve suitable for commercial use. One-piece ceramic cartridge. Maximum temperature limit stop Installed on left wall	$ 443
1VAL300	Single hand chrome pressure balancing mixing valve suitable for commercial use. One-piece ceramic cartridge. Maximum temperature limit stop Installed on back wall	$ 443
1SH0107COMPLETE	Handheld shower assembly with 30 inch slide bar and 60 inch hose. Installed on right wall	$ 417

OPTIONS

SKU	Description	MSRP
1SH0107COMPLETE	Handheld shower assembly with 30 inch slide bar and 60 inch hose. Installed on left wall	$ 417
1SH0107COMPLETE	Handheld shower assembly with 30 inch slide bar and 60 inch hose. Installed on back wall	$ 417
1CUR131WHT	54 inch x 72 inch white premium weighted shower curtain Shipped loose	$ 406
TRENCHMAT	Underaly ramp for trench drain shower models Quantity of (2)	$ 405
48SHFWBALL	Extra reinforcement for after market accessories installment on all walls.	$ 370
M-48WGRATE	Optional powder coated white trench grate. Unit comes standard with Stainless Steel.	$ 1041
1BAR109W	Stainless steel accessible 18 inch vertical grab bar, 1-1/4 inch diameter, concealed flanges All grab bars are factory installed and not sold separately. Available finishes: Stainless Steel**(SS)**, Powder Coated White **(W)**	$ 237
1BAR109SS		$ 186
M-BAR112302SS	Package: Stainless steel accessible U-bar configuration (2) 28 inch and (1) 36 inch: 1-1/4 inch diameter, concealed flanges All grab bars are factory installed and not sold separately. Available finishes: Stainless Steel**(SS)**	$ 697
M-BAR135301SS	Package: Stainless steel accessible L-bar configuration (1) 28 inch and (1) 18 inch: 1-1/4 inch diameter, concealed flanges All grab bars are factory installed and not sold separately. Available finishes: Stainless Steel**(SS)**	$ 399
1ROD114SS	1” diameter Stainless Steel curtain rod	$ 125

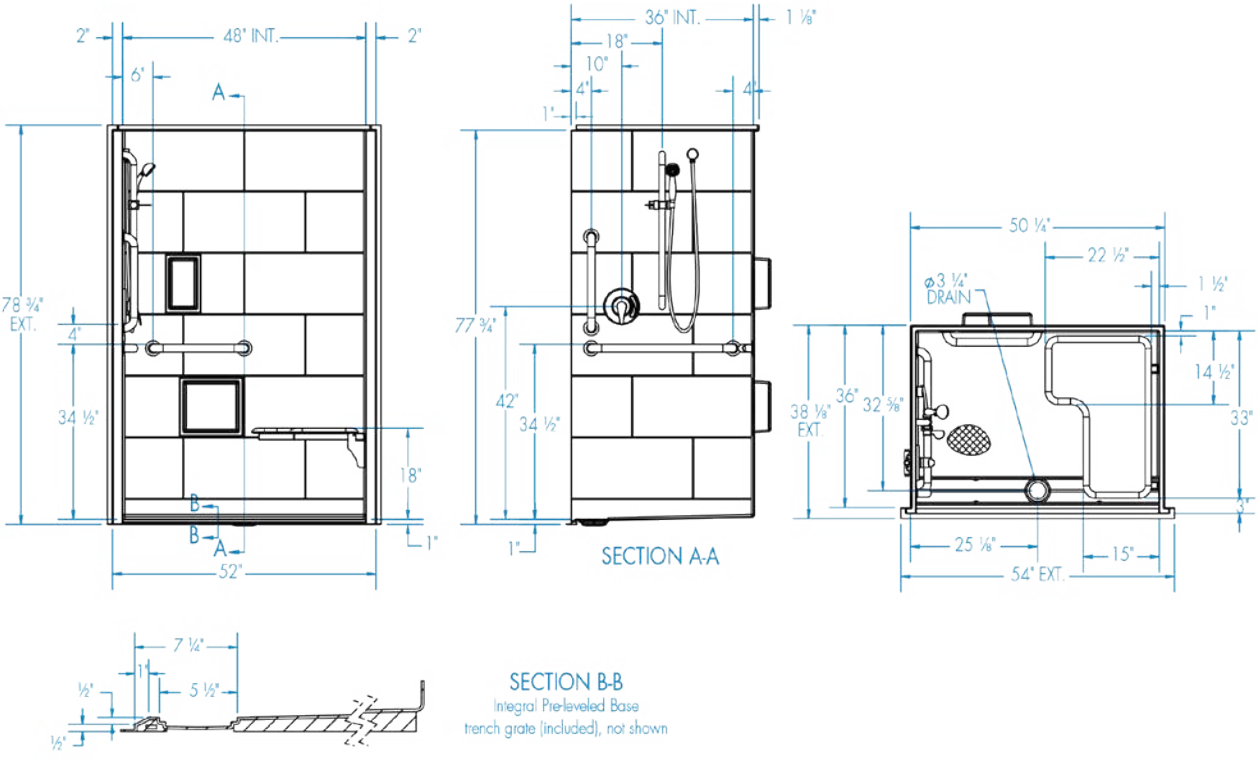
2"
48" INT.
2"
6"
A
78 ¾"
EXT.
4"
34 ½"
18"
B
B
A
1"
52"
36" INT.
1 ⅛"
18"
10"
4"
4"
1"
77 ¾"
42"
34 ½"
1"
SECTION A-A
50 ¼"
22 ½"
ø3 ¼"
DRAIN
1 ½"
1"
14 ½"
38 ⅛"
EXT.
36"
32 ⅝"
33"
3"
25 ⅛"
15"
54" EXT.
7 ¼"
1"
½"
5 ½"
½"
SECTION B-B
Integral Pre-leveled Base
trench grate (included), not shown

14836BFSCTTR



Material : AcrylX™

Features

- 1-Piece Shower stall
- AcrylX™ applied acrylic surface
- 1-1⁄8 Inch skirt
- Barrier free when properly installed
- Smooth large 12 Inch x 24 Inch subway tile wall
- Center front drain outlet
- Integral front trench drain
- Level Base
- Slip-resistant textured floor for safety
- Interior dimensions: 48 Inches x 36 Inches x 76-3/4 Inches
- Exterior dimensions: 54 Inches x 38-1/8 Inches x 78-3/4 Inches
- Stainless steel Tamper-proof grate

14836BFSCTTR - PRICING CATEGORY : FL

SKU	Color	Configuration	Dimensions & Weight	MSRP
14836BFSCTTR-BI	Biscuit	Center Drain	48” x 36” x 76 3/4” / 160 lb 1219mm x 914mm x 1949mm / 72.56 kg	Quote Only
14836BFSCTTR-BO	Bone			Quote Only
14836BFSCTTR-WH	White			Quote Only

14836BFSCTTR - ANSI COMPLIANT CONFIGURATION

SKU	Color	Configuration	Dimensions & Weight	MSRP
14836BFSCTTR-BI	Biscuit	Center Drain ANSI Compliant Configuration	48” x 36” x 76 3/4” / 160 lb 1219mm x 914mm x 1949mm / 72.56 kg	Quote Only
14836BFSCTTR-BO	Bone			Quote Only
14836BFSCTTR-WH	White			Quote Only

14836BFSCTTR - L-BAR CONFIGURATION

SKU	Color	Configuration	Dimensions & Weight	MSRP
14836BFSCTTR-BI	Biscuit	Center Drain L-Bar Configuration	48” x 36” x 76 3/4” / 160 lb 1219mm x 914mm x 1949mm / 72.56 kg	Quote Only
14836BFSCTTR-BO	Bone			Quote Only
14836BFSCTTR-WH	White			Quote Only

14836BFSCTTR - L-BAR CONFIGURATION AND FOLDING SEAT

SKU	Color	Configuration	Dimensions & Weight	MSRP
14836BFSCTTR-BI	Biscuit	Center Drain L-Bar Configuration and Folding Seat	48” x 36” x 76 3/4” / 160 lb 1219mm x 914mm x 1949mm / 72.56 kg	Quote Only
14836BFSCTTR-BO	Bone			Quote Only
14836BFSCTTR-WH	White			Quote Only

14836BFSCTTR - U-BAR

SKU	Color	Configuration	Dimensions & Weight	MSRP
14836BFSCTTR-BI	Biscuit	Center Drain U-Bar	48” x 36” x 76 3/4” / 160 lb 1219mm x 914mm x 1949mm / 72.56 kg	Quote Only
14836BFSCTTR-BO	Bone			Quote Only
14836BFSCTTR-WH	White			Quote Only

14836BFSCTTR - U-BAR AND HANDHELD SPRAYER

SKU	Color	Configuration	Dimensions & Weight	MSRP
14836BFSCTTR-BI	Biscuit	Center Drain U-Bar and Handheld Sprayer	48” x 36” x 76 3/4” / 160 lb 1219mm x 914mm x 1949mm / 72.56 kg	Quote Only
14836BFSCTTR-BO	Bone			Quote Only
14836BFSCTTR-WH	White			Quote Only

OPTIONS

SKU	Description	MSRP
4200BRASDRSF	2” Brass Surefit Joint Shower Drain Brass drain material Snap in strainer-stainless steel No-caulk connection.	$ 48
1S3221PDL	White fold-up L-shaped cushioned seat (factory installed) Installed on Left side wall	$ 889
1S3221PDR	White fold-up L-shaped cushioned seat (factory installed) Installed on Right side wall	$ 889
1S3221PHWL	Solid fold-up phenolic seat with slats for drainage (factory installed) Installed on Left side wall Available finishes: White **(WH)**, Teak**(TK)**,	$ 925
1S3221PHL		$ 925
1S3221PHR	Solid fold-up phenolic seat with slats for drainage (factory installed) Installed on Right side wall Available finishes: White **(WH)**, Teak**(TK)**,	$ 925
1S3221PHWR		$ 925
SMSOAPDISH	Small soap dish shipped loose	$ 188
LGSOAPDISH	Large soap dish shipped loose	$ 264
1VAL300	Single hand chrome pressure balancing mixing valve suitable for commercial use. One-piece ceramic cartridge. Maximum temperature limit stop Installed on right wall	$ 443
1VAL300	Single hand chrome pressure balancing mixing valve suitable for commercial use. One-piece ceramic cartridge. Maximum temperature limit stop Installed on left wall	$ 443
1VAL300	Single hand chrome pressure balancing mixing valve suitable for commercial use. One-piece ceramic cartridge. Maximum temperature limit stop Installed on back wall	$ 443
1SH0107COMPLETE	Handheld shower assembly with 30 inch slide bar and 60 inch hose. Installed on right wall	$ 417

OPTIONS

SKU	Description	MSRP
1SH0107COMPLETE	Handheld shower assembly with 30 inch slide bar and 60 inch hose. Installed on left wall	$ 417
1SH0107COMPLETE	Handheld shower assembly with 30 inch slide bar and 60 inch hose. Installed on back wall	$ 417
1CUR131WHT	54 inch x 72 inch white premium weighted shower curtain Shipped loose	$ 406
48SHFWBALL	Extra reinforcement for after market accessories installment on all walls.	$ 370
M-48WGRATE	Optional powder coated white trench grate. Unit comes standard with Stainless Steel.	$ 1041
M-BAR112302SS	Package: Stainless steel accessible U-bar configuration (2) 28 inch and (1) 36 inch: 1-1/4 inch diameter, concealed flanges All grab bars are factory installed and not sold separately. Available finishes: Stainless Steel**(SS)**	$ 697
M-BAR135301SS	Package: Stainless steel accessible L-bar configuration (1) 28 inch and (1) 18 inch: 1-1/4 inch diameter, concealed flanges All grab bars are factory installed and not sold separately. Available finishes: Stainless Steel**(SS)**	$ 399
1ROD114SS	1” diameter Stainless Steel curtain rod	$ 125

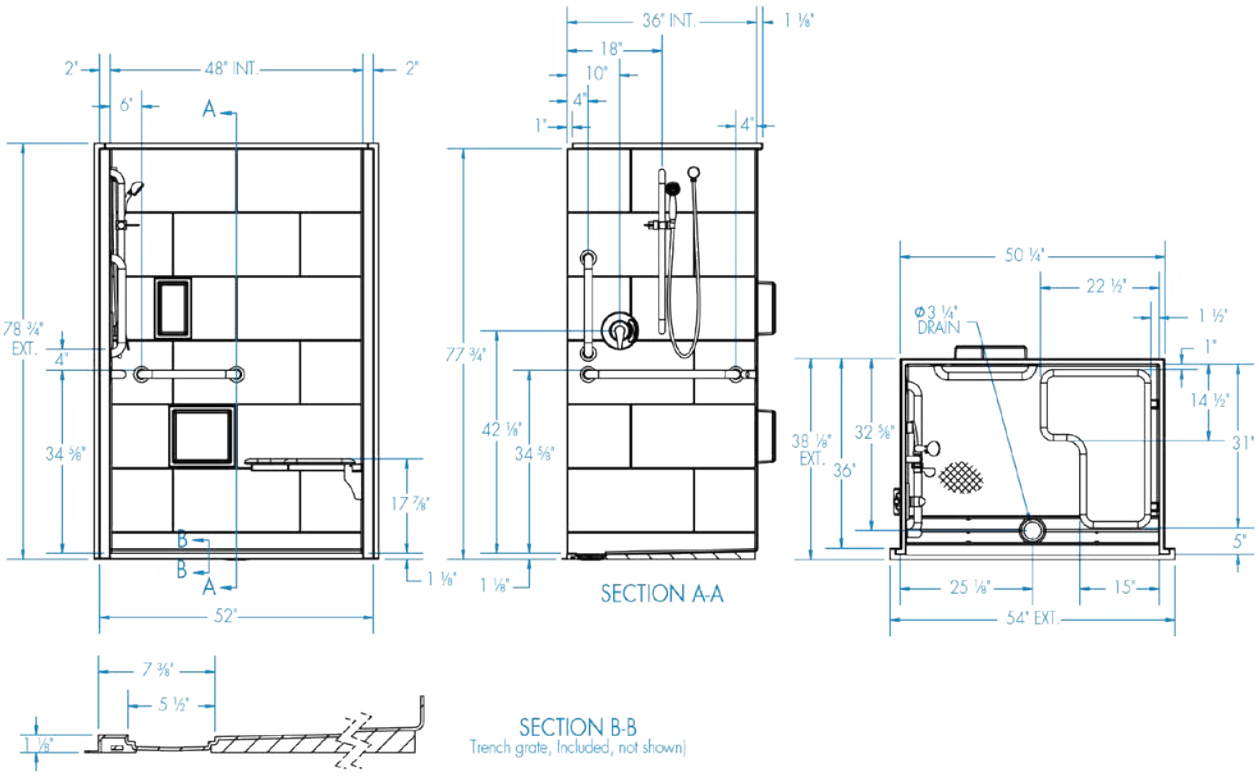
2"
48" INT.
2"
6"
A
78 ¾"
EXT.
4"
34 ⅜"
17 ⅞"
B
B
A
1 ⅛"
52"
36" INT.
1 ⅛"
18"
10"
4"
1"
4"
77 ¾"
42 ⅛"
34 ⅝"
1 ⅛"
SECTION A-A
50 ¼"
22 ½"
Ø3 ¼"
DRAIN
1 ½"
1"
14 ½"
31"
38 ⅛"
EXT.
36"
32 ⅝"
5"
25 ⅛"
15"
54" EXT.
7 ⅜"
5 ½"
1 ⅛"
SECTION B-B
Trench grate, Included, not shown)

14836FHA



Material : AcrylX™

Features

- 1-piece shower
- FHA/ANSI B Compliant
- Low threshold -3-1/2 Inch skirt
- Smooth wall is easy to clean
- Slip-resistant textured floor for safety
- Interior dimensions: 48 Inches x 36 Inches x 77-1/4Inches
- Exterior dimensions: 50-5/8 Inches x 38-5/8 Inches x 79 Inches

14836FHA - PRICING CATEGORY : FL

SKU	Color	Configuration	Dimensions & Weight	MSRP
14836FHA-AL	Almond	Center Drain	48” x 36” x 77 1/4” / 110 lb 1219mm x 914mm x 1962mm / 49.89 kg	$ 1934
14836FHA-BI	Biscuit			$ 1934
14836FHA-BO	Bone			$ 1934
14836FHA-WH	White			$ 1899

OPTIONS

SKU	Description	MSRP
4200BRASDRSF	2” Brass Surefit Joint Shower Drain Brass drain material Snap in strainer-stainless steel No-caulk connection.	$ 48
1BAR140W	Stainless steel accessible 24 inch grab bar, 1-1/4 inch diameter, concealed flanges Custom location installation; drawing required. All grab bars are factory installed and not sold separately. Not all bars available on all units, consult customer care. Available finishes: Stainless Steel**(SS)**, Powder Coated White **(W)**,	$ 271
1BAR140SS	Stainless steel accessible 24 inch grab bar, 1-1/4 inch diameter, concealed flanges Custom location installation; drawing required. All grab bars are factory installed and not sold separately. Not all bars available on all units, consult customer care. Available finishes: Stainless Steel**(SS)**, Powder Coated White **(W)**,	$ 226
1BAR903SS	Stainless steel accessible L-shaped grab bar. 18 x 32 inches , 1-1/4 inch diameter, concealed flanges Custom location installation; drawing required. All grab bars are factory installed and not sold separately. Not all bars available on all units, consult customer care. Available finishes: Stainless Steel**(SS)**, Powder Coated White **(W)**,	$ 319
1BAR459W		$ 482
7175DISH	Stainless steel soap dish	$ 119
1VAL300	Single hand chrome pressure balancing mixing valve suitable for commercial use. One-piece ceramic cartridge. Maximum temperature limit stop Installed on right wall	$ 443

OPTIONS

SKU	Description	MSRP
1VAL300	Single hand chrome pressure balancing mixing valve suitable for commercial use. One-piece ceramic cartridge. Maximum temperature limit stop Installed on left wall	$ 443
1SH0107COMPLETE	Handheld shower assembly with 30 inch slide bar and 60 inch hose. Installed on right wall	$ 417
1SH0107COMPLETE	Handheld shower assembly with 30 inch slide bar and 60 inch hose. Installed on left wall	$ 417
S7242ROD	1” diameter Stainless Steel curtain rod	$ 89
48CURTAIN	Curtain for 48” model Shipped loose	$ 119
35RKBO	Finish repair kit - Case of 12 Available in White **(WH)**, or Bone **(BO)**,	$ 303
35RKWH		$ 303
S7036LPHENL	Fold-up phenolic seat (factory installed) Installed on Left side wall Available finishes: White **(WH)**, Teak**(TK)**	$ 925
S7036LPHENWHL		$ 925
S7036LPHENR		$ 925
S7036LPHENWHR		$ 925
S7036LCUSHL	White fold-up L-shaped cushioned seat (factory installed) Installed on Left side wall	$ 889
S7036LCUSHR	White fold-up L-shaped cushioned seat (factory installed) Installed on Right side wall	$ 889

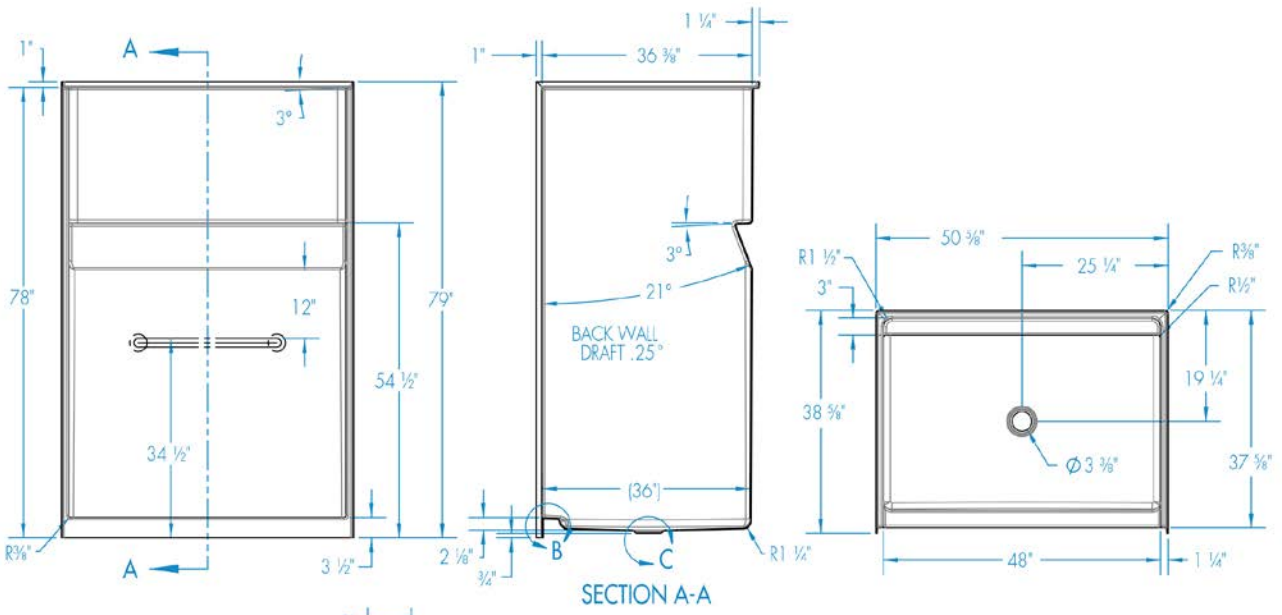

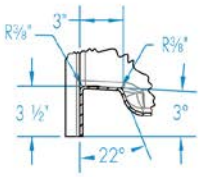

DETAIL B

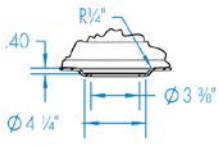

DETAIL C

14836ST





Material : AcrylX™

Features

- Shower stall
- Textured tile finish is easy to maintain
- Molded toiletry shelves
- Space saving design (Not listed by IAPMO or FHA)
- Slip-resistant textured floor for safety
- Center drain
- AcrylX™ applied acrylic surface

14836ST - PRICING CATEGORY : FL

SKU	Color	Configuration	Dimensions & Weight	MSRP
14836ST-AL	Almond	Center Drain	48” x 36” x 77” / 110 lb 1219mm x 914mm x 1956mm / 49.89 kg	$ 1980
14836ST-BI	Biscuit			$ 1980
14836ST-BO	Bone			$ 1980
14836ST-WH	White			$ 1945

OPTIONS

SKU	Description	MSRP
4200BRASDRSF	2” Brass Surefit Joint Shower Drain Brass drain material Snap in strainer-stainless steel No-caulk connection.	$ 48
1BAR109W	Stainless steel accessible 18 inch grab bar, 1-1/4 inch diameter, concealed flanges Custom location installation; drawing required. All grab bars are factory installed and not sold separately. Not all bars available on all units, consult customer care. Available finishes: Stainless Steel**(SS)**, Powder Coated White **(W)**,	$ 237
1BAR109SS	Stainless steel accessible 18 inch grab bar, 1-1/4 inch diameter, concealed flanges Custom location installation; drawing required. All grab bars are factory installed and not sold separately. Not all bars available on all units, consult customer care. Available finishes: Stainless Steel**(SS)**, Powder Coated White **(W)**,	$ 186
1BAR903SS	Stainless steel accessible L-shaped grab bar. 18 x 32 inches , 1-1/4 inch diameter, concealed flanges Custom location installation; drawing required. All grab bars are factory installed and not sold separately. Not all bars available on all units, consult customer care. Available finishes: Stainless Steel**(SS)**, Powder Coated White **(W)**,	$ 319
1BAR459W		$ 482
7175DISH	Stainless steel soap dish	$ 119
1VAL300	Single hand chrome pressure balancing mixing valve suitable for commercial use. One-piece ceramic cartridge. Maximum temperature limit stop Installed on right wall	$ 443

OPTIONS

SKU	Description	MSRP
1VAL300	Single hand chrome pressure balancing mixing valve suitable for commercial use. One-piece ceramic cartridge. Maximum temperature limit stop Installed on left wall	$ 443
1SH0107COMPLETE	Handheld shower assembly with 30 inch slide bar and 60 inch hose. Installed on right wall	$ 417
1SH0107COMPLETE	Handheld shower assembly with 30 inch slide bar and 60 inch hose. Installed on left wall	$ 417
S7242ROD	1” diameter Stainless Steel curtain rod	$ 89
48CURTAIN	Curtain for 48” model Shipped loose	$ 119
35RKBO	Finish repair kit - Case of 12 Available in White **(WH)**, or Bone **(BO)**,	$ 303
35RKWH		$ 303
S7036LPHENL	Fold-up phenolic seat (factory installed) Installed on Left side wall Available finishes: White **(WH)**, Teak**(TK)**	$ 925
S7036LPHENWHL		$ 925
S7036LPHENR		$ 925
S7036LPHENWHR		$ 925
S7036LCUSHL	White fold-up L-shaped cushioned seat (factory installed) Installed on Left side wall	$ 889
S7036LCUSHR	White fold-up L-shaped cushioned seat (factory installed) Installed on Right side wall	$ 889

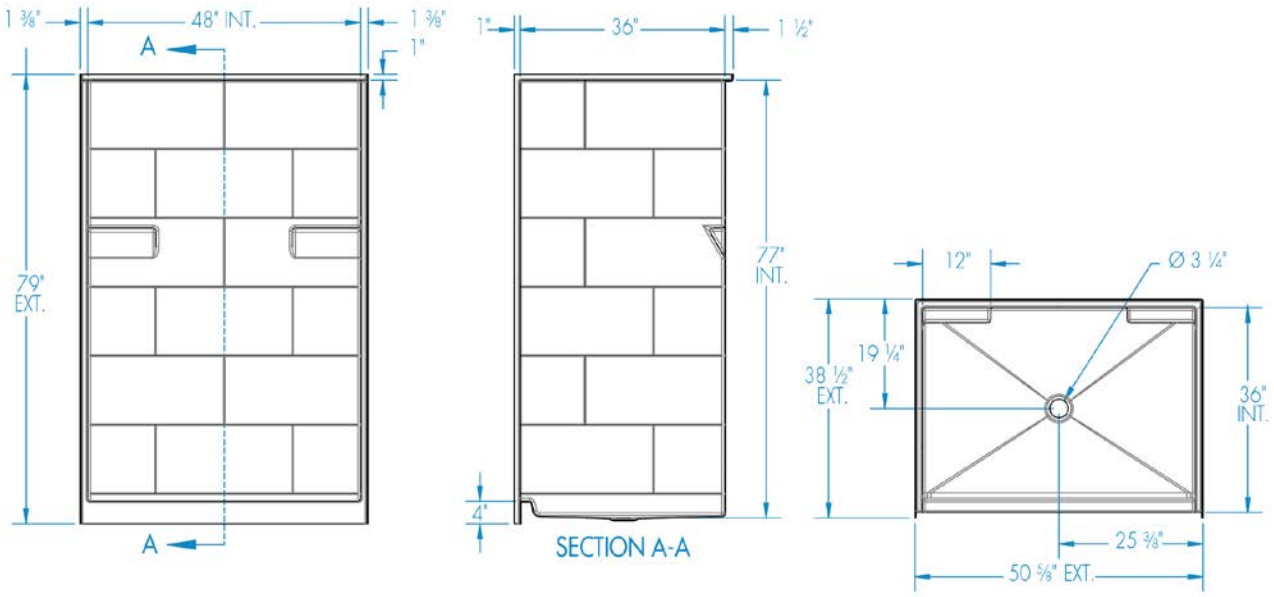
1 3/8"
48" INT.
1 3/8"
1"
A
79"
EXT.
A
1"
36"
1 1/2"
77"
INT.
4"
SECTION A-A
12"
Ø 3 1/4"
19 1/4"
38 1/2"
EXT.
36"
INT.
25 3/8"
50 5/8" EXT.

1483BFSD



Material : AcrylX™

Features

- 1-Piece Shower stall
- Pre-leveled base
- Slip-resistant textured floor for safety
- AcrylX™ applied acrylic surface
- 3/4 Inch skirt
- 1/2 Inch interior threshold
- Barrier free when properly installed
- Smooth wall is easy to clean
- Center drain
- Interior dimensions: 46 Inches x 36 Inches x 75-1/4 Inches
- Exterior dimensions: 48 Inches x 38-1/4 Inches x 77-1/4 Inches

1483BFSD - PRICING CATEGORY : FL

SKU	Color	Configuration	Dimensions & Weight	MSRP
1483BFSD-AL	Almond	Center Drain	46” x 36” x 75 1/4” / 118 lb 1168mm x 914mm x 1911mm / 53.51 kg	$ 1538
1483BFSD-BI	Biscuit			$ 1538
1483BFSD-BO	Bone			$ 1538
1483BFSD-WH	White			$ 1503

1483BFSD - ANSI COMPLIANT CONFIGURATION

SKU	Color	Configuration	Dimensions & Weight	MSRP
1483BFSD-AL	Almond	Center Drain ANSI Compliant Configuration	46” x 36” x 75 1/4” / 118 lb 1168mm x 914mm x 1911mm / 53.51 kg	$ 3792
1483BFSD-BI	Biscuit			$ 3792
1483BFSD-BO	Bone			$ 3792
1483BFSD-WH	White			$ 3757

1483BFSD - L-BAR CONFIGURATION

SKU	Color	Configuration	Dimensions & Weight	MSRP
1483BFSD-AL	Almond	Center Drain L-Bar Configuration	46” x 36” x 75 1/4” / 118 lb 1168mm x 914mm x 1911mm / 53.51 kg	$ 1857
1483BFSD-BI	Biscuit			$ 1857
1483BFSD-BO	Bone			$ 1857
1483BFSD-WH	White			$ 1822

1483BFSD - L-BAR CONFIGURATION AND FOLDING SEAT

SKU	Color	Configuration	Dimensions & Weight	MSRP
1483BFSD-AL	Almond	Center Drain L-Bar Configuration and Folding Seat	46” x 36” x 75 1/4” / 118 lb 1168mm x 914mm x 1911mm / 53.51 kg	$ 2746
1483BFSD-BI	Biscuit			$ 2746
1483BFSD-BO	Bone			$ 2746
1483BFSD-WH	White			$ 2711

OPTIONS

SKU	Description	MSRP
4200BRASDRSF	2” Brass Surefit Joint Shower Drain Brass drain material Snap in strainer-stainless steel No-caulk connection.	$ 48
7175DISH	Stainless steel soap dish	$ 119
1VAL300	Single hand chrome pressure balancing mixing valve suitable for commercial use. One-piece ceramic cartridge. Maximum temperature limit stop Installed on right wall	$ 443
1VAL300	Single hand chrome pressure balancing mixing valve suitable for commercial use. One-piece ceramic cartridge. Maximum temperature limit stop Installed on left wall	$ 443
1VAL300	Single hand chrome pressure balancing mixing valve suitable for commercial use. One-piece ceramic cartridge. Maximum temperature limit stop Installed on back wall	$ 443
1SH0107COMPLETE	Handheld shower assembly with 30 inch slide bar and 60 inch hose. Installed on right wall	$ 417
1SH0107COMPLETE	Handheld shower assembly with 30 inch slide bar and 60 inch hose. Installed on left wall	$ 417
1SH0107COMPLETE	Handheld shower assembly with 30 inch slide bar and 60 inch hose. Installed on back wall	$ 417
S7242ROD	1” diameter Stainless Steel curtain rod	$ 89
48CURTAIN	Curtain for 48” model Shipped loose	$ 119
35RKBO	Finish repair kit - Case of 12 Available in White **(WH)**, or Bone **(BO)**,	$ 303
35RKWH		$ 303
1BAR109W	Stainless steel accessible 18 inch vertical grab bar, 1-1/4 inch diameter, concealed flanges All grab bars are factory installed and not sold separately. Available finishes: Stainless Steel**(SS)**, Powder Coated White **(W)**	$ 237
1BAR109SS		$ 186
S7036LPHENL	Fold-up phenolic seat (factory installed) Installed on Left side wall Available finishes: White **(WH)**, Teak**(TK)**	$ 925
S7036LPHENWHL		$ 925
S7036LPHENR		$ 925
S7036LPHENWHR		$ 925
S7036LCUSHL	White fold-up L-shaped cushioned seat (factory installed) Installed on Left side wall	$ 889
S7036LCUSHR	White fold-up L-shaped cushioned seat (factory installed) Installed on Right side wall	$ 889
S1363GBARST	Stainless steel accessible L-shaped grab bar. 18 x 32 inches ,1-1/4 inch diameter, concealed flanges All grab bars are factory installed and not sold separately. Available finishes: Stainless Steel**(SS)**	$ 319

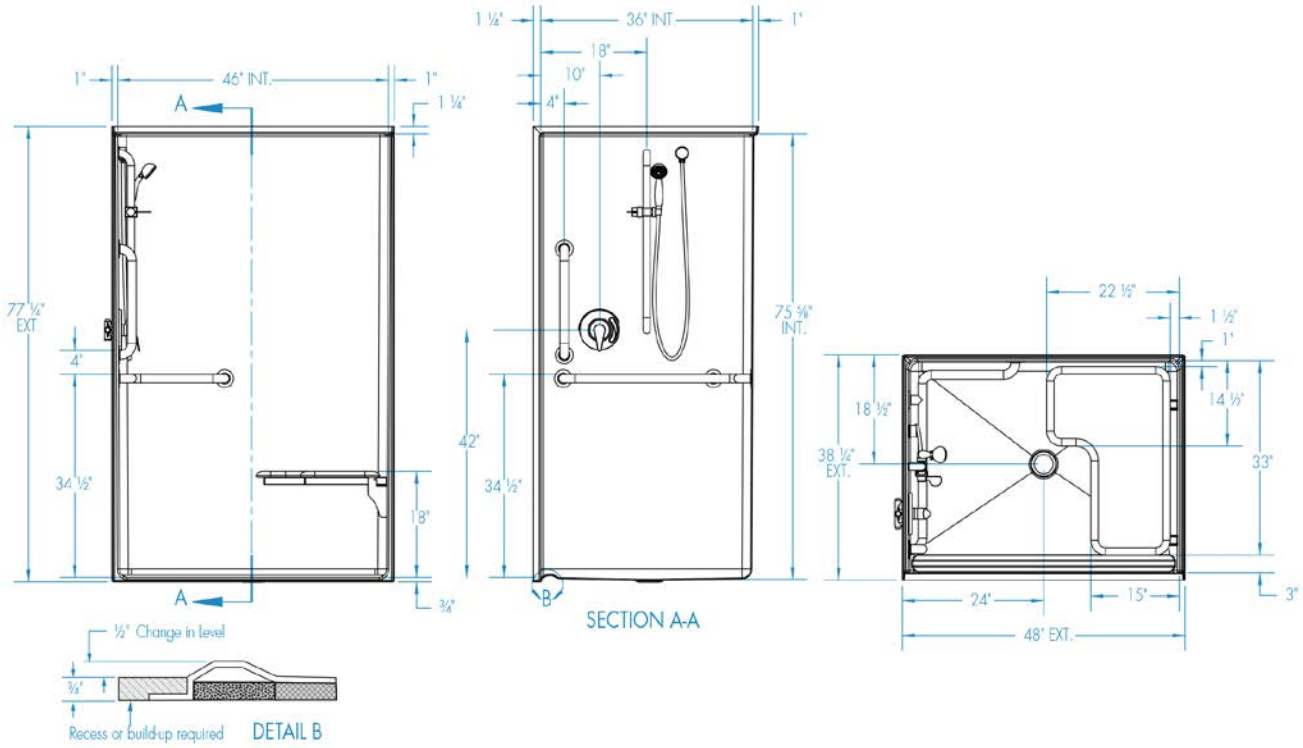
1"
46" INT.
1"
1 ¼"
A
77 ⅛" EXT.
4"
34 ½"
18"
A
¾"
1 ¼"
36" INT.
1"
18"
10"
4"
42"
34 ½"
75 ⅝" INT.
B
SECTION A-A
22 ½"
1 ½"
1"
14 ½"
18 ½"
38 ¼" EXT.
33"
3"
24"
15"
48" EXT.
½" Change in level
¾"
Recess or build-up required
DETAIL B

1483EN





Material : AcrylX™

Features

- 1-Piece Shower stall
- Slip-resistant textured floor for safety
- East zone only
- AcrylX™ applied acrylic surface
- 3 Inch skirt
- 1 1⁄2 Inch interior threshold
- 1-piece shower
- Smooth wall is easy to clean
- Interior dimensions: 45-1/2 Inches x 36-1/4 Inches x 75-5/8 Inches
- Exterior dimensions: 48 Inches x 38-3/4 Inches x 77-3/4 Inches

1483EN - PRICING CATEGORY : FL

SKU	Color	Configuration	Dimensions & Weight	MSRP
1483EN-AL	Almond	Center Drain	46” x 36” x 75 5/8” / 118 lb 1168mm x 914mm x 1921mm / 53.51 kg	$ 1654
1483EN-BI	Biscuit			$ 1654
1483EN-BO	Bone			$ 1654
1483EN-WH	White			$ 1619

1483EN - TWO VERTICAL ENTRY BARS AND FOLDING SEAT

SKU	Color	Configuration	Dimensions & Weight	MSRP
1483EN-AL	Almond	Center Drain Two Vertical Entry Bars and Folding Seat	46” x 36” x 75 5/8” / 118 lb 1168mm x 914mm x 1921mm / 53.51 kg	$ 2995
1483EN-BI	Biscuit			$ 2995
1483EN-BO	Bone			$ 2995
1483EN-WH	White			$ 2960

OPTIONS

SKU	Description	MSRP
4200BRASDRSF	2” Brass Surefit Joint Shower Drain Brass drain material Snap in strainer-stainless steel No-caulk connection.	$ 48
7175DISH	Stainless steel soap dish	$ 119
1VAL300	Single hand chrome pressure balancing mixing valve suitable for commercial use. One-piece ceramic cartridge. Maximum temperature limit stop Installed on right wall	$ 443

OPTIONS

SKU	Description	MSRP
1VAL300	Single hand chrome pressure balancing mixing valve suitable for commercial use. One-piece ceramic cartridge. Maximum temperature limit stop Installed on left wall	$ 443
1VAL300	Single hand chrome pressure balancing mixing valve suitable for commercial use. One-piece ceramic cartridge. Maximum temperature limit stop Installed on back wall	$ 443
1SH0107COMPLETE	Handheld shower assembly with 30 inch slide bar and 60 inch hose. Installed on right wall	$ 417
1SH0107COMPLETE	Handheld shower assembly with 30 inch slide bar and 60 inch hose. Installed on left wall	$ 417
1SH0107COMPLETE	Handheld shower assembly with 30 inch slide bar and 60 inch hose. Installed on back wall	$ 417
S7242ROD	1” diameter Stainless Steel curtain rod	$ 89
42CURTAIN	Shipped loose	$ 125
35RKBO	Finish repair kit - Case of 12 Available in White **(WH)**, or Bone **(BO)**,	$ 303
35RKWH		$ 303
1BAR140W	Stainless steel accessible 24 inch grab bar, 1-1/4 inch diameter, concealed flanges All grab bars are factory installed and not sold separately. Available finishes: Stainless Steel**(SS)**, Powder Coated White **(W)**	$ 271
1BAR140SS		$ 226
S7033SEATL	White fold-up single cushioned seat (factory installed) Installed on Left side wall	$ 801
S7033SEATLR	White fold-up single cushioned seat (factory installed) Installed on Right side wall	$ 801
S7033PHENL	Solid fold-up phenolic seat with slats for drainage (factory installed) Installed on Left side wall Available finishes: White **(WH)**, Teak**(TK)**	$ 1120
S7033PHENWL		$ 1120
S7033PHENWR	Solid fold-up phenolic seat with slats for drainage (factory installed) Installed on Right side wall Available finishes: White **(WH)**, Teak**(TK)**	$ 1120
S7033PHENR		$ 1120

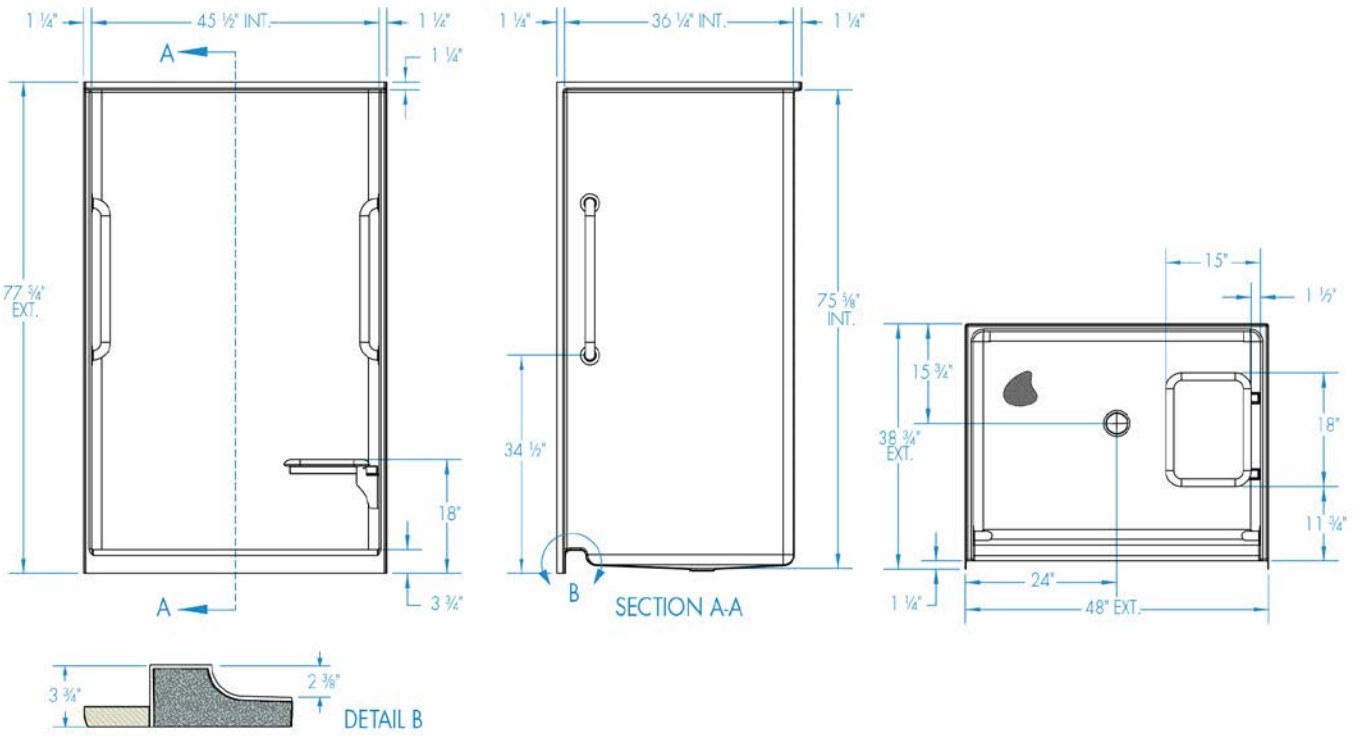
1 ¼"
45 ½" INT.
1 ¼"
1 ¼"
A
77 ¾" EXT.
18"
3 ¾"
A
1 ¼"
36 ¼" INT.
1 ¼"
75 ⅜" INT.
34 ½"
B
SECTION A-A
15"
1 ½"
15 ¾"
38 ¾" EXT.
18"
11 ¾"
24"
1 ¼"
48" EXT.
3 ¾"
2 ⅜"
DETAIL B

1483TSCH



Material : AcrylX™

Features

- 1-Piece shower
- AcrylX™ applied acrylic surface
- Low threshold-3 Inch skirt
- 2 1/2 Inch interior threshold
- Slip-resistant textured floor for safety
- Smooth wall is easy to clean
- Molded toiletry shelves
- Center drain
- Interior dimensions: 46 Inches x 33 Inches x 75 Inches
- Exterior dimensions: 48 Inches x 35 Inches x 76-1/2 Inches

1483TSCH - PRICING CATEGORY : FL

SKU	Color	Configuration	Dimensions & Weight	MSRP
1483TSCH-AL	Almond	Center Drain	46” x 33” x 75” / 119 lb 1168mm x 838mm x 1905mm / 53.97 kg	$ 1288
1483TSCH-BI	Biscuit			$ 1288
1483TSCH-BO	Bone			$ 1288
1483TSCH-WH	White			$ 1253

1483TSCH - TWO VERTICAL ENTRY BARS AND FOLDING SEAT

SKU	Color	Configuration	Dimensions & Weight	MSRP
1483TSCH-AL	Almond	Center Drain Two Vertical Entry Bars and Folding Seat	46” x 33” x 75” / 119 lb 1168mm x 838mm x 1905mm / 53.97 kg	$ 2629
1483TSCH-BI	Biscuit			$ 2629
1483TSCH-BO	Bone			$ 2629
1483TSCH-WH	White			$ 2594

OPTIONS

SKU	Description	MSRP
4200BRASDRSF	2” Brass Surefit Joint Shower Drain Brass drain material Snap in strainer-stainless steel No-caulk connection.	$ 48
7175DISH	Stainless steel soap dish	$ 119
1VAL300	Single hand chrome pressure balancing mixing valve suitable for commercial use. One-piece ceramic cartridge. Maximum temperature limit stop Installed on right wall	$ 443

OPTIONS

SKU	Description	MSRP
1VAL300	Single hand chrome pressure balancing mixing valve suitable for commercial use. One-piece ceramic cartridge. Maximum temperature limit stop Installed on left wall	$ 443
1VAL300	Single hand chrome pressure balancing mixing valve suitable for commercial use. One-piece ceramic cartridge. Maximum temperature limit stop Installed on back wall	$ 443
1SH0107COMPLETE	Handheld shower assembly with 30 inch slide bar and 60 inch hose. Installed on right wall	$ 417
1SH0107COMPLETE	Handheld shower assembly with 30 inch slide bar and 60 inch hose. Installed on left wall	$ 417
1SH0107COMPLETE	Handheld shower assembly with 30 inch slide bar and 60 inch hose. Installed on back wall	$ 417
S7242ROD	1” diameter Stainless Steel curtain rod	$ 89
48CURTAIN	Curtain for 48” model Shipped loose	$ 119
35RKBO	Finish repair kit - Case of 12 Available in White **(WH)**, or Bone **(BO)**,	$ 303
35RKWH		$ 303
1BAR140W	Stainless steel accessible 24 inch grab bar, 1-1/4 inch diameter, concealed flanges All grab bars are factory installed and not sold separately. Available finishes: Stainless Steel**(SS)**, Powder Coated White **(W)**	$ 271
1BAR140SS		$ 226
S7033SEATL	White fold-up single cushioned seat (factory installed) Installed on Left side wall	$ 801
S7033SEATLR	White fold-up single cushioned seat (factory installed) Installed on Right side wall	$ 801
S7033PHENL	Solid fold-up phenolic seat with slats for drainage (factory installed) Installed on Left side wall Available finishes: White **(WH)**, Teak**(TK)**	$ 1120
S7033PHENWL		$ 1120
S7033PHENWR	Solid fold-up phenolic seat with slats for drainage (factory installed) Installed on Right side wall Available finishes: White **(WH)**, Teak**(TK)**	$ 1120
S7033PHENR		$ 1120

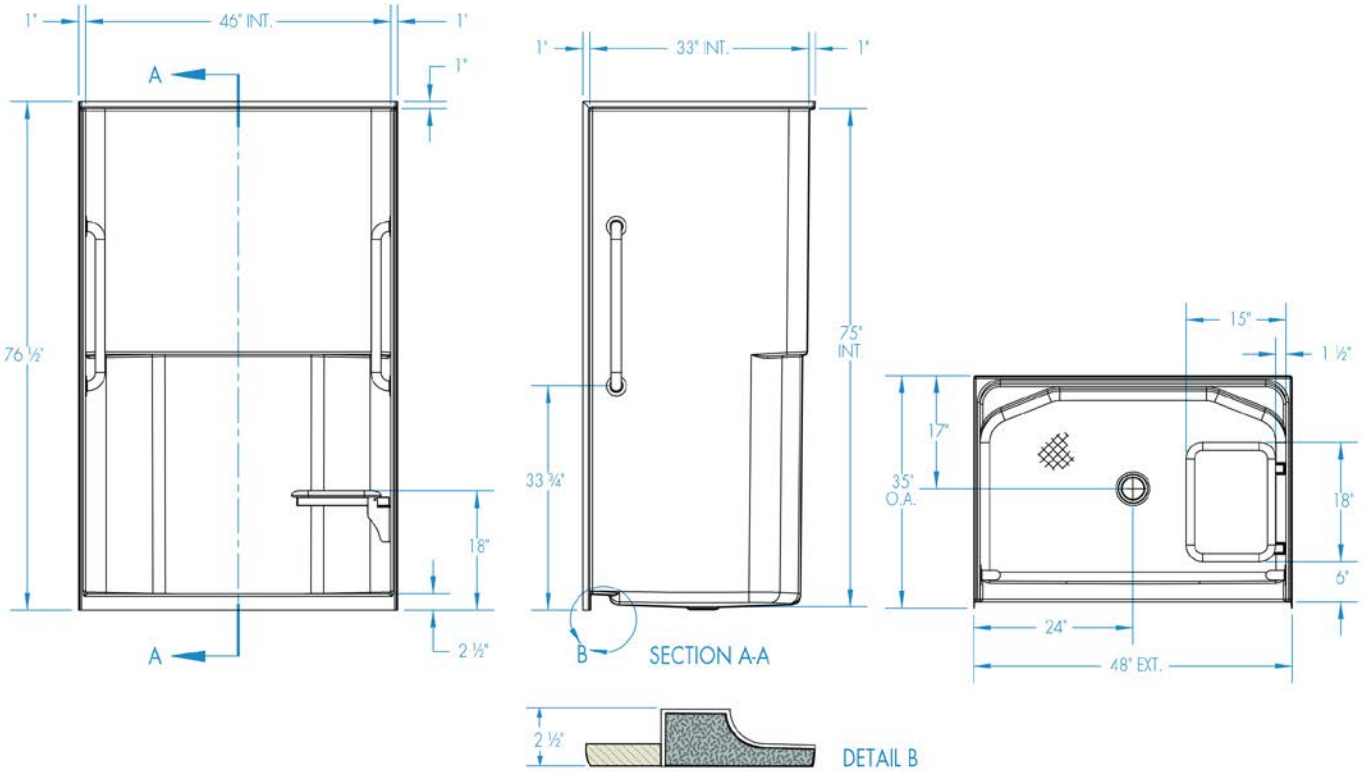
1"
46" INT.
1"
1"
A
76 ½"
18"
2 ½"
A
1"
33" INT.
1"
75" INT.
33 ¾"
B
SECTION A-A
2 ½"
DETAIL B
15"
1 ½"
17"
35" O.A.
18"
6"
24"
48" EXT.

1483TSTH





Material : AcrylX™

Features

- 1-Piece Shower
- AcrylX™ applied acrylic surface
- Slip-resistant textured floor for safety
- 2 1/2 Inchskirt
- 1 1/2 Inch interior threshold
- Smooth tile
- Center drain
- Molded seat (LH or RH)
- Molded toiletry shelves
- Interior dimensions: 46 Inches x 34-1/4 Inches x 75 Inches
- Exterior dimensions: 48 Inches x 36-1/4 Inches x 76-1/2 Inches

1483TSTH - PRICING CATEGORY : FL

SKU	Color	Configuration	Dimensions & Weight	MSRP
1483TSTHL-AL	Almond	Base Model with Integral Right Hand Seat, Center Drain with no Accessories	46” x 34” x 75” / 110 lb 1168mm x 864mm x 1905mm / 49.89 kg	$ 1383
1483TSTHL-BI	Biscuit			$ 1383
1483TSTHL-BO	Bone			$ 1383
1483TSTHL-WH	White			$ 1348

1483TSTH - U-BAR

SKU	Color	Configuration	Dimensions & Weight	MSRP
1483TSTHL-AL	Almond	Center Drain U-Bar	46” x 34” x 75” / 110 lb 1168mm x 864mm x 1905mm / 49.89 kg	$ 2021
1483TSTHL-BI	Biscuit			$ 2021
1483TSTHL-BO	Bone			$ 2021
1483TSTHL-WH	White			$ 1986

OPTIONS

SKU	Description	MSRP
4200BRASDRSF	2” Brass Surefit Joint Shower Drain Brass drain material Snap in strainer-stainless steel No-caulk connection.	$ 48
7175DISH	Stainless steel soap dish	$ 119
1VAL300	Single hand chrome pressure balancing mixing valve suitable for commercial use. One-piece ceramic cartridge. Maximum temperature limit stop Installed on right wall	$ 443

OPTIONS

SKU	Description	MSRP
1VAL300	Single hand chrome pressure balancing mixing valve suitable for commercial use. One-piece ceramic cartridge. Maximum temperature limit stop Installed on left wall	$ 443
1VAL300	Single hand chrome pressure balancing mixing valve suitable for commercial use. One-piece ceramic cartridge. Maximum temperature limit stop Installed on back wall	$ 443
1SH0107COMPLETE	Handheld shower assembly with 30 inch slide bar and 60 inch hose. Installed on right wall	$ 417
1SH0107COMPLETE	Handheld shower assembly with 30 inch slide bar and 60 inch hose. Installed on left wall	$ 417
1SH0107COMPLETE	Handheld shower assembly with 30 inch slide bar and 60 inch hose. Installed on back wall	$ 417
S7242ROD	1” diameter Stainless Steel curtain rod	$ 89
48CURTAIN	Curtain for 48” model Shipped loose	$ 119
35RKBO	Finish repair kit - Case of 12 Available in White **(WH)**, or Bone **(BO)**,	$ 303
35RKWH		$ 303
1BAR109W	Stainless steel accessible 18 inch vertical grab bar, 1-1/4 inch diameter, concealed flanges All grab bars are factory installed and not sold separately. Available finishes: Stainless Steel**(SS)**, Powder Coated White **(W)**	$ 237
1BAR109SS		$ 186
1BAR140W	Stainless steel accessible 24 inch grab bar, 1-1/4 inch diameter, concealed flanges All grab bars are factory installed and not sold separately. Available finishes: Stainless Steel**(SS)**, Powder Coated White **(W)**	$ 271
1BAR140SS		$ 226

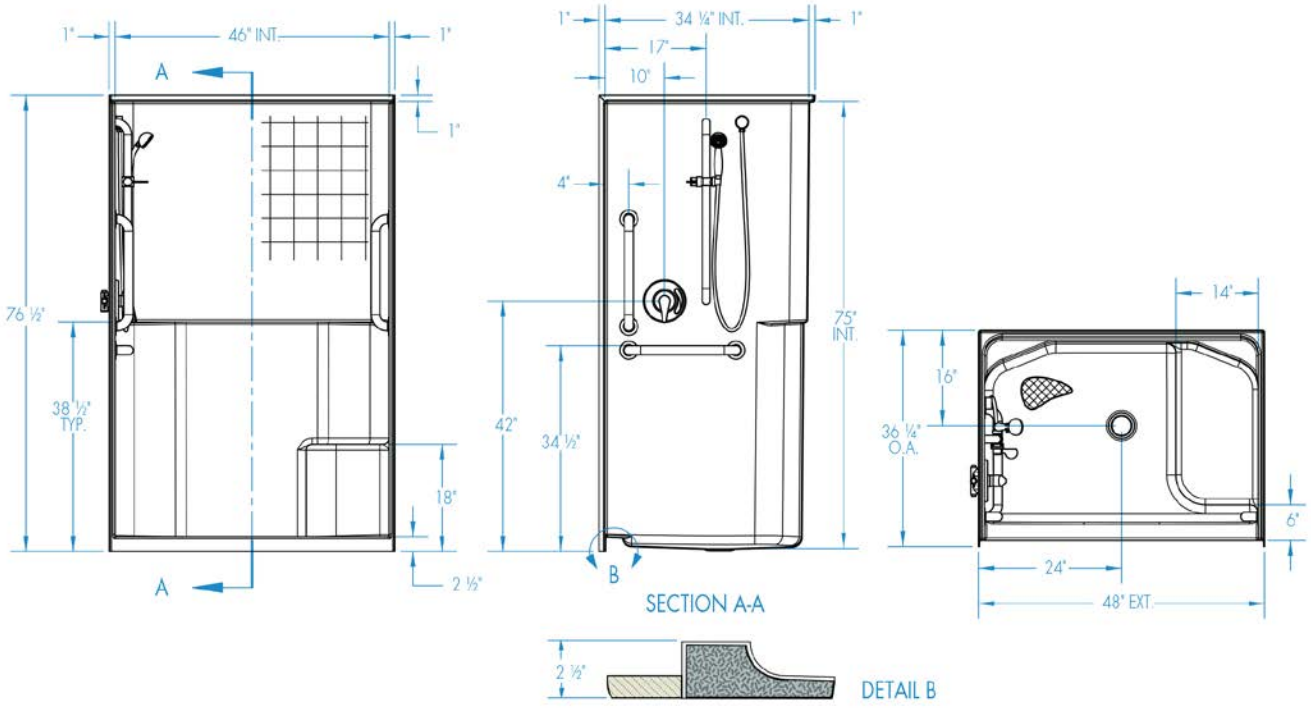
1"
46" INT.
1"
A
1"
76 ½"
38 ½"
TYP.
18"
2 ½"
A
1"
34 ¼" INT.
1"
17"
10"
4"
42"
34 ½"
75"
INT.
B
SECTION A-A
14"
16"
36 ¼"
O.A.
6"
24"
48" EXT.
2 ½"
DETAIL B

15836FHA



Material : AcrylX™

Features

- 1-piece shower
- FHA/ANSI B Compliant
- Low threshold -3-1/2 Inch skirt
- Smooth wall is easy to clean
- Return flanges on both sides
- Slip-resistant textured floor for safety
- Interior dimensions: 36 Inches x 36 Inches x 77-1/4 Inches
- Exterior dimensions: 41-1/2 Inches x 39-3/8 Inches x 79 Inches

15836FHA - PRICING CATEGORY : FL

SKU	Color	Configuration	Dimensions & Weight	MSRP
155836FHA-AL	Almond	Center Drain	58” x 36” x 77 1/4” / 140 lb 1473mm x 914mm x 1962mm / 63.49 kg	$ 2654
15836FHA-BI	Biscuit			$ 2654
15836FHA-BO	Bone			$ 2654
15836FHA-WH	White			$ 2619

OPTIONS

SKU	Description	MSRP
4200BRASDRSF	2” Brass Surefit Joint Shower Drain Brass drain material Snap in strainer-stainless steel No-caulk connection.	$ 48
1BAR140W	Stainless steel accessible 24 inch grab bar, 1-1/4 inch diameter, concealed flanges Custom location installation; drawing required. All grab bars are factory installed and not sold separately. Not all bars available on all units, consult customer care. Available finishes: Stainless Steel**(SS)**, Powder Coated White **(W)**,	$ 271
1BAR140SS	Stainless steel accessible 24 inch grab bar, 1-1/4 inch diameter, concealed flanges Custom location installation; drawing required. All grab bars are factory installed and not sold separately. Not all bars available on all units, consult customer care. Available finishes: Stainless Steel**(SS)**, Powder Coated White **(W)**,	$ 226
1BAR903SS	Stainless steel accessible L-shaped grab bar. 18 x 32 inches , 1-1/4 inch diameter, concealed flanges Custom location installation; drawing required. All grab bars are factory installed and not sold separately. Not all bars available on all units, consult customer care. Available finishes: Stainless Steel**(SS)**, Powder Coated White **(W)**,	$ 319
1BAR459W		$ 482
7175DISH	Stainless steel soap dish	$ 119
1VAL300	Single hand chrome pressure balancing mixing valve suitable for commercial use. One-piece ceramic cartridge. Maximum temperature limit stop Installed on right wall	$ 443

OPTIONS

SKU	Description	MSRP
1VAL300	Single hand chrome pressure balancing mixing valve suitable for commercial use. One-piece ceramic cartridge. Maximum temperature limit stop Installed on left wall	$ 443
1SH0107COMPLETE	Handheld shower assembly with 30 inch slide bar and 60 inch hose. Installed on right wall	$ 417
1SH0107COMPLETE	Handheld shower assembly with 30 inch slide bar and 60 inch hose. Installed on left wall	$ 417
S7242ROD	1” diameter Stainless Steel curtain rod	$ 89
48CURTAIN	Curtain for 48” model Shipped loose	$ 119
35RKBO	Finish repair kit - Case of 12 Available in White **(WH)**, or Bone **(BO)**,	$ 303
35RKWH		$ 303
S7036LPHENL	Fold-up phenolic seat (factory installed) Installed on Left side wall Available finishes: White **(WH)**, Teak**(TK)**	$ 925
S7036LPHENWHL		$ 925
S7036LPHENR		$ 925
S7036LPHENWHR		$ 925
S7036LCUSHL	White fold-up L-shaped cushioned seat (factory installed) Installed on Left side wall	$ 889
S7036LCUSHR	White fold-up L-shaped cushioned seat (factory installed) Installed on Right side wall	$ 889

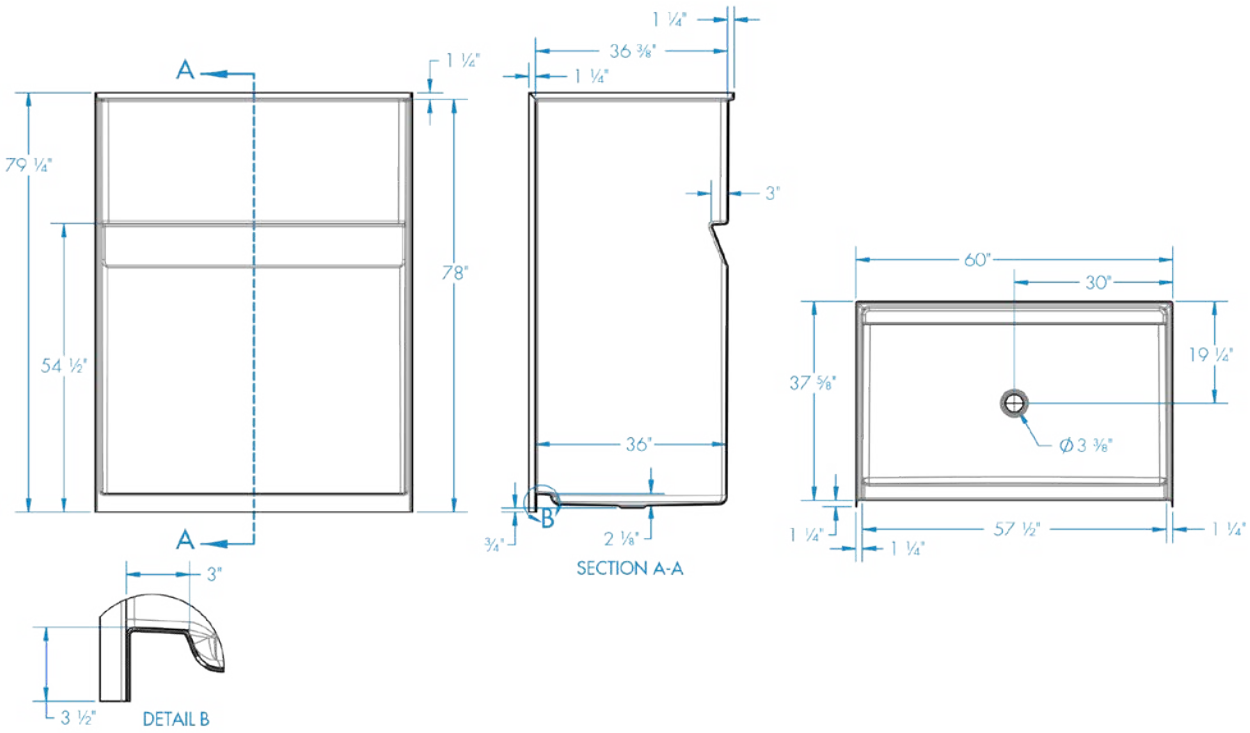
A
A
79 ¼"
54 ½"
1 ½"
78"
1 ¼"
36 ⅜"
1 ¼"
3"
36"
¾"
B
2 ⅛"
SECTION A-A
60"
30"
37 ⅝"
19 ¼"
Ø 3 ⅜"
1 ¼"
57 ½"
1 ¼"
1 ¼"
3"
3 ½"
DETAIL B

16030BFSBTTR





Material : AcrylX™

Features

- 1-Piece Shower
- AcrylX™ applied acrylic surface
- Slip-resistant textured floor for safety
- 1/2 Inch skirt
- 1/2 Inch change of level (COL) exterior threshold
- Barrier free when properly installed
- Smooth large 12 Inch x 24 Inch subway tile wall
- Center drain outlet
- Integral front trench drain
- Level Base
- Interior dimensions: 60 Inches x 30 Inches x 76-3/4 Inches
- Exterior dimensions: 66 Inches x 32-1/8 Inches x 78-3/4 Inches Residential Use
- Stainless steel grate

16030BFSBTTR - PRICING CATEGORY : FL

SKU	Color	Configuration	Dimensions & Weight	MSRP
16030BFSBTTR-BI	Biscuit	Center Drain	60” x 30” x 76 3/4” / 200 lb 1524mm x 762mm x 1949mm / 90.7 kg	Quote Only
16030BFSBTTR-BO	Bone			Quote Only
16030BFSBTTR-WH	White			Quote Only

16030BFSBTTR - ADA COMPLIANT CONFIGURATION

SKU	Color	Configuration	Dimensions & Weight	MSRP
16030BFSBTTR-BI	Biscuit	Center Drain ADA Compliant Configuration	60” x 30” x 76 3/4” / 200 lb 1524mm x 762mm x 1949mm / 90.7 kg	Quote Only
16030BFSBTTR-BO	Bone			Quote Only
16030BFSBTTR-WH	White			Quote Only

16030BFSBTTR - ADA COMPLIANT CONFIGURATION WITHOUT SEAT

SKU	Color	Configuration	Dimensions & Weight	MSRP
16030BFSBTTR-BI	Biscuit	Center Drain ADA Compliant Configuration without Seat	60” x 30” x 76 3/4” / 200 lb 1524mm x 762mm x 1949mm / 90.7 kg	Quote Only
16030BFSBTTR-BO	Bone			Quote Only
16030BFSBTTR-WH	White			Quote Only

16030BFSBTTR - ANSI COMPLIANT CONFIGURATION

SKU	Color	Configuration	Dimensions & Weight	MSRP
16030BFSBTTR-BI	Biscuit	Center Drain ANSI Compliant Configuration	60” x 30” x 76 3/4” / 200 lb 1524mm x 762mm x 1949mm / 90.7 kg	Quote Only
16030BFSBTTR-BO	Bone			Quote Only
16030BFSBTTR-WH	White			Quote Only

16030BFSBTTR - L-BAR CONFIGURATION

SKU	Color	Configuration	Dimensions & Weight	MSRP
16030BFSBTTR-BI	Biscuit	Center Drain L-Bar Configuration	60” x 30” x 76 3/4” / 200 lb 1524mm x 762mm x 1949mm / 90.7 kg	Quote Only
16030BFSBTTR-BO	Bone			Quote Only
16030BFSBTTR-WH	White			Quote Only

16030BFSBTTR - L-BAR CONFIGURATION AND FOLDING SEAT

SKU	Color	Configuration	Dimensions & Weight	MSRP
16030BFSBTTR-WH	White	Center Drain L-Bar Configuration and Folding Seat	60” x 30” x 76 3/4” / 200 lb 1524mm x 762mm x 1949mm / 90.7 kg	Quote Only

16030BFSBTTR - U-BAR

SKU	Color	Configuration	Dimensions & Weight	MSRP
16030BFSBTTR-BI	Biscuit	Center Drain U-Bar	60” x 30” x 76 3/4” / 200 lb 1524mm x 762mm x 1949mm / 90.7 kg	Quote Only
16030BFSBTTR-BO	Bone			Quote Only
16030BFSBTTR-WH	White			Quote Only

OPTIONS

SKU	Description	MSRP
4200BRASDRSF	2” Brass Surefit Joint Shower Drain Brass drain material Snap in strainer-stainless steel No-caulk connection.	$ 48
SMSOAPDISH	Small soap dish shipped loose	$ 188
LGSOAPDISH	Large soap dish shipped loose	$ 264
1VAL300	Single hand chrome pressure balancing mixing valve suitable for commercial use. One-piece ceramic cartridge. Maximum temperature limit stop Installed on right wall	$ 443
1VAL300	Single hand chrome pressure balancing mixing valve suitable for commercial use. One-piece ceramic cartridge. Maximum temperature limit stop Installed on left wall	$ 443
1VAL300	Single hand chrome pressure balancing mixing valve suitable for commercial use. One-piece ceramic cartridge. Maximum temperature limit stop Installed on back wall	$ 443
1SH0107COMPLETE	Handheld shower assembly with 30 inch slide bar and 60 inch hose. Installed on right wall	$ 417
1SH0107COMPLETE	Handheld shower assembly with 30 inch slide bar and 60 inch hose. Installed on left wall	$ 417
1SH0107COMPLETE	Handheld shower assembly with 30 inch slide bar and 60 inch hose. Installed on back wall	$ 417

OPTIONS

SKU	Description	MSRP
TRENCHMAT	Underaly ramp for trench drain shower models Quantity of (2)	$ 405
60SHFWBALL	Extra reinforcement for after market accessories installment on all walls.	$ 406
M-60WGRATE	Optional powder coated white trench grate. Unit comes standard with Stainless Steel.	$ 1041
1BAR109W	Stainless steel accessible 18 inch vertical grab bar, 1-1/4 inch diameter, concealed flanges All grab bars are factory installed and not sold separately. Available finishes: Stainless Steel**(SS)**, Powder Coated White **(W)**	$ 237
1BAR109SS		$ 186
1S2621PDL	White fold-up L-shaped cushioned seat (factory installed) Installed on Left side wall	$ 889
1S2621PDR	White fold-up L-shaped cushioned seat (factory installed) Installed on Right side wall	$ 889
1S2621PHWL	Solid fold-up phenolic seat with slats for drainage (factory installed) Installed on Left side wall Available finishes: White **(WH)**, Teak**(TK)**	$ 925
1S2621PHWR	Solid fold-up phenolic seat with slats for drainage (factory installed) Installed on Right side wall Available finishes: White **(WH)**, Teak**(TK)**	$ 925
1S2621PHR		$ 925
M-BAR113125SS	Package: Stainless steel accessible L-bar configuration (1) 20 inch and (1) 30 inch: 1-1/4 inch diameter, concealed flanges All grab bars are factory installed and not sold separately. Available finishes: Stainless Steel**(SS)**	$ 398
M-BAR113153SS	Package: Stainless steel accessible U-bar configuration (2) 20 inch and (1) 48 inch: 1-1/4 inch diameter, concealed flanges All grab bars are factory installed and not sold separately. Available finishes: Stainless Steel**(SS)**	$ 657
1CUR132WHT	66 inch x 72 inch white premium weighted shower curtain Shipped loose	$ 371
1ROD114SS	1” diameter Stainless Steel curtain rod	$ 125

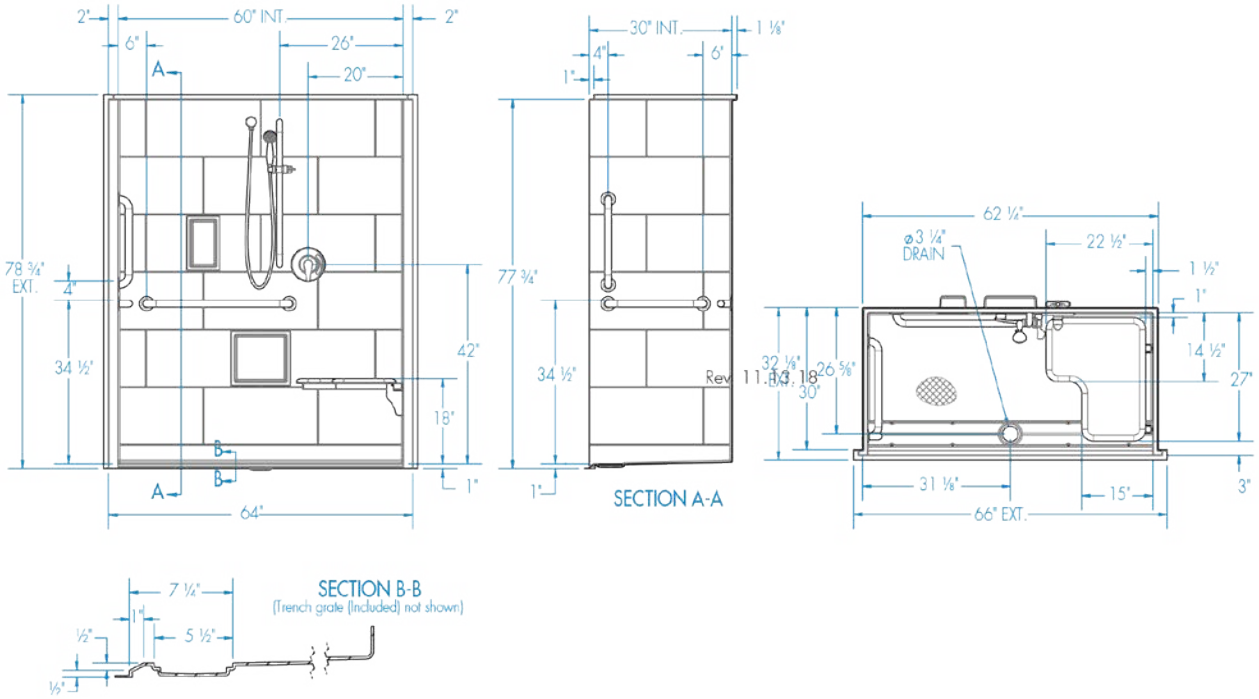
2"
60" INT.
2"
6"
26"
20"
A
78 ¾"
EXT.
4"
34 ½"
42"
18"
B
B
A
1"
64"
30" INT.
1 ⅛"
4"
6"
1"
77 ¾"
34 ½"
1"
SECTION A-A
62 ¼"
⌀3 ¼"
DRAIN
22 ½"
1 ½"
1"
14 ½"
27"
32 ⅛"
30"
26 ⅝"
3"
31 ⅛"
15"
66" EXT.
7 ¼"
1"
½"
5 ½"
½"
SECTION B-B
(Trench grate (Included) not shown)

16030BFSC





Material : AcrylX™

Features

- 1-Piece Shower
- Pre-leveled base
- AcrylX™ applied acrylic surface
- 1/4 Inch skirt
- 1/2 Inch beveled threshold
- Barrier free when properly installed
- Slip-resistant textured floor for safety
- Smooth wall finish is easy to clean
- Center drain
- Interior dimensions: 60 Inches x 30-1/4 Inches x 77-1/2 Inches
- Exterior dimensions: 62-3/8 Inches x 32-3/4 Inches x 78-1/2 Inches

16030BFSC - PRICING CATEGORY : FL

SKU	Color	Configuration	Dimensions & Weight	MSRP
16030BFSC-AL	Almond	Center Drain	60” x 30” x 77 1/2” / 180 lb 1524mm x 762mm x 1969mm / 81.63 kg	$ 1707
16030BFSC-BI	Biscuit			$ 1707
16030BFSC-BO	Bone			$ 1707
16030BFSC-WH	White			$ 1672

16030BFSC - ADA COMPLIANT CONFIGURATION

SKU	Color	Configuration	Dimensions & Weight	MSRP
16030BFSC-AL	Almond	Center Drain ADA Compliant Configuration	60” x 30” x 77 1/2” / 180 lb 1524mm x 762mm x 1969mm / 81.63 kg	$ 3832
16030BFSC-BI	Biscuit			$ 3832
16030BFSC-BO	Bone			$ 3832
16030BFSC-WH	White			$ 3797

16030BFSC - ADA COMPLIANT CONFIGURATION WITHOUT SEAT

SKU	Color	Configuration	Dimensions & Weight	MSRP
16030BFSC-AL	Almond	Center Drain ADA Compliant Configuration without Seat	60” x 30” x 77 1/2” / 180 lb 1524mm x 762mm x 1969mm / 81.63 kg	$ 3180
16030BFSC-BI	Biscuit			$ 3180
16030BFSC-BO	Bone			$ 3180
16030BFSC-WH	White			$ 3145

16030BFSC - ANSI COMPLIANT CONFIGURATION

SKU	Color	Configuration	Dimensions & Weight	MSRP
16030BFSC-AL	Almond	Center Drain ANSI Compliant Configuration	60” x 30” x 77 1/2” / 180 lb 1524mm x 762mm x 1969mm / 81.63 kg	$ 4018
16030BFSC-BI	Biscuit			$ 4018
16030BFSC-BO	Bone			$ 4018
16030BFSC-WH	White			$ 3983

16030BFSC - L-BAR CONFIGURATION

SKU	Color	Configuration	Dimensions & Weight	MSRP
16030BFSC-AL	Almond	Center Drain L-Bar Configuration	60” x 30” x 77 1/2” / 180 lb 1524mm x 762mm x 1969mm / 81.63 kg	$ 2083
16030BFSC-BI	Biscuit			$ 2083
16030BFSC-BO	Bone			$ 2083
16030BFSC-WH	White			$ 2048

16030BFSC - L-BAR CONFIGURATION AND FOLDING SEAT

SKU	Color	Configuration	Dimensions & Weight	MSRP
16030BFSC-AL	Almond	Center Drain L-Bar Configuration and Folding Seat	60” x 30” x 77 1/2” / 180 lb 1524mm x 762mm x 1969mm / 81.63 kg	$ 2972
16030BFSC-BI	Biscuit			$ 2972
16030BFSC-BO	Bone			$ 2972
16030BFSC-WH	White			$ 2937

16030BFSC - U-BAR

SKU	Color	Configuration	Dimensions & Weight	MSRP
16030BFSC-AL	Almond	Center Drain U-Bar	60” x 30” x 77 1/2” / 180 lb 1524mm x 762mm x 1969mm / 81.63 kg	$ 2320
16030BFSC-BI	Biscuit			$ 2320
16030BFSC-BO	Bone			$ 2320
16030BFSC-WH	White			$ 2285

OPTIONS

SKU	Description	MSRP
4200BRASDRSF	2” Brass Surefit Joint Shower Drain Brass drain material Snap in strainer-stainless steel No-caulk connection.	$ 48
7175DISH	Stainless steel soap dish	$ 119
1VAL300	Single hand chrome pressure balancing mixing valve suitable for commercial use. One-piece ceramic cartridge. Maximum temperature limit stop Installed on right wall	$ 443
1VAL300	Single hand chrome pressure balancing mixing valve suitable for commercial use. One-piece ceramic cartridge. Maximum temperature limit stop Installed on left wall	$ 443
1VAL300	Single hand chrome pressure balancing mixing valve suitable for commercial use. One-piece ceramic cartridge. Maximum temperature limit stop Installed on back wall	$ 443

OPTIONS

SKU	Description	MSRP
1SH0107COMPLETE	Handheld shower assembly with 30 inch slide bar and 60 inch hose. Installed on right wall	$ 417
1SH0107COMPLETE	Handheld shower assembly with 30 inch slide bar and 60 inch hose. Installed on left wall	$ 417
1SH0107COMPLETE	Handheld shower assembly with 30 inch slide bar and 60 inch hose. Installed on back wall	$ 417
S72360ROD	1” diameter Stainless Steel curtain rod for 60” model	$ 101
60CURTAIN	Curtain for 60” model Shipped loose	$ 156
VINYLDAM	Vinyl dam for barrier free showers. Ideal for water containment.	$ 125
35RKBO	Finish repair kit - Case of 12 Available in White **(WH)**, or Bone **(BO)**,	$ 303
35RKWH		$ 303
1BAR109W	Stainless steel accessible 18 inch vertical grab bar, 1-1/4 inch diameter, concealed flanges All grab bars are factory installed and not sold separately. Available finishes: Stainless Steel**(SS)**, Powder Coated White **(W)**	$ 237
1BAR109SS		$ 186
S7027LCUSHL	White fold-up L-shaped cushioned seat (factory installed) Installed on Left side wall	$ 889
S7027LCUSHR	White fold-up L-shaped cushioned seat (factory installed) Installed on Right side wall	$ 889
S7027PHENL	Rectgangular fold-up phenolic seat (factory installed) MASS Compliant Installed on Left side wall Available finishes: White **(WH)**, Teak**(TK)**	$ 925
S7027PHENWL		$ 925
S7027LCUSHR		$ 847
S16030HGRAB	Package: Stainless steel accessible L-bar configuration (1) 22 inch and (1) 30 inch: 1-1/4 inch diameter, concealed flanges All grab bars are factory installed and not sold separately. Available finishes: Stainless Steel**(SS)**	$ 376
S16030UGRAB	Package: Stainless steel accessible U-bar configuration (2) 22 inch and (1) 48 inch: 1-1/4 inch diameter, concealed flanges All grab bars are factory installed and not sold separately. Available finishes: Stainless Steel**(SS)**	$ 613
S7027PHENR	Rectgangular fold-up phenolic seat (factory installed) MASS Compliant Installed on Right side wall Available finishes: White **(WH)**, Teak**(TK)**	$ 925
S7027PHENWR		$ 925

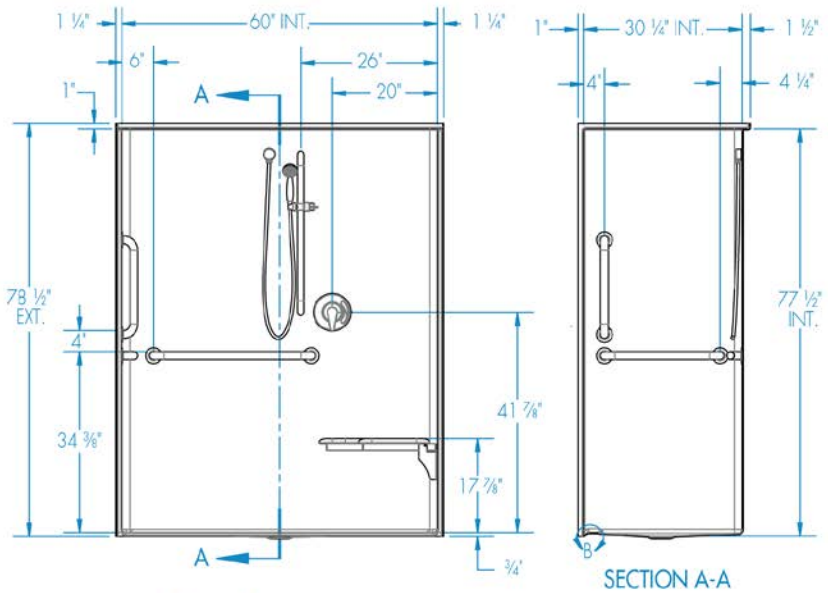
1 ¼"
60" INT.
1 ¼"
6"
26"
20"
1"
A
78 ½" EXT.
4"
34 ⅜"
41 ⅞"
17 ⅞"
¾"
A
1"
30 ¼" INT.
1 ½"
4"
4 ¼"
77 ½" INT.
B
SECTION A-A
22 ½"
1 ½"
Ø 3 ¼" DRAIN
1 ¼"
17"
32 ¾" EXT.
27 ¼"
31 ¼"
15"
3"
62 ⅜" EXT.

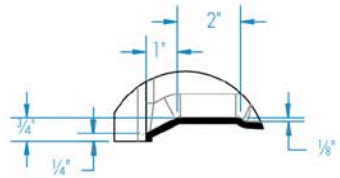
2"
1"
¾"
¼"
⅛"

DETAIL B

16030BFSCTTR





Material : AcrylX™

Features

- 1-Piece Shower
- AcrylX™ applied acrylic surface
- Slip-resistant textured floor for safety
- 1-1⁄8 Inch skirt
- Barrier free when properly installed
- Smooth large 12 Inch x 24 Inch subway tile wall
- Center front drain outlet
- Integral front trench drain
- Interior dimensions: 60 Inches x 30 Inches x 76-3/4 Inches
- Exterior dimensions: 66 Inches x 32-1/8 Inches x 78-3/4 Inches
- Level Base
- Stainless steel grate

16030BFSCTTR - PRICING CATEGORY : FL

SKU	Color	Configuration	Dimensions & Weight	MSRP
16030BFSCTTR-BI	Biscuit	Center Drain	60” x 30” x 76 3/4” / 200 lb 1524mm x 762mm x 1949mm / 90.7 kg	Quote Only
16030BFSCTTR-BO	Bone			Quote Only
16030BFSCTTR-WH	White			Quote Only

16030BFSCTTR - ADA COMPLIANT CONFIGURATION

SKU	Color	Configuration	Dimensions & Weight	MSRP
16030BFSCTTR-BI	Biscuit	Center Drain ADA Compliant Configuration	60” x 30” x 76 3/4” / 200 lb 1524mm x 762mm x 1949mm / 90.7 kg	Quote Only
16030BFSCTTR-BO	Bone			Quote Only
16030BFSCTTR-WH	White			Quote Only

16030BFSCTTR - ADA COMPLIANT CONFIGURATION WITHOUT SEAT

SKU	Color	Configuration	Dimensions & Weight	MSRP
16030BFSCTTR-BI	Biscuit	Center Drain ADA Compliant Configuration without Seat	60” x 30” x 76 3/4” / 200 lb 1524mm x 762mm x 1949mm / 90.7 kg	Quote Only
16030BFSCTTR-BO	Bone			Quote Only
16030BFSCTTR-WH	White			Quote Only

16030BFSCTTR - ANSI COMPLIANT CONFIGURATION

SKU	Color	Configuration	Dimensions & Weight	MSRP
16030BFSCTTR-BI	Biscuit	Center Drain ANSI Compliant Configuration	60” x 30” x 76 3/4” / 200 lb 1524mm x 762mm x 1949mm / 90.7 kg	Quote Only
16030BFSCTTR-BO	Bone			Quote Only
16030BFSCTTR-WH	White			Quote Only

16030BFSCTTR - L-BAR CONFIGURATION

SKU	Color	Configuration	Dimensions & Weight	MSRP
16030BFSCTTR-BI	Biscuit	Center Drain L-Bar Configuration	60” x 30” x 76 3/4” / 200 lb 1524mm x 762mm x 1949mm / 90.7 kg	Quote Only
16030BFSCTTR-BO	Bone			Quote Only
16030BFSCTTR-WH	White			Quote Only

16030BFSCTTR - L-BAR CONFIGURATION AND FOLDING SEAT

SKU	Color	Configuration	Dimensions & Weight	MSRP
16030BFSCTTR-WH	White	Center Drain L-Bar Configuration and Folding Seat	60” x 30” x 76 3/4” / 200 lb 1524mm x 762mm x 1949mm / 90.7 kg	Quote Only

16030BFSCTTR - U-BAR

SKU	Color	Configuration	Dimensions & Weight	MSRP
16030BFSCTTR-BI	Biscuit	Center Drain U-Bar	60” x 30” x 76 3/4” / 200 lb 1524mm x 762mm x 1949mm / 90.7 kg	Quote Only
16030BFSCTTR-BO	Bone			Quote Only
16030BFSCTTR-WH	White			Quote Only

OPTIONS

SKU	Description	MSRP
4200BRASDRSF	2” Brass Surefit Joint Shower Drain Brass drain material Snap in strainer-stainless steel No-caulk connection.	$ 48
SMSOAPDISH	Small soap dish shipped loose	$ 188
LGSOAPDISH	Large soap dish shipped loose	$ 264
1VAL300	Single hand chrome pressure balancing mixing valve suitable for commercial use. One-piece ceramic cartridge. Maximum temperature limit stop Installed on right wall	$ 443
1VAL300	Single hand chrome pressure balancing mixing valve suitable for commercial use. One-piece ceramic cartridge. Maximum temperature limit stop Installed on left wall	$ 443
1VAL300	Single hand chrome pressure balancing mixing valve suitable for commercial use. One-piece ceramic cartridge. Maximum temperature limit stop Installed on back wall	$ 443
1SH0107COMPLETE	Handheld shower assembly with 30 inch slide bar and 60 inch hose. Installed on right wall	$ 417
1SH0107COMPLETE	Handheld shower assembly with 30 inch slide bar and 60 inch hose. Installed on left wall	$ 417
1SH0107COMPLETE	Handheld shower assembly with 30 inch slide bar and 60 inch hose. Installed on back wall	$ 417

OPTIONS

SKU	Description	MSRP
60SHFWBALL	Extra reinforcement for after market accessories installment on all walls.	$ 406
M-60WGRATE	Optional powder coated white trench grate. Unit comes standard with Stainless Steel.	$ 1041
1BAR109W	Stainless steel accessible 18 inch vertical grab bar, 1-1/4 inch diameter, concealed flanges All grab bars are factory installed and not sold separately. Available finishes: Stainless Steel**(SS)**, Powder Coated White **(W)**	$ 237
1BAR109SS		$ 186
1S2621PDL	White fold-up L-shaped cushioned seat (factory installed) Installed on Left side wall	$ 889
1S2621PDR	White fold-up L-shaped cushioned seat (factory installed) Installed on Right side wall	$ 889
1S2621PHWL	Solid fold-up phenolic seat with slats for drainage (factory installed) Installed on Left side wall Available finishes: White **(WH)**, Teak**(TK)**	$ 925
1S2621PHWR	Solid fold-up phenolic seat with slats for drainage (factory installed) Installed on Right side wall Available finishes: White **(WH)**, Teak**(TK)**	$ 925
1S2621PHR		$ 925
M-BAR113125SS	Package: Stainless steel accessible L-bar configuration (1) 20 inch and (1) 30 inch: 1-1/4 inch diameter, concealed flanges All grab bars are factory installed and not sold separately. Available finishes: Stainless Steel**(SS)**	$ 398
M-BAR113153SS	Package: Stainless steel accessible U-bar configuration (2) 20 inch and (1) 48 inch: 1-1/4 inch diameter, concealed flanges All grab bars are factory installed and not sold separately. Available finishes: Stainless Steel**(SS)**	$ 657
1CUR132WHT	66 inch x 72 inch white premium weighted shower curtain Shipped loose	$ 371
1ROD114SS	1” diameter Stainless Steel curtain rod	$ 125

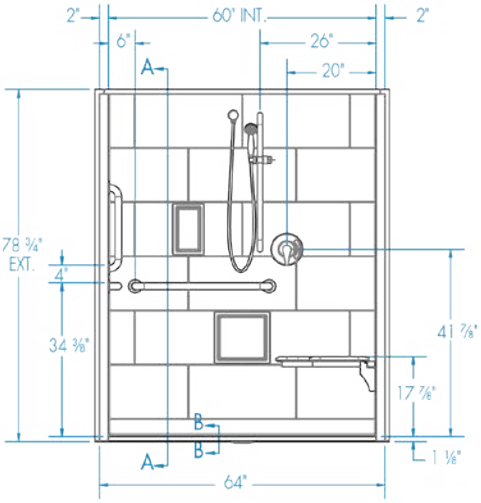

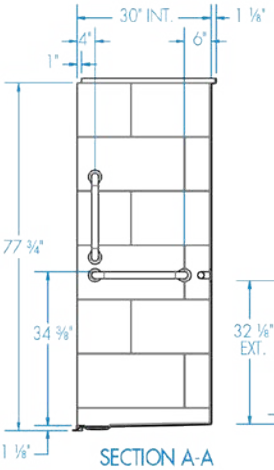

SECTION A-A

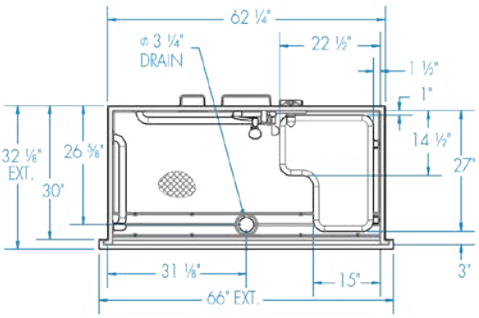

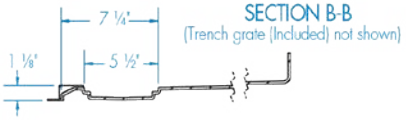

SECTION B-B
(Trench grate (Included) not shown)

16030TRCOL





Material : AcrylX™

Features

- 1-Piece Shower stall
- AcrylX™ applied acrylic surface
- 1 COL Inch skirt
- Barrier free when properly installed
- Smooth large 12 Inch x 24 Inch subway tile wall
- Center front drain outlet
- Integral front trench drain
- Level Base
- Slip-resistant textured floor for safety
- Interior dimensions: 60 Inches x 30 Inches x 76-3/4 Inches
- Exterior dimensions: 62-1/4 Inches x 32-1/8 Inches x 78-3/4 Inches
- Stainless steel Tamper-proof grate

16030TRCOL - PRICING CATEGORY : FL

SKU	Color	Configuration	Dimensions & Weight	MSRP
16030TRCOL-BI	Biscuit	Center Drain	60” x 30” x 76 3/4” / 200 lb 1524mm x 762mm x 1949mm / 90.7 kg	Quote Only
16030TRCOL-BO	Bone			Quote Only
16030TRCOL-WH	White			Quote Only

16030TRCOL - ADA COMPLIANT CONFIGURATION

SKU	Color	Configuration	Dimensions & Weight	MSRP
16030TRCOL-BI	Biscuit	Center Drain ADA Compliant Configuration	60” x 30” x 76 3/4” / 200 lb 1524mm x 762mm x 1949mm / 90.7 kg	Quote Only
16030TRCOL-BO	Bone			Quote Only
16030TRCOL-WH	White			Quote Only

16030TRCOL - ADA COMPLIANT CONFIGURATION WITHOUT SEAT

SKU	Color	Configuration	Dimensions & Weight	MSRP
16030TRCOL-BI	Biscuit	Center Drain ADA Compliant Configuration without Seat	60” x 30” x 76 3/4” / 200 lb 1524mm x 762mm x 1949mm / 90.7 kg	Quote Only
16030TRCOL-BO	Bone			Quote Only
16030TRCOL-WH	White			Quote Only

16030TRCOL - ANSI COMPLIANT CONFIGURATION

SKU	Color	Configuration	Dimensions & Weight	MSRP
16030TRCOL-BI	Biscuit	Center Drain ANSI Compliant Configuration	60” x 30” x 76 3/4” / 200 lb 1524mm x 762mm x 1949mm / 90.7 kg	Quote Only
16030TRCOL-BO	Bone			Quote Only
16030TRCOL-WH	White			Quote Only

16030TRCOL - L-BAR CONFIGURATION

SKU	Color	Configuration	Dimensions & Weight	MSRP
16030TRCOL-BI	Biscuit	Center Drain L-Bar Configuration	60” x 30” x 76 3/4” / 200 lb 1524mm x 762mm x 1949mm / 90.7 kg	Quote Only
16030TRCOL-BO	Bone			Quote Only
16030TRCOL-WH	White			Quote Only

16030TRCOL - L-BAR CONFIGURATION AND FOLDING SEAT

SKU	Color	Configuration	Dimensions & Weight	MSRP
16030TRCOL-BI	Biscuit	Center Drain L-Bar Configuration and Folding Seat	60” x 30” x 76 3/4” / 200 lb 1524mm x 762mm x 1949mm / 90.7 kg	Quote Only
16030TRCOL-BO	Bone			Quote Only
16030TRCOL-WH	White			Quote Only

16030TRCOL - U-BAR

SKU	Color	Configuration	Dimensions & Weight	MSRP
16030TRCOL-BI	Biscuit	Center Drain U-Bar	60” x 30” x 76 3/4” / 200 lb 1524mm x 762mm x 1949mm / 90.7 kg	Quote Only
16030TRCOL-BO	Bone			Quote Only
16030TRCOL-WH	White			Quote Only

OPTIONS

SKU	Description	MSRP
SMSOAPDISH	Small soap dish shipped loose	$ 188
LGSOAPDISH	Large soap dish shipped loose	$ 264
1VAL300	Single hand chrome pressure balancing mixing valve suitable for commercial use. One-piece ceramic cartridge. Maximum temperature limit stop Installed on right wall	$ 443
1VAL300	Single hand chrome pressure balancing mixing valve suitable for commercial use. One-piece ceramic cartridge. Maximum temperature limit stop Installed on left wall	$ 443
1VAL300	Single hand chrome pressure balancing mixing valve suitable for commercial use. One-piece ceramic cartridge. Maximum temperature limit stop Installed on back wall	$ 443
1SH0107COMPLETE	Handheld shower assembly with 30 inch slide bar and 60 inch hose. Installed on right wall	$ 417
1SH0107COMPLETE	Handheld shower assembly with 30 inch slide bar and 60 inch hose. Installed on left wall	$ 417
1SH0107COMPLETE	Handheld shower assembly with 30 inch slide bar and 60 inch hose. Installed on back wall	$ 417

OPTIONS

SKU	Description	MSRP
1ROD114SS	1” diameter Stainless Steel curtain rod	$ 125
1CUR132WHT	66 inch x 72 inch white premium weighted shower curtain Shipped loose	$ 371
TRENCHMAT	Underaly ramp for trench drain shower models Quantity of (2)	$ 405
60SHFWBALL	Extra reinforcement for after market accessories installment on all walls.	$ 406
M-60WGRATE	Optional powder coated white trench grate. Unit comes standard with Stainless Steel.	$ 1041
1S2621PDL	White fold-up L-shaped cushioned seat (factory installed) Installed on Left side wall	$ 889
1S2621PDR	White fold-up L-shaped cushioned seat (factory installed) Installed on Right side wall	$ 889
1S2621PHWL	Solid fold-up phenolic seat with slats for drainage (factory installed) Installed on Left side wall Available finishes: White **(WH)**, Teak**(TK)**	$ 925
1S2621PHWR	Solid fold-up phenolic seat with slats for drainage (factory installed) Installed on Right side wall Available finishes: White **(WH)**, Teak**(TK)**	$ 925
1S2621PHR		$ 925
M-BAR113125SS	Package: Stainless steel accessible L-bar configuration (1) 20 inch and (1) 30 inch: 1-1/4 inch diameter, concealed flanges All grab bars are factory installed and not sold separately. Available finishes: Stainless Steel**(SS)**	$ 398
M-BAR113153SS	Package: Stainless steel accessible U-bar configuration (2) 20 inch and (1) 48 inch: 1-1/4 inch diameter, concealed flanges All grab bars are factory installed and not sold separately. Available finishes: Stainless Steel**(SS)**	$ 657
4200BRASDRSF	2” Brass Surefit Joint Shower Drain Brass drain material Snap in strainer-stainless steel No-caulk connection.	$ 48
1BAR109W	Stainless steel accessible 18 inch grab bar, 1-1/4 inch diameter, concealed flanges Custom location installation; drawing required. All grab bars are factory installed and not sold separately. Not all bars available on all units, consult customer care. Available finishes: Stainless Steel**(SS)**, Powder Coated White **(W)**,	$ 237
1BAR109SS		$ 186

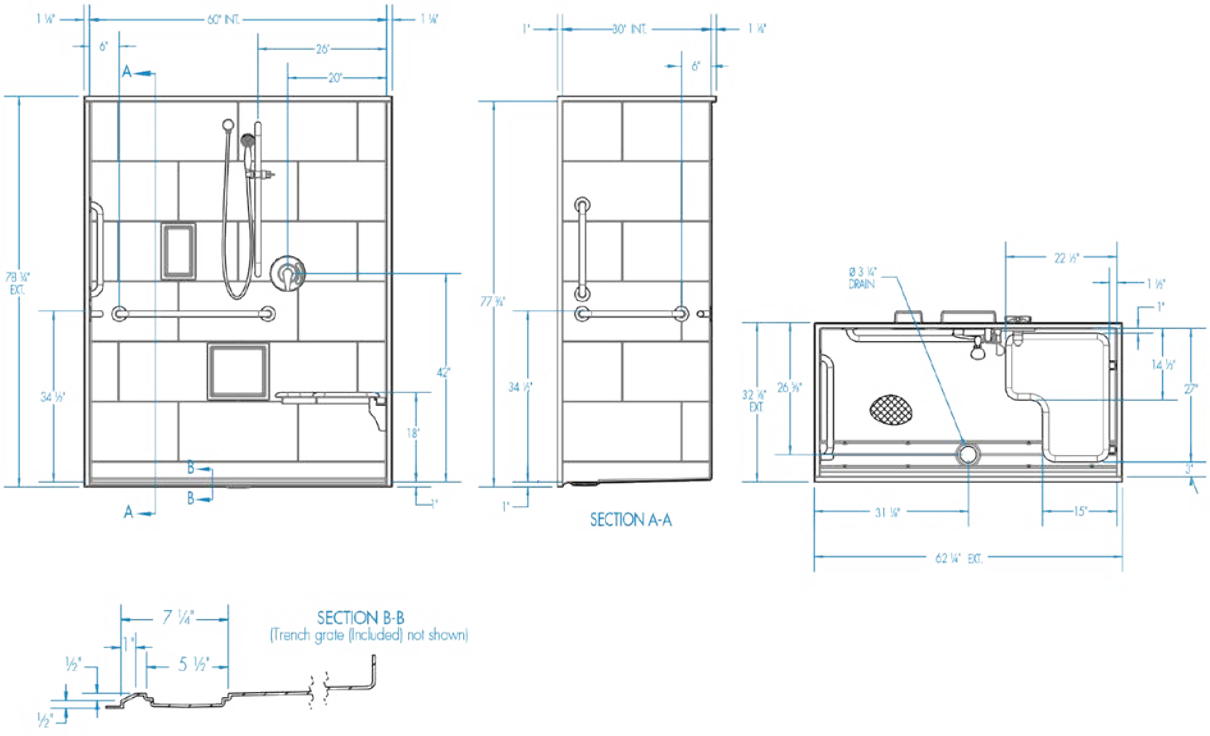
60" INT.
30" INT.
SECTION A-A
SECTION B-B
(Trench grate (Included) not shown)
Ø 3 ¼" DRAIN
62 ¼" EXT.

16034BFSBTTR





Material : AcrylX™

Features

- 1-Piece Shower
- AcrylX™ applied acrylic surface
- 1/2 Inch skirt
- 1/2 Inch change of level (COL) exterior threshold
- Slip-resistant textured floor for safety
- Barrier free when properly installed
- Smooth large 12 Inch x 24 Inch subway tile wall
- Center drain outlet
- Integral front trench drain
- Level Base
- Interior dimensions: 60 Inches x 34 Inches x 76-3/4 Inches
- Exterior dimensions: 66 Inches x 36-1/8 Inches x 78-3/4 Inches
- Stainless steel grate

16034BFSBTTR - PRICING CATEGORY : FL

SKU	Color	Configuration	Dimensions & Weight	MSRP
16034BFSBTTR-BI	Biscuit	Center Drain	60” x 34” x 76 3/4” / 200 lb 1524mm x 864mm x 1949mm / 90.7 kg	Quote Only
16034BFSBTTR-BO	Bone			Quote Only
16034BFSBTTR-WH	White			Quote Only

16034BFSBTTR - ADA COMPLIANT CONFIGURATION

SKU	Color	Configuration	Dimensions & Weight	MSRP
16034BFSBTTR-BI	Biscuit	Center Drain ADA Compliant Configuration	60” x 34” x 76 3/4” / 200 lb 1524mm x 864mm x 1949mm / 90.7 kg	Quote Only
16034BFSBTTR-BO	Bone			Quote Only
16034BFSBTTR-WH	White			Quote Only

16034BFSBTTR - ADA COMPLIANT CONFIGURATION WITHOUT SEAT

SKU	Color	Configuration	Dimensions & Weight	MSRP
16034BFSBTTR-BI	Biscuit	Center Drain ADA Compliant Configuration without Seat	60” x 34” x 76 3/4” / 200 lb 1524mm x 864mm x 1949mm / 90.7 kg	Quote Only
16034BFSBTTR-BO	Bone			Quote Only
16034BFSBTTR-WH	White			Quote Only

16034BFSBTTR - ANSI COMPLIANT CONFIGURATION

SKU	Color	Configuration	Dimensions & Weight	MSRP
16034BFSBTTR-BI	Biscuit	Center Drain ANSI Compliant Configuration	60” x 34” x 76 3/4” / 200 lb 1524mm x 864mm x 1949mm / 90.7 kg	Quote Only
16034BFSBTTR-BO	Bone			Quote Only
16034BFSBTTR-WH	White			Quote Only

16034BFSBTTR - L-BAR CONFIGURATION

SKU	Color	Configuration	Dimensions & Weight	MSRP
16034BFSBTTR-BI	Biscuit	Center Drain L-Bar Configuration	60” x 34” x 76 3/4” / 200 lb 1524mm x 864mm x 1949mm / 90.7 kg	Quote Only
16034BFSBTTR-BO	Bone			Quote Only
16034BFSBTTR-WH	White			Quote Only

16034BFSBTTR - L-BAR CONFIGURATION AND FOLDING SEAT

SKU	Color	Configuration	Dimensions & Weight	MSRP
16034BFSBTTR-WH	White	Center Drain L-Bar Configuration and Folding Seat	60” x 34” x 76 3/4” / 200 lb 1524mm x 864mm x 1949mm / 90.7 kg	Quote Only

16034BFSBTTR - U-BAR

SKU	Color	Configuration	Dimensions & Weight	MSRP
16034BFSBTTR-BI	Biscuit	Center Drain U-Bar	60” x 34” x 76 3/4” / 200 lb 1524mm x 864mm x 1949mm / 90.7 kg	Quote Only
16034BFSBTTR-BO	Bone			Quote Only
16034BFSBTTR-WH	White			Quote Only

OPTIONS

SKU	Description	MSRP
4200BRASDRSF	2” Brass Surefit Joint Shower Drain Brass drain material Snap in strainer-stainless steel No-caulk connection.	$ 48
SMSOAPDISH	Small soap dish shipped loose	$ 188
LGSOAPDISH	Large soap dish shipped loose	$ 264
1VAL300	Single hand chrome pressure balancing mixing valve suitable for commercial use. One-piece ceramic cartridge. Maximum temperature limit stop Installed on right wall	$ 443
1VAL300	Single hand chrome pressure balancing mixing valve suitable for commercial use. One-piece ceramic cartridge. Maximum temperature limit stop Installed on left wall	$ 443
1VAL300	Single hand chrome pressure balancing mixing valve suitable for commercial use. One-piece ceramic cartridge. Maximum temperature limit stop Installed on back wall	$ 443
1SH0107COMPLETE	Handheld shower assembly with 30 inch slide bar and 60 inch hose. Installed on right wall	$ 417
1SH0107COMPLETE	Handheld shower assembly with 30 inch slide bar and 60 inch hose. Installed on left wall	$ 417
1SH0107COMPLETE	Handheld shower assembly with 30 inch slide bar and 60 inch hose. Installed on back wall	$ 417

OPTIONS

SKU	Description	MSRP
1CUR132WHT	66 inch x 72 inch white premium weighted shower curtain Shipped loose	$ 371
1ROD114SS	1” diameter Stainless Steel curtain rod	$ 125
60SHFWBALL	Extra reinforcement for after market accessories installment on all walls.	$ 406
M-60WGRATE	Optional powder coated white trench grate. Unit comes standard with Stainless Steel.	$ 1041
1BAR109W	Stainless steel accessible 18 inch vertical grab bar, 1-1/4 inch diameter, concealed flanges All grab bars are factory installed and not sold separately. Available finishes: Stainless Steel**(SS)**, Powder Coated White **(W)**	$ 237
1BAR109SS		$ 186
1S3021PDL	White fold-up L-shaped cushioned seat (factory installed) Installed on Left side wall	$ 889
1S3021PDR	White fold-up L-shaped cushioned seat (factory installed) Installed on Right side wall	$ 889
1S3021PHL	Solid fold-up phenolic seat with slats for drainage (factory installed) Installed on Left side wall Available finishes: White **(WH)**, Teak**(TK)**	$ 925
1S3021PHWL		$ 925
1S3021PHR	Solid fold-up phenolic seat with slats for drainage (factory installed) Installed on Right side wall Available finishes: White **(WH)**, Teak**(TK)**	$ 925
1S3021-PHWR		$ 925
M-BAR117153SS	Package: Stainless steel accessible U-bar configuration (2) 24 inch and (1) 48 inch: 1-1/4 inch diameter, concealed flanges All grab bars are factory installed and not sold separately. Available finishes: Stainless Steel**(SS)**	$ 701
M-BAR117125SS	Package: Stainless steel accessible L-bar configuration (1) 24 inch and (1) 30 inch: 1-1/4 inch diameter, concealed flanges All grab bars are factory installed and not sold separately. Available finishes: Stainless Steel**(SS)**	$ 420
TRENCHMAT	Underaly ramp for trench drain shower models Quantity of (2)	$ 405

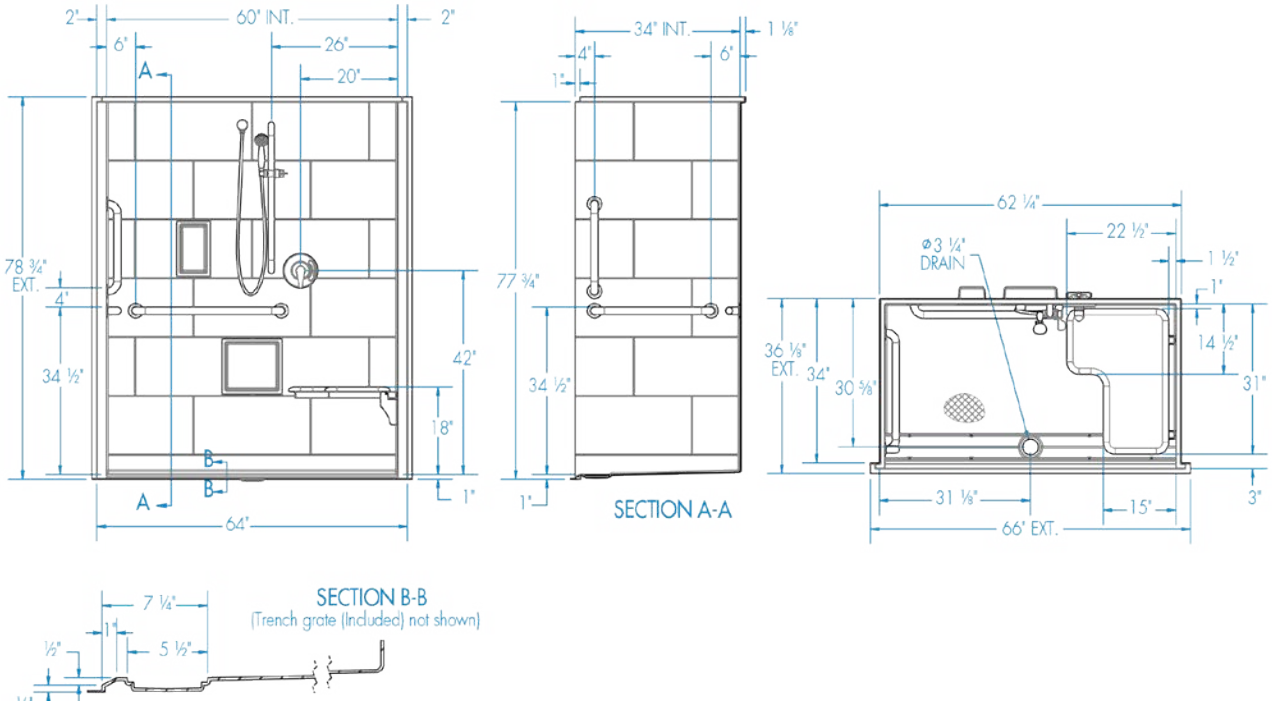
2"
60" INT.
2"
6"
26"
20"
A
78 ¾"
EXT.
4"
34 ½"
42"
18"
B
B
A
1"
64"
34" INT.
1 ⅛"
4"
6"
1"
77 ¾"
34 ½"
1"
SECTION A-A
62 ¼"
22 ½"
ø3 ¼"
DRAIN
1 ½"
1"
14 ½"
36 ⅛"
EXT.
34"
30 ⅝"
31"
3"
31 ⅛"
15"
66" EXT.
7 ¼"
1"
5 ½"
½"
SECTION B-B
(Trench grate (Included) not shown)

16034BFSC





Material : AcrylX™

Features

- 1-Piece Shower
- Pre-leveled base
- AcrylX™ applied acrylic surface
- 3/4 Inch skirt
- 1/2 Inch beveled threshold
- Slip-resistant textured floor for safety
- Barrier free when properly installed
- Smooth wall finish is easy to clean
- Center drain
- Interior dimensions: 60 Inches x 34-1/4 Inches x 76-1/4 Inches
- Exterior dimensions: 62 Inches x 37 Inches x 77-3/4 Inches
- Available in West Zone only

16034BFSC - PRICING CATEGORY : FL

SKU	Color	Configuration	Dimensions & Weight	MSRP
16034BFSC-AL	Almond	Center Drain	60” x 34” x 76 1/4” / 202 lb 1524mm x 864mm x 1937mm / 91.61 kg	$ 1750
16034BFSC-BI	Biscuit			$ 1750
16034BFSC-BO	Bone			$ 1750
16034BFSC-WH	White			$ 1715

16034BFSC - ADA COMPLIANT CONFIGURATION

SKU	Color	Configuration	Dimensions & Weight	MSRP
16034BFSC-AL	Almond	Center Drain ADA Compliant Configuration	60” x 34” x 76 1/4” / 202 lb 1524mm x 864mm x 1937mm / 91.61 kg	$ 3919
16034BFSC-BI	Biscuit			$ 3919
16034BFSC-BO	Bone			$ 3919
16034BFSC-WH	White			$ 3884

16034BFSC - ADA COMPLIANT CONFIGURATION WITHOUT SEAT

SKU	Color	Configuration	Dimensions & Weight	MSRP
16034BFSC-AL	Almond	Center Drain ADA Compliant Configuration without Seat	60” x 34” x 76 1/4” / 202 lb 1524mm x 864mm x 1937mm / 91.61 kg	$ 3311
16034BFSC-BI	Biscuit			$ 3311
16034BFSC-BO	Bone			$ 3311
16034BFSC-WH	White			$ 3276

16034BFSC - ANSI COMPLIANT CONFIGURATION

SKU	Color	Configuration	Dimensions & Weight	MSRP
16034BFSC-AL	Almond	Center Drain ANSI Compliant Configuration	60” x 34” x 76 1/4” / 202 lb 1524mm x 864mm x 1937mm / 91.61 kg	$ 4105
16034BFSC-BI	Biscuit			$ 4105
16034BFSC-BO	Bone			$ 4105
16034BFSC-WH	White			$ 4070

16034BFSC - L-BAR CONFIGURATION

SKU	Color	Configuration	Dimensions & Weight	MSRP
16034BFSC-AL	Almond	Center Drain L-Bar Configuration	60” x 34” x 76 1/4” / 202 lb 1524mm x 864mm x 1937mm / 91.61 kg	$ 2170
16034BFSC-BI	Biscuit			$ 2170
16034BFSC-BO	Bone			$ 2170
16034BFSC-WH	White			$ 2135

16034BFSC - L-BAR CONFIGURATION AND FOLDING SEAT

SKU	Color	Configuration	Dimensions & Weight	MSRP
16034BFSC-AL	Almond	Center Drain L-Bar Configuration and Folding Seat	60” x 34” x 76 1/4” / 202 lb 1524mm x 864mm x 1937mm / 91.61 kg	$ 3059
16034BFSC-BI	Biscuit			$ 3059
16034BFSC-BO	Bone			$ 3059
16034BFSC-WH	White			$ 3024

16034BFSC - U-BAR

SKU	Color	Configuration	Dimensions & Weight	MSRP
16034BFSC-AL	Almond	Center Drain U-Bar	60” x 34” x 76 1/4” / 202 lb 1524mm x 864mm x 1937mm / 91.61 kg	$ 2451
16034BFSC-BI	Biscuit			$ 2451
16034BFSC-BO	Bone			$ 2451
16034BFSC-WH	White			$ 2416

OPTIONS

SKU	Description	MSRP
4200BRASDRSF	2” Brass Surefit Joint Shower Drain Brass drain material Snap in strainer-stainless steel No-caulk connection.	$ 48
7175DISH	Stainless steel soap dish	$ 119
1VAL300	Single hand chrome pressure balancing mixing valve suitable for commercial use. One-piece ceramic cartridge. Maximum temperature limit stop Installed on right wall	$ 443
1VAL300	Single hand chrome pressure balancing mixing valve suitable for commercial use. One-piece ceramic cartridge. Maximum temperature limit stop Installed on left wall	$ 443
1VAL300	Single hand chrome pressure balancing mixing valve suitable for commercial use. One-piece ceramic cartridge. Maximum temperature limit stop Installed on back wall	$ 443

OPTIONS

SKU	Description	MSRP
VINYLDAM	Vinyl dam for barrier free showers. Ideal for water containment.	$ 125
1SH0107COMPLETE	Handheld shower assembly with 30 inch slide bar and 60 inch hose. Installed on right wall	$ 417
1SH0107COMPLETE	Handheld shower assembly with 30 inch slide bar and 60 inch hose. Installed on left wall	$ 417
1SH0107COMPLETE	Handheld shower assembly with 30 inch slide bar and 60 inch hose. Installed on back wall	$ 417
S72360ROD	1” diameter Stainless Steel curtain rod for 60” model	$ 101
60CURTAIN	Curtain for 60” model Shipped loose	$ 156
35RKBO	Finish repair kit - Case of 12 Available in White **(WH)**, or Bone **(BO)**,	$ 303
35RKWH		$ 303
1BAR109W	Stainless steel accessible 18 inch vertical grab bar, 1-1/4 inch diameter, concealed flanges All grab bars are factory installed and not sold separately. Available finishes: Stainless Steel**(SS)**, Powder Coated White **(W)**	$ 237
1BAR109SS		$ 186
S7160UGRAB	Package: Stainless steel accessible U-bar configuration (2) 24 inch and (1) 48 inch: 1-1/4 inch diameter, concealed flanges All grab bars are factory installed and not sold separately. Available finishes: Stainless Steel**(SS)**	$ 701
S1603GBARST	Package: Stainless steel accessible L-bar configuration (1) 24 inch and (1) 30 inch: 1-1/4 inch diameter, concealed flanges All grab bars are factory installed and not sold separately. Available finishes: Stainless Steel**(SS)**	$ 420
S7030LCUSHL	White fold-up L-shaped cushioned seat (factory installed) Installed on Left side wall	$ 889
S7030LCUSHR	White fold-up L-shaped cushioned seat (factory installed) Installed on Right side wall	$ 889
S7030PHENL	Rectgangular fold-up phenolic seat (factory installed) Installed on Left side wall Available finishes: White **(WH)**, Teak**(TK)**	$ 925
S7030PHENWL		$ 925
S7030PHENWR	Rectgangular fold-up phenolic seat (factory installed) Installed on Right side wall Available finishes: White **(WH)**, Teak**(TK)**	$ 925
S7030PHENR		$ 925

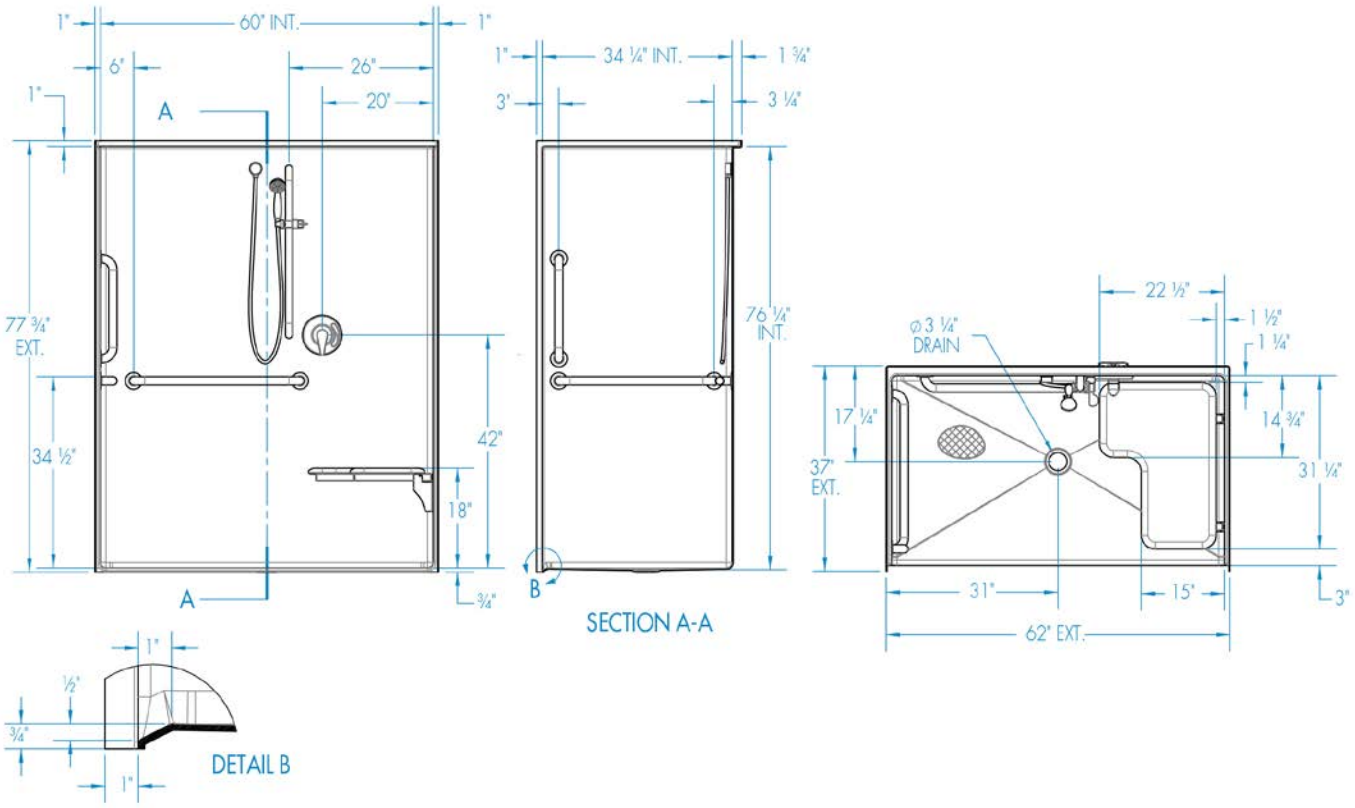
1"
60" INT.
1"
6"
26"
20"
1"
A
77 ¾"
EXT.
34 ½"
42"
18"
¾"
A
1"
34 ¼" INT.
1 ¾"
3"
3 ¼"
76 ¼"
INT.
B
SECTION A-A
22 ½"
1 ½"
1 ¼"
Ø 3 ¼"
DRAIN
17 ¼"
37"
EXT.
14 ¾"
31 ¼"
31"
15"
3"
62" EXT.
1"
½"
¾"
1"
DETAIL B

16034BFSCTTR





Material : AcrylX™

Features

- 1-Piece Shower
- AcrylX™ applied acrylic surface
- 1-1⁄8 Inch skirt
- Barrier free when properly installed
- Smooth large 12 Inch x 24 Inch subway tile wall
- Center front drain outlet
- Integral front trench drain
- Level Base
- Slip-resistant textured floor for safety
- Interior dimensions: 60 Inches x 34 Inches x 76-3/4 Inches
- Exterior dimensions: 66 Inches x 36-18 Inches x 78-3/4 Inches
- Stainless steel grate

16034BFSCTTR - PRICING CATEGORY : FL

SKU	Color	Configuration	Dimensions & Weight	MSRP
16034BFSCTTR-BI	Biscuit	Center Drain	60” x 34” x 76 3/4” / 200 lb 1524mm x 864mm x 1949mm / 90.7 kg	Quote Only
16034BFSCTTR-BO	Bone			Quote Only
16034BFSCTTR-WH	White			Quote Only

16034BFSCTTR - ADA COMPLIANT CONFIGURATION

SKU	Color	Configuration	Dimensions & Weight	MSRP
16034BFSCTTR-BI	Biscuit	Center Drain ADA Compliant Configuration	60” x 34” x 76 3/4” / 200 lb 1524mm x 864mm x 1949mm / 90.7 kg	Quote Only
16034BFSCTTR-BO	Bone			Quote Only
16034BFSCTTR-WH	White			Quote Only

16034BFSCTTR - ADA COMPLIANT CONFIGURATION WITHOUT SEAT

SKU	Color	Configuration	Dimensions & Weight	MSRP
16034BFSCTTR-BI	Biscuit	Center Drain ADA Compliant Configuration without Seat	60” x 34” x 76 3/4” / 200 lb 1524mm x 864mm x 1949mm / 90.7 kg	Quote Only
16034BFSCTTR-BO	Bone			Quote Only
16034BFSCTTR-WH	White			Quote Only

16034BFSCTTR - ANSI COMPLIANT CONFIGURATION

SKU	Color	Configuration	Dimensions & Weight	MSRP
16034BFSCTTR-BI	Biscuit	Center Drain ANSI Compliant Configuration	60” x 34” x 76 3/4” / 200 lb 1524mm x 864mm x 1949mm / 90.7 kg	Quote Only
16034BFSCTTR-BO	Bone			Quote Only
16034BFSCTTR-WH	White			Quote Only

16034BFSCTTR - L-BAR CONFIGURATION

SKU	Color	Configuration	Dimensions & Weight	MSRP
16034BFSCTTR-BI	Biscuit	Center Drain L-Bar Configuration	60” x 34” x 76 3/4” / 200 lb 1524mm x 864mm x 1949mm / 90.7 kg	Quote Only
16034BFSCTTR-BO	Bone			Quote Only
16034BFSCTTR-WH	White			Quote Only

16034BFSCTTR - L-BAR CONFIGURATION AND FOLDING SEAT

SKU	Color	Configuration	Dimensions & Weight	MSRP
16034BFSCTTR-WH	Bone	Center Drain L-Bar Configuration and Folding Seat	60” x 34” x 76 3/4” / 200 lb 1524mm x 864mm x 1949mm / 90.7 kg	Quote Only

16034BFSCTTR - U-BAR

SKU	Color	Configuration	Dimensions & Weight	MSRP
16034BFSCTTR-BI	Biscuit	Center Drain U-Bar	60” x 34” x 76 3/4” / 200 lb 1524mm x 864mm x 1949mm / 90.7 kg	Quote Only
16034BFSCTTR-BO	Bone			Quote Only
16034BFSCTTR-WH	White			Quote Only

OPTIONS

SKU	Description	MSRP
4200BRASDRSF	2” Brass Surefit Joint Shower Drain Brass drain material Snap in strainer-stainless steel No-caulk connection.	$ 48
SMSOAPDISH	Small soap dish shipped loose	$ 188
LGSOAPDISH	Large soap dish shipped loose	$ 264
1VAL300	Single hand chrome pressure balancing mixing valve suitable for commercial use. One-piece ceramic cartridge. Maximum temperature limit stop Installed on right wall	$ 443
1VAL300	Single hand chrome pressure balancing mixing valve suitable for commercial use. One-piece ceramic cartridge. Maximum temperature limit stop Installed on left wall	$ 443
1VAL300	Single hand chrome pressure balancing mixing valve suitable for commercial use. One-piece ceramic cartridge. Maximum temperature limit stop Installed on back wall	$ 443
1SH0107COMPLETE	Handheld shower assembly with 30 inch slide bar and 60 inch hose. Installed on right wall	$ 417
1SH0107COMPLETE	Handheld shower assembly with 30 inch slide bar and 60 inch hose. Installed on left wall	$ 417
1SH0107COMPLETE	Handheld shower assembly with 30 inch slide bar and 60 inch hose. Installed on back wall	$ 417

OPTIONS

SKU	Description	MSRP
TRENCHMAT	Underaly ramp for trench drain shower models Quantity of (2)	$ 405
60SHFWBALL	Extra reinforcement for after market accessories installment on all walls.	$ 406
M-60WGRATE	Optional powder coated white trench grate. Unit comes standard with Stainless Steel.	$ 1041
1BAR109W	Stainless steel accessible 18 inch vertical grab bar, 1-1/4 inch diameter, concealed flanges All grab bars are factory installed and not sold separately. Available finishes: Stainless Steel**(SS)**, Powder Coated White **(W)**	$ 237
1BAR109SS		$ 186
1S3021PDL	White fold-up L-shaped cushioned seat (factory installed) Installed on Left side wall	$ 889
1S3021PDR	White fold-up L-shaped cushioned seat (factory installed) Installed on Right side wall	$ 889
1S3021PHL	Solid fold-up phenolic seat with slats for drainage (factory installed) Installed on Left side wall Available finishes: White **(WH)**, Teak**(TK)**	$ 925
1S3021PHWL		$ 925
1S3021PHR	Solid fold-up phenolic seat with slats for drainage (factory installed) Installed on Right side wall Available finishes: White **(WH)**, Teak**(TK)**	$ 925
1S3021-PHWR		$ 925
M-BAR117153SS	Package: Stainless steel accessible U-bar configuration (2) 24 inch and (1) 48 inch: 1-1/4 inch diameter, concealed flanges All grab bars are factory installed and not sold separately. Available finishes: Stainless Steel**(SS)**	$ 701
M-BAR117125SS	Package: Stainless steel accessible L-bar configuration (1) 24 inch and (1) 30 inch: 1-1/4 inch diameter, concealed flanges All grab bars are factory installed and not sold separately. Available finishes: Stainless Steel**(SS)**	$ 420
1CUR132WHT	66 inch x 72 inch white premium weighted shower curtain Shipped loose	$ 371
1ROD114SS	1” diameter Stainless Steel curtain rod	$ 125

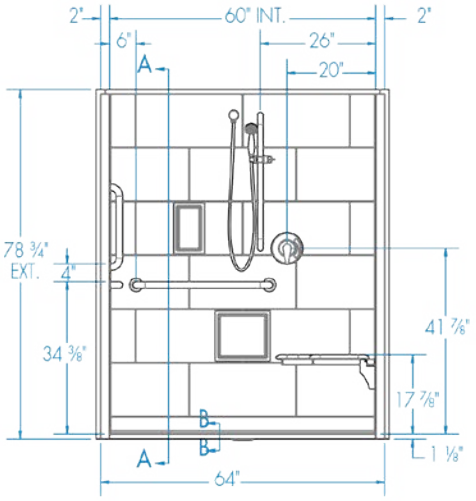
2"
60" INT.
2"
6"
26"
20"
A
78 ¾"
EXT.
4"
34 ⅜"
41 ⅞"
17 ⅞"
1 ⅛"
B
B
A
64"

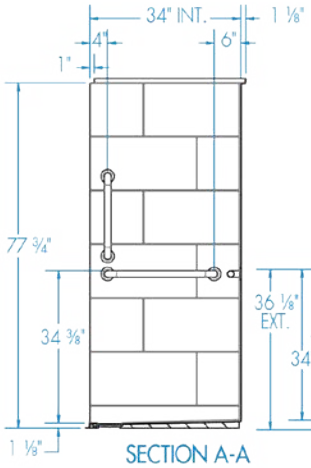
34" INT.
1 ⅛"
4"
6"
1"
77 ¾"
34 ⅜"
1 ⅛"
SECTION A-A

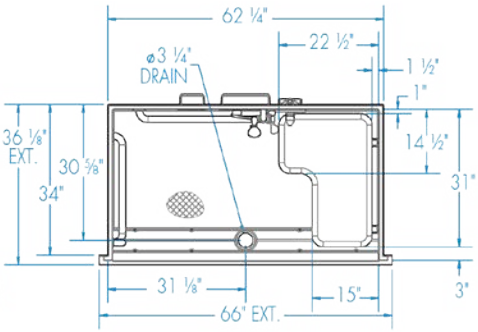
62 ¼"
22 ½"
1 ½"
1"
ø3 ¼"
DRAIN
14 ½"
36 ⅛"
EXT.
30 ⅝"
34"
31"
31 ⅛"
15"
3"
66" EXT.

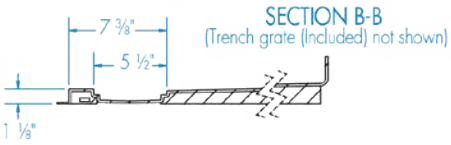
7 ⅜"
5 ½"
SECTION B-B
(Trench grate (Included) not shown)
1 ⅛"

16034TRCOL





Material : AcrylX™

Features

- 1-Piece Shower stall
- AcrylX™ applied acrylic surface
- 1 COL Inch skirt
- Barrier free when properly installed
- Smooth large 12 Inch x 24 Inch subway tile wall
- Center front drain outlet
- Integral front trench drain
- Level Base
- Slip-resistant textured floor for safety
- Interior dimensions: 60 Inches x 34 Inches x 76-3/4 Inches
- Exterior dimensions: 62-1/4 Inches x 36-1/8 Inches x 78-3/4 Inches
- Stainless steel Tamper-proof grate

16034TRCOL - PRICING CATEGORY : FL

SKU	Color	Configuration	Dimensions & Weight	MSRP
16034TRCOL-BI	Biscuit	Center Drain	60” x 34” x 78 3/4” / 200 lb 1524mm x 864mm x 2000mm / 90.7 kg	Quote Only
16034TRCOL-BO	Bone			Quote Only
16034TRCOL-WH	White			Quote Only

16034TRCOL - ADA COMPLIANT CONFIGURATION

SKU	Color	Configuration	Dimensions & Weight	MSRP
16034TRCOL-BI	Biscuit	Center Drain ADA Compliant Configuration	60” x 34” x 78 3/4” / 200 lb 1524mm x 864mm x 2000mm / 90.7 kg	Quote Only
16034TRCOL-BO	Bone			Quote Only
16034TRCOL-WH	White			Quote Only

16034TRCOL - ADA COMPLIANT CONFIGURATION WITHOUT SEAT

SKU	Color	Configuration	Dimensions & Weight	MSRP
16034TRCOL-BI	Biscuit	Center Drain ADA Compliant Configuration without Seat	60” x 34” x 78 3/4” / 200 lb 1524mm x 864mm x 2000mm / 90.7 kg	Quote Only
16034TRCOL-BO	Bone			Quote Only
16034TRCOL-WH	White			Quote Only

16034TRCOL - ANSI COMPLIANT CONFIGURATION

SKU	Color	Configuration	Dimensions & Weight	MSRP
16034TRCOL-BI	Biscuit	Center Drain ANSI Compliant Configuration	60” x 34” x 78 3/4” / 200 lb 1524mm x 864mm x 2000mm / 90.7 kg	Quote Only
16034TRCOL-BO	Bone			Quote Only
16034TRCOL-WH	White			Quote Only

16034TRCOL - L-BAR CONFIGURATION

SKU	Color	Configuration	Dimensions & Weight	MSRP
16034TRCOL-BI	Biscuit	Center Drain L-Bar Configuration	60” x 34” x 78 3/4” / 200 lb 1524mm x 864mm x 2000mm / 90.7 kg	Quote Only
16034TRCOL-BO	Bone			Quote Only
16034TRCOL-WH	White			Quote Only

16034TRCOL - L-BAR CONFIGURATION AND FOLDING SEAT

SKU	Color	Configuration	Dimensions & Weight	MSRP
16034TRCOL-BI	Biscuit	Center Drain L-Bar Configuration and Folding Seat	60” x 34” x 78 3/4” / 200 lb 1524mm x 864mm x 2000mm / 90.7 kg	Quote Only
16034TRCOL-BO	Bone			Quote Only
16034TRCOL-WH	White			Quote Only

16034TRCOL - U-BAR

SKU	Color	Configuration	Dimensions & Weight	MSRP
16034TRCOL-BI	Biscuit	Center Drain U-Bar	60” x 34” x 78 3/4” / 200 lb 1524mm x 864mm x 2000mm / 90.7 kg	Quote Only
16034TRCOL-BO	Bone			Quote Only
16034TRCOL-WH	White			Quote Only

OPTIONS

SKU	Description	MSRP
LGSOAPDISH	Large soap dish shipped loose	$ 264
SMSOAPDISH	Small soap dish shipped loose	$ 188
1VAL300	Single hand chrome pressure balancing mixing valve suitable for commercial use. One-piece ceramic cartridge. Maximum temperature limit stop Installed on right wall	$ 443
1VAL300	Single hand chrome pressure balancing mixing valve suitable for commercial use. One-piece ceramic cartridge. Maximum temperature limit stop Installed on left wall	$ 443
1VAL300	Single hand chrome pressure balancing mixing valve suitable for commercial use. One-piece ceramic cartridge. Maximum temperature limit stop Installed on back wall	$ 443
1SH0107COMPLETE	Handheld shower assembly with 30 inch slide bar and 60 inch hose. Installed on right wall	$ 417
1SH0107COMPLETE	Handheld shower assembly with 30 inch slide bar and 60 inch hose. Installed on left wall	$ 417
1SH0107COMPLETE	Handheld shower assembly with 30 inch slide bar and 60 inch hose. Installed on back wall	$ 417

OPTIONS

SKU	Description	MSRP
1CUR132WHT	66 inch x 72 inch white premium weighted shower curtain Shipped loose	$ 371
1ROD114SS	1” diameter Stainless Steel curtain rod	$ 125
60SHFWBALL	Extra reinforcement for after market accessories installment on all walls.	$ 406
M-60WGRATE	Optional powder coated white trench grate. Unit comes standard with Stainless Steel.	$ 1041
1BAR109W	Stainless steel accessible 18 inch vertical grab bar, 1-1/4 inch diameter, concealed flanges All grab bars are factory installed and not sold separately. Available finishes: Stainless Steel**(SS)**, Powder Coated White **(W)**	$ 237
1BAR109SS		$ 186
1S3021PDL	White fold-up L-shaped cushioned seat (factory installed) Installed on Left side wall	$ 889
1S3021PDR	White fold-up L-shaped cushioned seat (factory installed) Installed on Right side wall	$ 889
1S3021PHL	Solid fold-up phenolic seat with slats for drainage (factory installed) Installed on Left side wall Available finishes: White **(WH)**, Teak**(TK)**	$ 925
1S3021PHWL		$ 925
1S3021PHR	Solid fold-up phenolic seat with slats for drainage (factory installed) Installed on Right side wall Available finishes: White **(WH)**, Teak**(TK)**	$ 925
1S3021-PHWR		$ 925
M-BAR117153SS	Package: Stainless steel accessible U-bar configuration (2) 24 inch and (1) 48 inch: 1-1/4 inch diameter, concealed flanges All grab bars are factory installed and not sold separately. Available finishes: Stainless Steel**(SS)**	$ 701
M-BAR117125SS	Package: Stainless steel accessible L-bar configuration (1) 24 inch and (1) 30 inch: 1-1/4 inch diameter, concealed flanges All grab bars are factory installed and not sold separately. Available finishes: Stainless Steel**(SS)**	$ 420
4200BRASDRSF	2” Brass Surefit Joint Shower Drain Brass drain material Snap in strainer-stainless steel No-caulk connection.	$ 48
TRENCHMAT	Underaly ramp for trench drain shower models Quantity of (2)	$ 405

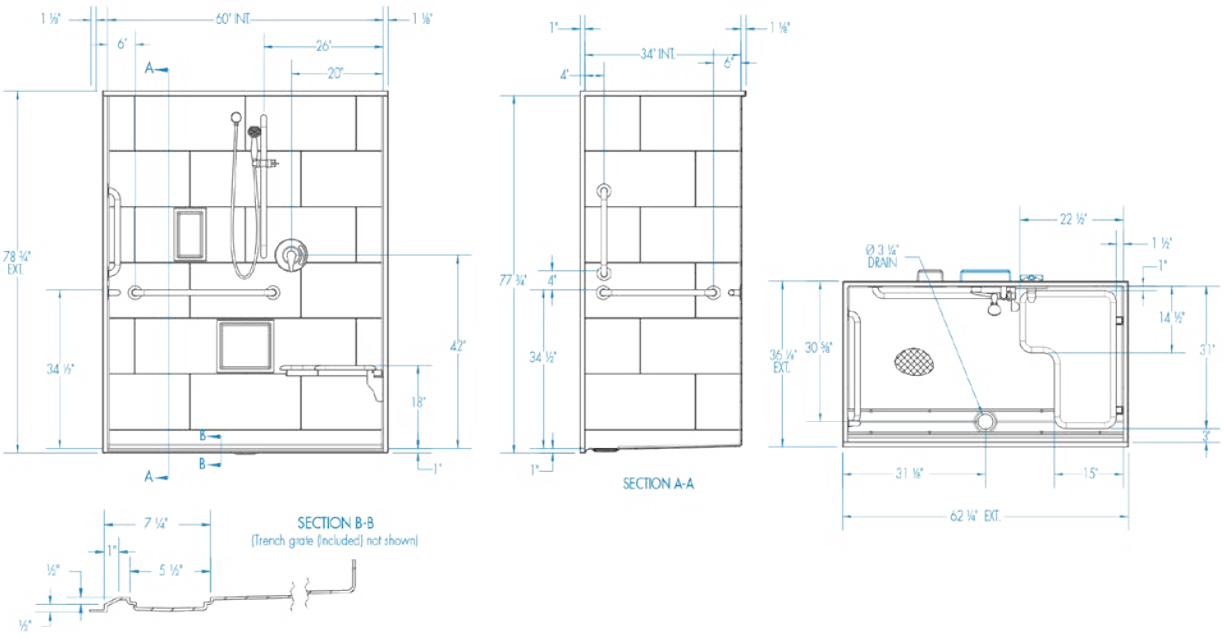
60" INT.
26"
20"
78 ¾" EXT.
34 ½"
42"
18"
SECTION A-A
SECTION B-B
(Trench grate (included) not shown)
34" INT.
77 ¾"
22 ½"
Ø 3 ¼" DRAIN
14 ½"
36 ¼" EXT.
30 ⅝"
31"
31 ⅛"
15"
62 ¼" EXT.

16036BFLP





Material : AcrylX™

Features

- 1-Piece Shower
- Available in the Pacific Northwest only
- Pre-leveled base
- Slip-resistant textured floor for safety
- AcrylX™ applied acrylic surface
- 1-1/4 Inch skirt
- Barrier free when properly installed
- Smooth wall is easy to clean
- Center drain

16036BFLP - PRICING CATEGORY : FL

SKU	Color	Configuration	Dimensions & Weight	MSRP
16036BFLP-AL	Almond	Center Drain	57” x 31” x 75 3/4” / 202 lb 1448mm x 787mm x 1924mm / 91.61 kg	$ 1820
16036BFLP-BI	Biscuit			$ 1820
16036BFLP-BO	Bone			$ 1820
16036BFLP-WH	White			$ 1785

16036BFLP - L-BAR CONFIGURATION

SKU	Color	Configuration	Dimensions & Weight	MSRP
16036BFLP-AL	Almond	Center Drain L-Bar Configuration	57” x 31” x 75 3/4” / 202 lb 1448mm x 787mm x 1924mm / 91.61 kg	$ 2240
16036BFLP-BI	Biscuit			$ 2240
16036BFLP-BO	Bone			$ 2240
16036BFLP-WH	White			$ 2205

16036BFLP - L-BAR CONFIGURATION AND FOLDING SEAT

SKU	Color	Configuration	Dimensions & Weight	MSRP
16036BFLP-AL	Almond	Center Drain L-Bar Configuration and Folding Seat	57” x 31” x 75 3/4” / 202 lb 1448mm x 787mm x 1924mm / 91.61 kg	$ 3129
16036BFLP-BI	Biscuit			$ 3129
16036BFLP-BO	Bone			$ 3129
16036BFLP-WH	White			$ 3094

16036BFLP - U-BAR

SKU	Color	Configuration	Dimensions & Weight	MSRP
16036BFLP-AL	Almond	Center Drain U-Bar	57” x 31” x 75 3/4” / 202 lb 1448mm x 787mm x 1924mm / 91.61 kg	$ 2521
16036BFLP-BI	Biscuit			$ 2521
16036BFLP-BO	Bone			$ 2521
16036BFLP-WH	White			$ 2486

OPTIONS

SKU	Description	MSRP
4200BRASDRSF	2” Brass Surefit Joint Shower Drain Brass drain material Snap in strainer-stainless steel No-caulk connection.	$ 48
7175DISH	Stainless steel soap dish	$ 119
1VAL300	Single hand chrome pressure balancing mixing valve suitable for commercial use. One-piece ceramic cartridge. Maximum temperature limit stop Installed on right wall	$ 443
1VAL300	Single hand chrome pressure balancing mixing valve suitable for commercial use. One-piece ceramic cartridge. Maximum temperature limit stop Installed on left wall	$ 443
1VAL300	Single hand chrome pressure balancing mixing valve suitable for commercial use. One-piece ceramic cartridge. Maximum temperature limit stop Installed on back wall	$ 443
1SH0107COMPLETE	Handheld shower assembly with 30 inch slide bar and 60 inch hose. Installed on right wall	$ 417
1SH0107COMPLETE	Handheld shower assembly with 30 inch slide bar and 60 inch hose. Installed on left wall	$ 417
1SH0107COMPLETE	Handheld shower assembly with 30 inch slide bar and 60 inch hose. Installed on back wall	$ 417
S72360ROD	1” diameter Stainless Steel curtain rod for 60” model	$ 101
60CURTAIN	Curtain for 60” model Shipped loose	$ 156
35RKBO	Finish repair kit - Case of 12 Available in White **(WH)**, or Bone **(BO)**,	$ 303
35RKWH		$ 303
1BAR109W	Stainless steel accessible 18 inch vertical grab bar, 1-1/4 inch diameter, concealed flanges All grab bars are factory installed and not sold separately. Available finishes: Stainless Steel**(SS)**, Powder Coated White **(W)**	$ 237
1BAR109SS		$ 186
S7160UGRAB	Package: Stainless steel accessible U-bar configuration (2) 24 inch and (1) 48 inch: 1-1/4 inch diameter, concealed flanges All grab bars are factory installed and not sold separately. Available finishes: Stainless Steel**(SS)**	$ 701
S1603GBARST	Package: Stainless steel accessible L-bar configuration (1) 24 inch and (1) 30 inch: 1-1/4 inch diameter, concealed flanges All grab bars are factory installed and not sold separately. Available finishes: Stainless Steel**(SS)**	$ 420
S7030LCUSHL	White fold-up L-shaped cushioned seat (factory installed) Installed on Left side wall	$ 889
S7030LCUSHR	White fold-up L-shaped cushioned seat (factory installed) Installed on Right side wall	$ 889
S7030PHENL	Rectgangular fold-up phenolic seat (factory installed) Installed on Left side wall Available finishes: White **(WH)**, Teak**(TK)**	$ 925
S7030PHENWL		$ 925
S7030PHENWR	Rectgangular fold-up phenolic seat (factory installed) Installed on Right side wall Available finishes: White **(WH)**, Teak**(TK)**	$ 925

OPTIONS

SKU	Description	MSRP
S7030PHENR	Rectgangular fold-up phenolic seat (factory installed) Installed on Right side wall Available finishes: White **(WH)**, Teak**(TK)**	$ 925

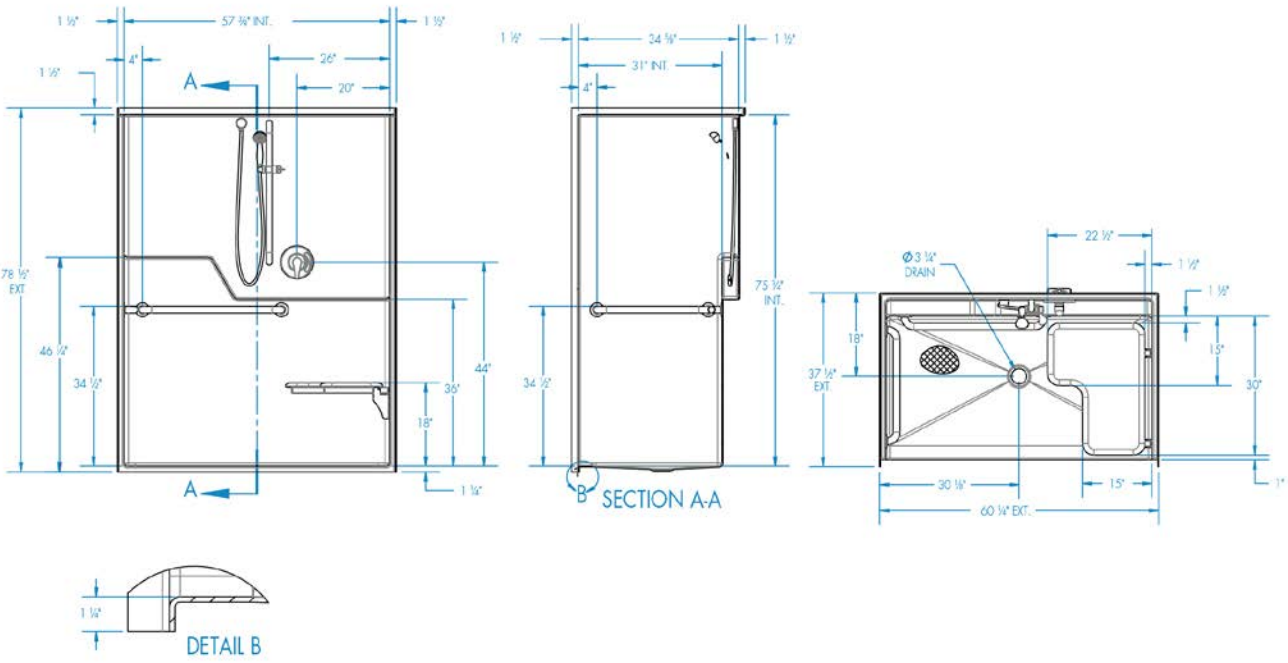
1 ½"
57 ¾" INT.
1 ½"
4"
26"
20"
A
78 ½" EXT.
46 ¼"
34 ½"
36"
44"
18"
1 ¼"
A
1 ½"
34 ⅛"
1 ½"
31" INT.
4"
75 ½" INT.
34 ½"
B
SECTION A-A
22 ½"
Ø 3 ¼" DRAIN
1 ½"
1 ½"
18"
37 ½" EXT.
15"
30"
30 ⅛"
15"
60 ¼" EXT.
1"
1 ¼"
DETAIL B

16036BFSBTTR





Material : AcrylX™

Features

- 1-Piece Shower stall
- Pre-leveled base
- AcrylX™ applied acrylic surface
- 1/2 Inch skirt
- 1/2 Inch change of level (COL) exterior threshold
- Slip-resistant textured floor for safety
- Barrier free when properly installed
- Smooth large 12 Inch x 24 Inch subway tile wall
- Center drain outlet
- Integral front trench drain
- Level base
- Interior dimensions: 60 Inches x 36 Inches x 76-3/4 Inches
- Exterior dimensions: 66 Inches x 38-1/8 Inches x 78-3/4 Inches
- Stainless steel grate

16036BFSBTTR - PRICING CATEGORY : FL

SKU	Color	Configuration	Dimensions & Weight	MSRP
16036BFSBTTR-BI	Biscuit	Center Drain	60” x 36” x 76 3/4” / 200 lb 1524mm x 914mm x 1949mm / 90.7 kg	Quote Only
16036BFSBTTR-BO	Bone			Quote Only
16036BFSBTTR-WH	White			Quote Only

16036BFSBTTR - ADA COMPLIANT CONFIGURATION

SKU	Color	Configuration	Dimensions & Weight	MSRP
16036BFSBTTR-BI	Biscuit	Center Drain ADA Compliant Configuration	60” x 36” x 76 3/4” / 200 lb 1524mm x 914mm x 1949mm / 90.7 kg	Quote Only
16036BFSBTTR-BO	Bone			Quote Only
16036BFSBTTR-WH	White			Quote Only

16036BFSBTTR - ADA COMPLIANT CONFIGURATION WITHOUT SEAT

SKU	Color	Configuration	Dimensions & Weight	MSRP
16036BFSBTTR-BI	Biscuit	Center Drain ADA Compliant Configuration without Seat	60” x 36” x 76 3/4” / 200 lb 1524mm x 914mm x 1949mm / 90.7 kg	Quote Only
16036BFSBTTR-BO	Bone			Quote Only
16036BFSBTTR-WH	White			Quote Only

16036BFSBTTR - ANSI COMPLIANT CONFIGURATION

SKU	Color	Configuration	Dimensions & Weight	MSRP
16036BFSBTTR-BI	Biscuit	Center Drain ANSI Compliant Configuration	60” x 36” x 76 3/4” / 200 lb 1524mm x 914mm x 1949mm / 90.7 kg	Quote Only
16036BFSBTTR-BO	Bone			Quote Only
16036BFSBTTR-WH	White			Quote Only

16036BFSBTTR - L-BAR CONFIGURATION

SKU	Color	Configuration	Dimensions & Weight	MSRP
16036BFSBTTR-BI	Biscuit	Center Drain L-Bar Configuration	60” x 36” x 76 3/4” / 200 lb 1524mm x 914mm x 1949mm / 90.7 kg	Quote Only
16036BFSBTTR-BO	Bone			Quote Only
16036BFSBTTR-WH	White			Quote Only

16036BFSBTTR - L-BAR CONFIGURATION AND FOLDING SEAT

SKU	Color	Configuration	Dimensions & Weight	MSRP
16036BFSBTTR-BI	White	Center Drain L-Bar Configuration and Folding Seat	60” x 36” x 76 3/4” / 200 lb 1524mm x 914mm x 1949mm / 90.7 kg	Quote Only

16036BFSBTTR - U-BAR

SKU	Color	Configuration	Dimensions & Weight	MSRP
16036BFSBTTR-BI	Biscuit	Center Drain U-Bar	60” x 36” x 76 3/4” / 200 lb 1524mm x 914mm x 1949mm / 90.7 kg	Quote Only
16036BFSBTTR-BO	Bone			Quote Only
16036BFSBTTR-WH	White			Quote Only

OPTIONS

SKU	Description	MSRP
4200BRASDRSF	2” Brass Surefit Joint Shower Drain Brass drain material Snap in strainer-stainless steel No-caulk connection.	$ 48
1S3221PDL	White fold-up L-shaped cushioned seat (factory installed) Installed on Left side wall	$ 889
1S3221PDR	White fold-up L-shaped cushioned seat (factory installed) Installed on Right side wall	$ 889
1S3221PHWL	Solid fold-up phenolic seat with slats for drainage (factory installed) Installed on Left side wall Available finishes: White **(WH)**, Teak**(TK)**,	$ 925
1S3221PHL		$ 925
1S3221PHR	Solid fold-up phenolic seat with slats for drainage (factory installed) Installed on Right side wall Available finishes: White **(WH)**, Teak**(TK)**,	$ 925
1S3221PHWR		$ 925
SMSOAPDISH	Small soap dish shipped loose	$ 188
LGSOAPDISH	Large soap dish shipped loose	$ 264
1VAL300	Single hand chrome pressure balancing mixing valve suitable for commercial use. One-piece ceramic cartridge. Maximum temperature limit stop Installed on right wall	$ 443

OPTIONS

SKU	Description	MSRP
1VAL300	Single hand chrome pressure balancing mixing valve suitable for commercial use. One-piece ceramic cartridge. Maximum temperature limit stop Installed on left wall	$ 443
1VAL300	Single hand chrome pressure balancing mixing valve suitable for commercial use. One-piece ceramic cartridge. Maximum temperature limit stop Installed on back wall	$ 443
1SH0107COMPLETE	Handheld shower assembly with 30 inch slide bar and 60 inch hose. Installed on right wall	$ 417
1SH0107COMPLETE	Handheld shower assembly with 30 inch slide bar and 60 inch hose. Installed on left wall	$ 417
1SH0107COMPLETE	Handheld shower assembly with 30 inch slide bar and 60 inch hose. Installed on back wall	$ 417
TRENCHMAT	Underaly ramp for trench drain shower models Quantity of (2)	$ 405
60SHFWBALL	Extra reinforcement for after market accessories installment on all walls.	$ 406
M-60WGRATE	Optional powder coated white trench grate. Unit comes standard with Stainless Steel.	$ 1041
1BAR109W	Stainless steel accessible 18 inch vertical grab bar, 1-1/4 inch diameter, concealed flanges All grab bars are factory installed and not sold separately. Available finishes: Stainless Steel**(SS)**, Powder Coated White **(W)**	$ 237
1BAR109SS		$ 186
M-BAR125301SS	Package: Stainless steel accessible L-bar configuration (1) 28 inch and (1) 30 inch: 1-1/4 inch diameter, concealed flanges All grab bars are factory installed and not sold separately. Available finishes: Stainless Steel**(SS)**	$ 407
M-BAR153301SS	Package: Stainless steel accessible U-bar configuration (2) 28 inch and (1) 48 inch: 1-1/4 inch diameter, concealed flanges All grab bars are factory installed and not sold separately. Available finishes: Stainless Steel**(SS)**	$ 675
1CUR132WHT	66 inch x 72 inch white premium weighted shower curtain Shipped loose	$ 371
1ROD114SS	1” diameter Stainless Steel curtain rod	$ 125

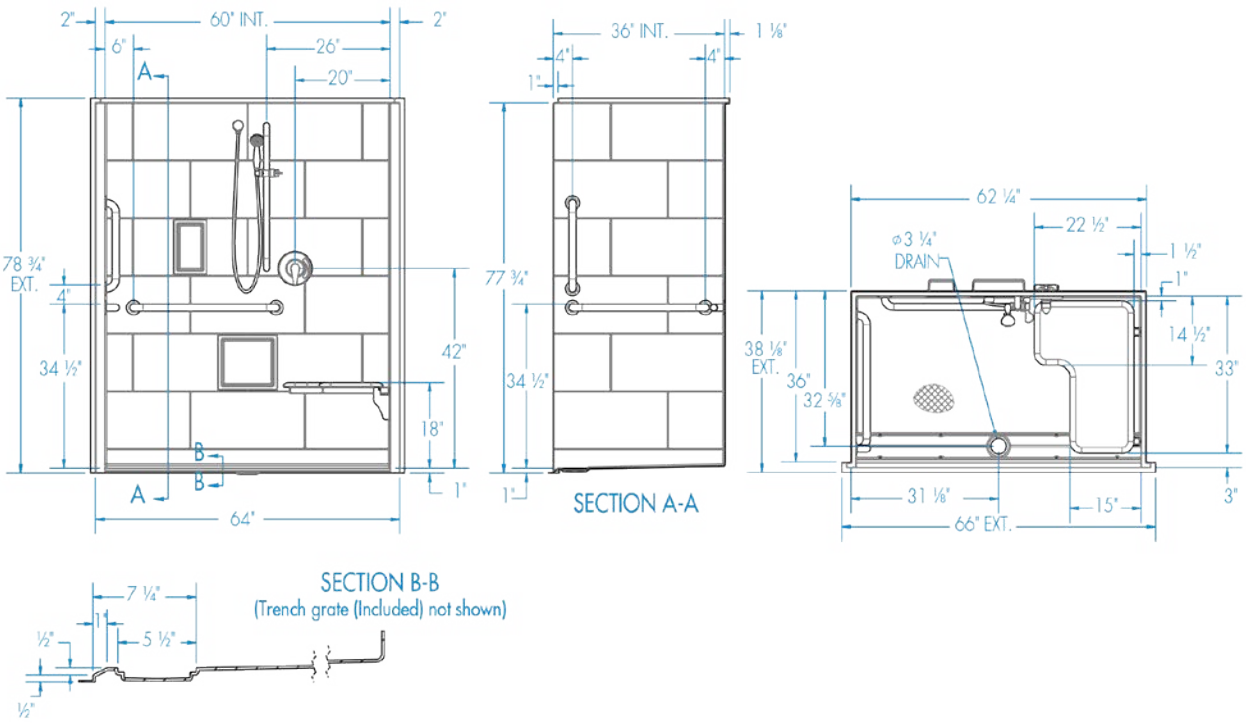
2"
60" INT.
2"
6"
26"
20"
A
78 ¾"
EXT.
4"
34 ½"
42"
18"
B
B
A
1"
64"
36" INT.
1 ⅛"
4"
4"
1"
77 ¾"
34 ½"
1"
SECTION A-A
62 ¼"
22 ½"
1 ½"
ø3 ¼"
DRAIN
1"
14 ½"
33"
38 ⅛"
EXT.
36"
32 ⅝"
31 ⅛"
15"
66" EXT.
3"

SECTION B-B
(Trench grate (Included) not shown)
7 ¼"
1"
½"
5 ½"
½"

16036BFSCTTR





Material : AcrylX™

Features

- 1-Piece Shower stall
- AcrylX™ applied acrylic surface
- 1-1⁄8 Inch skirt
- Barrier free when properly installed
- Smooth large 12 Inch x 24 Inch subway tile wall
- Center front drain outlet
- Integral front trench drain
- Level Base
- Slip-resistant textured floor for safety
- Interior dimensions: 60 Inches x 36 Inches x 76-3/4 Inches
- Exterior dimensions: 66 Inches x 38-1/8 Inches x 78-3/4 Inches
- Stainless steel Tamper-proof grate

16036BFSCTTR - PRICING CATEGORY : FL

SKU	Color	Configuration	Dimensions & Weight	MSRP
16036BFSCTTR-BI	Biscuit	Center Drain	60” x 36” x 76 3/4” / 200 lb 1524mm x 914mm x 1949mm / 90.7 kg	Quote Only
16036BFSCTTR-BO	Bone			Quote Only
16036BFSCTTR-WH	White			Quote Only

16036BFSCTTR - ADA COMPLIANT CONFIGURATION

SKU	Color	Configuration	Dimensions & Weight	MSRP
16036BFSCTTR-BI	Biscuit	Center Drain ADA Compliant Configuration	60” x 36” x 76 3/4” / 200 lb 1524mm x 914mm x 1949mm / 90.7 kg	Quote Only
16036BFSCTTR-BO	Bone			Quote Only
16036BFSCTTR-WH	White			Quote Only

16036BFSCTTR - ADA COMPLIANT CONFIGURATION WITHOUT SEAT

SKU	Color	Configuration	Dimensions & Weight	MSRP
16036BFSCTTR-BI	Biscuit	Center Drain ADA Compliant Configuration without Seat	60” x 36” x 76 3/4” / 200 lb 1524mm x 914mm x 1949mm / 90.7 kg	Quote Only
16036BFSCTTR-BO	Bone			Quote Only
16036BFSCTTR-WH	White			Quote Only

16036BFSCTTR - ANSI COMPLIANT CONFIGURATION

SKU	Color	Configuration	Dimensions & Weight	MSRP
16036BFSCTTR-BI	Biscuit	Center Drain ANSI Compliant Configuration	60” x 36” x 76 3/4” / 200 lb 1524mm x 914mm x 1949mm / 90.7 kg	Quote Only
16036BFSCTTR-BO	Bone			Quote Only
16036BFSCTTR-WH	White			Quote Only

16036BFSCTTR - L-BAR CONFIGURATION

SKU	Color	Configuration	Dimensions & Weight	MSRP
16036BFSCTTR-BI	Biscuit	Center Drain L-Bar Configuration	60” x 36” x 76 3/4” / 200 lb 1524mm x 914mm x 1949mm / 90.7 kg	Quote Only
16036BFSCTTR-BO	Bone			Quote Only
16036BFSCTTR-WH	White			Quote Only

16036BFSCTTR - L-BAR CONFIGURATION AND FOLDING SEAT

SKU	Color	Configuration	Dimensions & Weight	MSRP
16036BFSCTTR-BI	Bone	Center Drain L-Bar Configuration and Folding Seat	60” x 36” x 76 3/4” / 200 lb 1524mm x 914mm x 1949mm / 90.7 kg	Quote Only

16036BFSCTTR - U-BAR

SKU	Color	Configuration	Dimensions & Weight	MSRP
16036BFSCTTR-BI	Biscuit	Center Drain U-Bar	60” x 36” x 76 3/4” / 200 lb 1524mm x 914mm x 1949mm / 90.7 kg	Quote Only
16036BFSCTTR-BO	Bone			Quote Only
16036BFSCTTR-WH	White			Quote Only

OPTIONS

SKU	Description	MSRP
4200BRASDRSF	2” Brass Surefit Joint Shower Drain Brass drain material Snap in strainer-stainless steel No-caulk connection.	$ 48
1S3221PDL	White fold-up L-shaped cushioned seat (factory installed) Installed on Left side wall	$ 889
1S3221PDR	White fold-up L-shaped cushioned seat (factory installed) Installed on Right side wall	$ 889
1S3221PHWL	Solid fold-up phenolic seat with slats for drainage (factory installed) Installed on Left side wall Available finishes: White **(WH)**, Teak**(TK)**,	$ 925
1S3221PHL		$ 925
1S3221PHR	Solid fold-up phenolic seat with slats for drainage (factory installed) Installed on Right side wall Available finishes: White **(WH)**, Teak**(TK)**,	$ 925
1S3221PHWR		$ 925
SMSOAPDISH	Small soap dish shipped loose	$ 188
LGSOAPDISH	Large soap dish shipped loose	$ 264
1VAL300	Single hand chrome pressure balancing mixing valve suitable for commercial use. One-piece ceramic cartridge. Maximum temperature limit stop Installed on right wall	$ 443

OPTIONS

SKU	Description	MSRP
1VAL300	Single hand chrome pressure balancing mixing valve suitable for commercial use. One-piece ceramic cartridge. Maximum temperature limit stop Installed on left wall	$ 443
1VAL300	Single hand chrome pressure balancing mixing valve suitable for commercial use. One-piece ceramic cartridge. Maximum temperature limit stop Installed on back wall	$ 443
1SH0107COMPLETE	Handheld shower assembly with 30 inch slide bar and 60 inch hose. Installed on right wall	$ 417
1SH0107COMPLETE	Handheld shower assembly with 30 inch slide bar and 60 inch hose. Installed on left wall	$ 417
1SH0107COMPLETE	Handheld shower assembly with 30 inch slide bar and 60 inch hose. Installed on back wall	$ 417
60SHFWBALL	Extra reinforcement for after market accessories installment on all walls.	$ 406
M-60WGRATE	Optional powder coated white trench grate. Unit comes standard with Stainless Steel.	$ 1041
1BAR109W	Stainless steel accessible 18 inch vertical grab bar, 1-1/4 inch diameter, concealed flanges All grab bars are factory installed and not sold separately. Available finishes: Stainless Steel**(SS)**, Powder Coated White **(W)**	$ 237
1BAR109SS		$ 186
M-BAR125301SS	Package: Stainless steel accessible L-bar configuration (1) 28 inch and (1) 30 inch: 1-1/4 inch diameter, concealed flanges All grab bars are factory installed and not sold separately. Available finishes: Stainless Steel**(SS)**	$ 407
M-BAR153301SS	Package: Stainless steel accessible U-bar configuration (2) 28 inch and (1) 48 inch: 1-1/4 inch diameter, concealed flanges All grab bars are factory installed and not sold separately. Available finishes: Stainless Steel**(SS)**	$ 675
1CUR132WHT	66 inch x 72 inch white premium weighted shower curtain Shipped loose	$ 371
1ROD114SS	1” diameter Stainless Steel curtain rod	$ 125

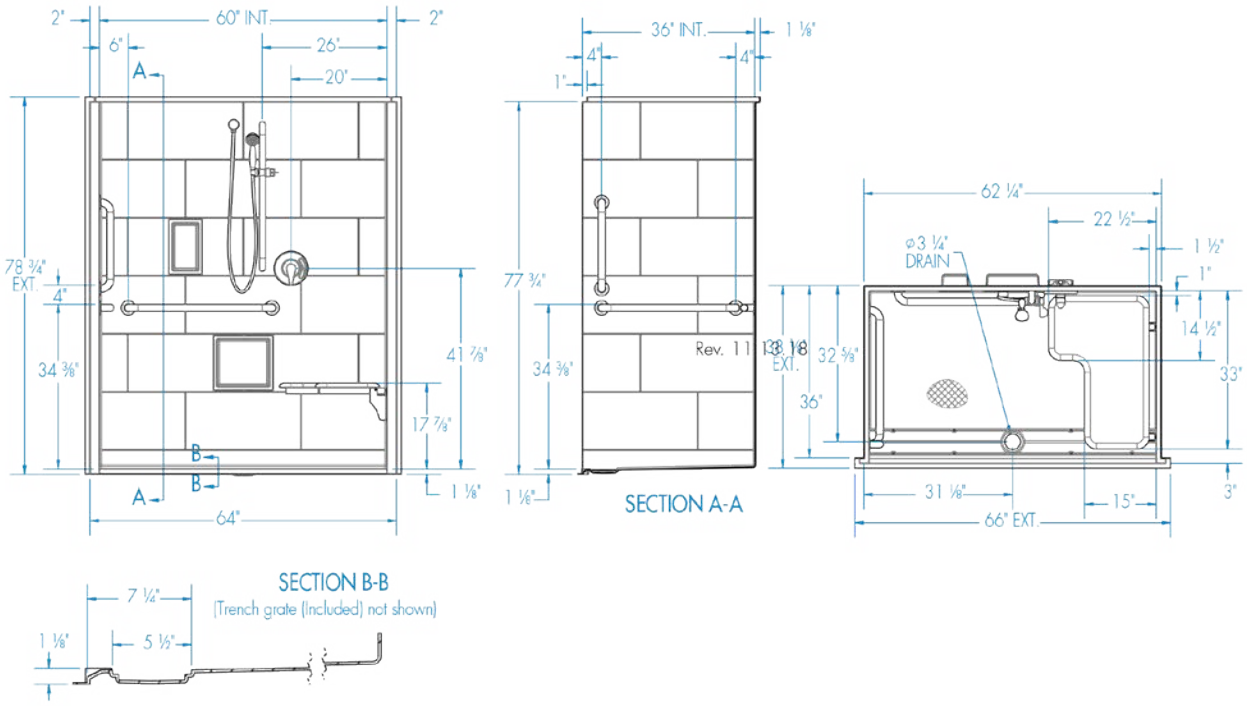
2"
60" INT.
2"
6"
26"
20"
A
78 ¾"
EXT.
4"
34 ⅜"
41 ⅞"
17 ⅞"
B
B
A
1 ⅛"
64"
36" INT.
1 ⅛"
4"
4"
1"
77 ¾"
34 ⅜"
1 ⅛"
SECTION A-A
Rev. 11
62 ¼"
22 ½"
1 ½"
1"
ø3 ¼"
DRAIN
14 ½"
33"
32 ⅝"
36"
3"
31 ⅛"
15"
66" EXT.
SECTION B-B
(Trench grate (Included) not shown)
7 ¼"
1 ⅛"
5 ½"

16036TRCOL





Material : AcrylX™

Features

- 1-Piece Shower stall
- AcrylX™ applied acrylic surface
- 1 COL Inch skirt
- Barrier free when properly installed
- Smooth large 12 Inch x 24 Inch subway tile wall
- Center front drain outlet
- Integral front trench drain
- Level Base
- Slip-resistant textured floor for safety
- Interior dimensions: 60 Inches x 34 Inches x 76-3/4 Inches
- Exterior dimensions: 62-1/4 Inches x 36-1/8 Inches x 78-3/4 Inches
- Stainless steel Tamper-proof grate

16036TRCOL - PRICING CATEGORY : FL

SKU	Color	Configuration	Dimensions & Weight	MSRP
16036TRCOL-BI	Biscuit	Center Drain	60” x 36” x 78 3/4” / 200 lb 1524mm x 914mm x 2000mm / 90.7 kg	Quote Only
16036TRCOL-BO	Bone			Quote Only
16036TRCOL-WH	White			Quote Only

16036TRCOL - ADA COMPLIANT CONFIGURATION

SKU	Color	Configuration	Dimensions & Weight	MSRP
16036TRCOL-BI	Biscuit	Center Drain ADA Compliant Configuration	60” x 36” x 78 3/4” / 200 lb 1524mm x 914mm x 2000mm / 90.7 kg	Quote Only
16036TRCOL-BO	Bone			Quote Only
16036TRCOL-WH	White			Quote Only

16036TRCOL - ADA COMPLIANT CONFIGURATION WITHOUT SEAT

SKU	Color	Configuration	Dimensions & Weight	MSRP
16036TRCOL-BI	Biscuit	Center Drain ADA Compliant Configuration without Seat	60” x 36” x 78 3/4” / 200 lb 1524mm x 914mm x 2000mm / 90.7 kg	Quote Only
16036TRCOL-BO	Bone			Quote Only
16036TRCOL-WH	White			Quote Only

16036TRCOL - ANSI COMPLIANT CONFIGURATION

SKU	Color	Configuration	Dimensions & Weight	MSRP
16036TRCOL-BI	Biscuit	Center Drain ANSI Compliant Configuration	60” x 36” x 78 3/4” / 200 lb 1524mm x 914mm x 2000mm / 90.7 kg	Quote Only
16036TRCOL-BO	Bone			Quote Only
16036TRCOL-WH	White			Quote Only

16036TRCOL - L-BAR CONFIGURATION

SKU	Color	Configuration	Dimensions & Weight	MSRP
16036TRCOL-BI	Biscuit	Center Drain L-Bar Configuration	60” x 36” x 78 3/4” / 200 lb 1524mm x 914mm x 2000mm / 90.7 kg	Quote Only
16036TRCOL-BO	Bone			Quote Only
16036TRCOL-WH	White			Quote Only

16036TRCOL - L-BAR CONFIGURATION AND FOLDING SEAT

SKU	Color	Configuration	Dimensions & Weight	MSRP
16036TRCOL-BI	Biscuit	Center Drain L-Bar Configuration and Folding Seat	60” x 36” x 78 3/4” / 200 lb 1524mm x 914mm x 2000mm / 90.7 kg	Quote Only
16036TRCOL-BO	Bone			Quote Only
16036TRCOL-WH	White			Quote Only

16036TRCOL - U-BAR

SKU	Color	Configuration	Dimensions & Weight	MSRP
16036TRCOL-BI	Biscuit	Center Drain U-Bar	60” x 36” x 78 3/4” / 200 lb 1524mm x 914mm x 2000mm / 90.7 kg	Quote Only
16036TRCOL-BO	Bone			Quote Only
16036TRCOL-WH	White			Quote Only

OPTIONS

SKU	Description	MSRP
4200BRASDRSF	2” Brass Surefit Joint Shower Drain Brass drain material Snap in strainer-stainless steel No-caulk connection.	$ 48
1S3221PDL	White fold-up L-shaped cushioned seat (factory installed) Installed on Left side wall	$ 889
1S3221PDR	White fold-up L-shaped cushioned seat (factory installed) Installed on Right side wall	$ 889
1S3221PHWL	Solid fold-up phenolic seat with slats for drainage (factory installed) Installed on Left side wall Available finishes: White **(WH)**, Teak**(TK)**,	$ 925
1S3221PHL		$ 925
1S3221PHR	Solid fold-up phenolic seat with slats for drainage (factory installed) Installed on Right side wall Available finishes: White **(WH)**, Teak**(TK)**,	$ 925
1S3221PHWR		$ 925
SMSOAPDISH	Small soap dish shipped loose	$ 188
LGSOAPDISH	Large soap dish shipped loose	$ 264

OPTIONS

SKU	Description	MSRP
1VAL300	Single hand chrome pressure balancing mixing valve suitable for commercial use. One-piece ceramic cartridge. Maximum temperature limit stop Installed on right wall	$ 443
1VAL300	Single hand chrome pressure balancing mixing valve suitable for commercial use. One-piece ceramic cartridge. Maximum temperature limit stop Installed on left wall	$ 443
1VAL300	Single hand chrome pressure balancing mixing valve suitable for commercial use. One-piece ceramic cartridge. Maximum temperature limit stop Installed on back wall	$ 443
1ROD114SS	1” diameter Stainless Steel curtain rod	$ 125
1CUR132WHT	66 inch x 72 inch white premium weighted shower curtain Shipped loose	$ 371
1SH0107COMPLETE	Handheld shower assembly with 30 inch slide bar and 60 inch hose. Installed on right wall	$ 417
1SH0107COMPLETE	Handheld shower assembly with 30 inch slide bar and 60 inch hose. Installed on left wall	$ 417
1SH0107COMPLETE	Handheld shower assembly with 30 inch slide bar and 60 inch hose. Installed on back wall	$ 417
TRENCHMAT	Underaly ramp for trench drain shower models Quantity of (2)	$ 405
60SHFWBALL	Extra reinforcement for after market accessories installment on all walls.	$ 406
M-60WGRATE	Optional powder coated white trench grate. Unit comes standard with Stainless Steel.	$ 1041
1BAR109W	Stainless steel accessible 18 inch vertical grab bar, 1-1/4 inch diameter, concealed flanges All grab bars are factory installed and not sold separately. Available finishes: Stainless Steel**(SS)**, Powder Coated White **(W)**	$ 237
1BAR109SS		$ 186
M-BAR125301SS	Package: Stainless steel accessible L-bar configuration (1) 28 inch and (1) 30 inch: 1-1/4 inch diameter, concealed flanges All grab bars are factory installed and not sold separately. Available finishes: Stainless Steel**(SS)**	$ 407
M-BAR153301SS	Package: Stainless steel accessible U-bar configuration (2) 28 inch and (1) 48 inch: 1-1/4 inch diameter, concealed flanges All grab bars are factory installed and not sold separately. Available finishes: Stainless Steel**(SS)**	$ 675

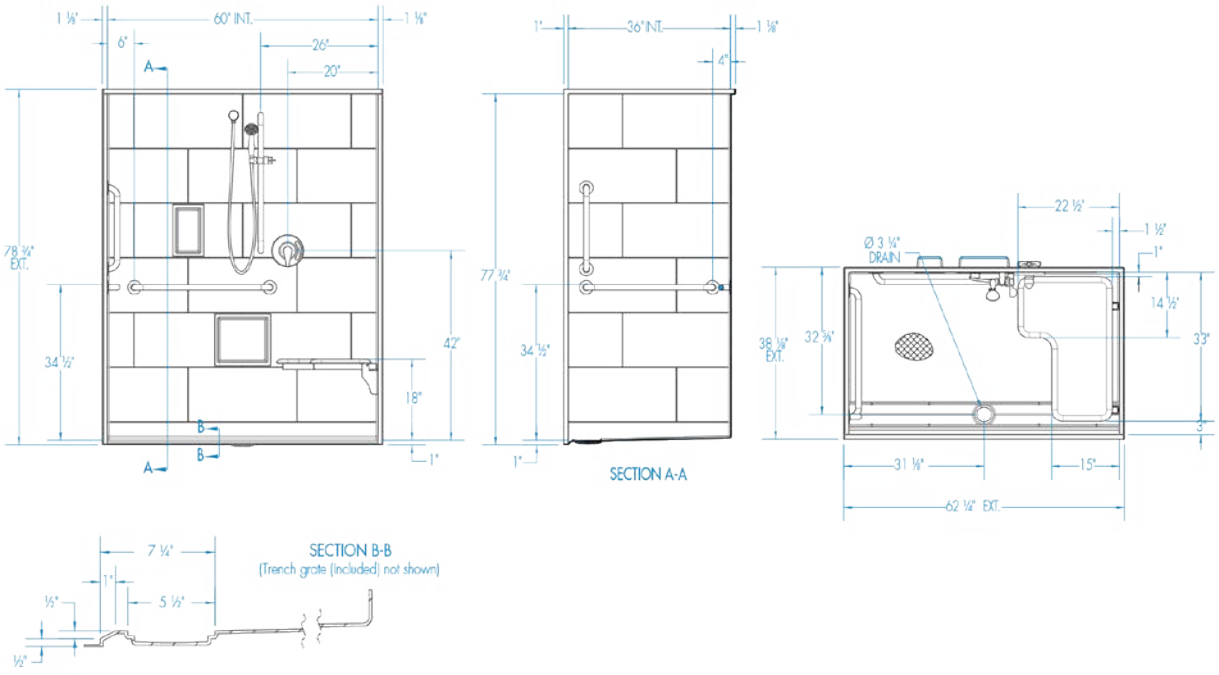
1 ⅛"
60" INT.
1 ⅛"
6"
26"
20"
A
78 ¾" EXT.
34 ½"
42"
18"
1"
B
B
A
1"
36" INT.
1 ⅛"
4"
77 ¾"
34 ½"
1"
SECTION A-A
22 ½"
1 ½"
1"
Ø 3 ¼" DRAIN
14 ½"
38 ⅛" EXT.
32 ¾"
33"
3"
31 ⅛"
15"
62 ¼" EXT.
7 ¼"
SECTION B-B
(Trench grate (included) not shown)
1"
½"
5 ½"
½"

16037BFSD





Material : AcrylX™

Features

- 1-Piece Shower stall
- Pre-leveled base
- AcrylX™ applied acrylic surface
- 3/4 Inch skirt
- 1/4 Inch beveled threshold
- Barrier free when properly installed
- Slip-resistant textured floor for safety
- Smooth wall finish is easy to clean
- Center drain
- Available in East Zone only
- Interior dimensions: 60 Inches x 36-5/8 Inches x 77 Inches
- Exterior dimensions: 62 Inches x 39-3/8 Inches x 78-3/4 Inches

16037BFSD - PRICING CATEGORY : FL

SKU	Color	Configuration	Dimensions & Weight	MSRP
16037BFSD-AL	Almond	Center Drain	60” x 37” x 77” / 202 lb 1524mm x 940mm x 1956mm / 91.61 kg	$ 1902
16037BFSD-BI	Biscuit			$ 1902
16037BFSD-BO	Bone			$ 1902
16037BFSD-WH	White			$ 1867

16037BFSD - ADA COMPLIANT CONFIGURATION

SKU	Color	Configuration	Dimensions & Weight	MSRP
16037BFSD-AL	Almond	Center Drain ADA Compliant Configuration	60” x 37” x 77” / 202 lb 1524mm x 940mm x 1956mm / 91.61 kg	$ 4058
16037BFSD-BI	Biscuit			$ 4058
16037BFSD-BO	Bone			$ 4058
16037BFSD-WH	White			$ 4023

16037BFSD - ADA COMPLIANT CONFIGURATION WITHOUT SEAT

SKU	Color	Configuration	Dimensions & Weight	MSRP
16037BFSD-AL	Almond	Center Drain ADA Compliant Configuration without Seat	60” x 37” x 77” / 202 lb 1524mm x 940mm x 1956mm / 91.61 kg	$ 3437
16037BFSD-BI	Biscuit			$ 3437
16037BFSD-BO	Bone			$ 3437
16037BFSD-WH	White			$ 3402

16037BFSD - ANSI COMPLIANT CONFIGURATION

SKU	Color	Configuration	Dimensions & Weight	MSRP
16037BFSD-AL	Almond	Center Drain ANSI Compliant Configuration	60” x 37” x 77” / 202 lb 1524mm x 940mm x 1956mm / 91.61 kg	$ 4244
16037BFSD-BI	Biscuit			$ 4244
16037BFSD-BO	Bone			$ 4244
16037BFSD-WH	White			$ 4209

16037BFSD - L-BAR CONFIGURATION

SKU	Color	Configuration	Dimensions & Weight	MSRP
16037BFSD-AL	Almond	Center Drain L-Bar Configuration	60” x 37” x 77” / 202 lb 1524mm x 940mm x 1956mm / 91.61 kg	$ 2309
16037BFSD-BI	Biscuit			$ 2309
16037BFSD-BO	Bone			$ 2309
16037BFSD-WH	White			$ 2274

16037BFSD - L-BAR CONFIGURATION AND FOLDING SEAT

SKU	Color	Configuration	Dimensions & Weight	MSRP
16037BFSD-AL	Almond	Center Drain L-Bar Configuration and Folding Seat	60” x 37” x 77” / 202 lb 1524mm x 940mm x 1956mm / 91.61 kg	$ 3198
16037BFSD-BI	Biscuit			$ 3198
16037BFSD-BO	Bone			$ 3198
16037BFSD-WH	White			$ 3163

16037BFSD - U-BAR

SKU	Color	Configuration	Dimensions & Weight	MSRP
16037BFSD-AL	Almond	Center Drain U-Bar	60” x 37” x 77” / 202 lb 1524mm x 940mm x 1956mm / 91.61 kg	$ 2577
16037BFSD-BI	Biscuit			$ 2577
16037BFSD-BO	Bone			$ 2577
16037BFSD-WH	White			$ 2542

OPTIONS

SKU	Description	MSRP
4200BRASDRSF	2” Brass Surefit Joint Shower Drain Brass drain material Snap in strainer-stainless steel No-caulk connection.	$ 48
7175DISH	Stainless steel soap dish	$ 119
1VAL300	Single hand chrome pressure balancing mixing valve suitable for commercial use. One-piece ceramic cartridge. Maximum temperature limit stop Installed on right wall	$ 443
1VAL300	Single hand chrome pressure balancing mixing valve suitable for commercial use. One-piece ceramic cartridge. Maximum temperature limit stop Installed on left wall	$ 443
1VAL300	Single hand chrome pressure balancing mixing valve suitable for commercial use. One-piece ceramic cartridge. Maximum temperature limit stop Installed on back wall	$ 443

OPTIONS

SKU	Description	MSRP
1SH0107COMPLETE	Handheld shower assembly with 30 inch slide bar and 60 inch hose. Installed on right wall	$ 417
1SH0107COMPLETE	Handheld shower assembly with 30 inch slide bar and 60 inch hose. Installed on left wall	$ 417
1SH0107COMPLETE	Handheld shower assembly with 30 inch slide bar and 60 inch hose. Installed on back wall	$ 417
S72360ROD	1” diameter Stainless Steel curtain rod for 60” model	$ 101
60CURTAIN	Curtain for 60” model Shipped loose	$ 156
THRESHOLD	Removable threshold for barrier free showers. Ideal for water containment.	$ 187
35RKBO	Finish repair kit - Case of 12 Available in White **(WH)**, or Bone **(BO)**,	$ 303
35RKWH		$ 303
1BAR109W	Stainless steel accessible 18 inch vertical grab bar, 1-1/4 inch diameter, concealed flanges All grab bars are factory installed and not sold separately. Available finishes: Stainless Steel**(SS)**, Powder Coated White **(W)**	$ 237
1BAR109SS		$ 186
S16037UGBARST	Package: Stainless steel accessible U-bar configuration (2) 28 inch and (1) 48 inch: 1-1/4 inch diameter, concealed flanges All grab bars are factory installed and not sold separately. Available finishes: Stainless Steel**(SS)**	$ 675
S16037GBARST	Package: Stainless steel accessible L-bar configuration (1) 28 inch and (1) 30 inch: 1-1/4 inch diameter, concealed flanges All grab bars are factory installed and not sold separately. Available finishes: Stainless Steel**(SS)**	$ 407
S7036LPHENL	Fold-up phenolic seat (factory installed) Installed on Left side wall Available finishes: White **(WH)**, Teak**(TK)**	$ 925
S7036LPHENWHL		$ 925
S7036LPHENR		$ 925
S7036LPHENWHR		$ 925
S7036LCUSHL	White fold-up L-shaped cushioned seat (factory installed) Installed on Left side wall	$ 889
S7036LCUSHR	White fold-up L-shaped cushioned seat (factory installed) Installed on Right side wall	$ 889

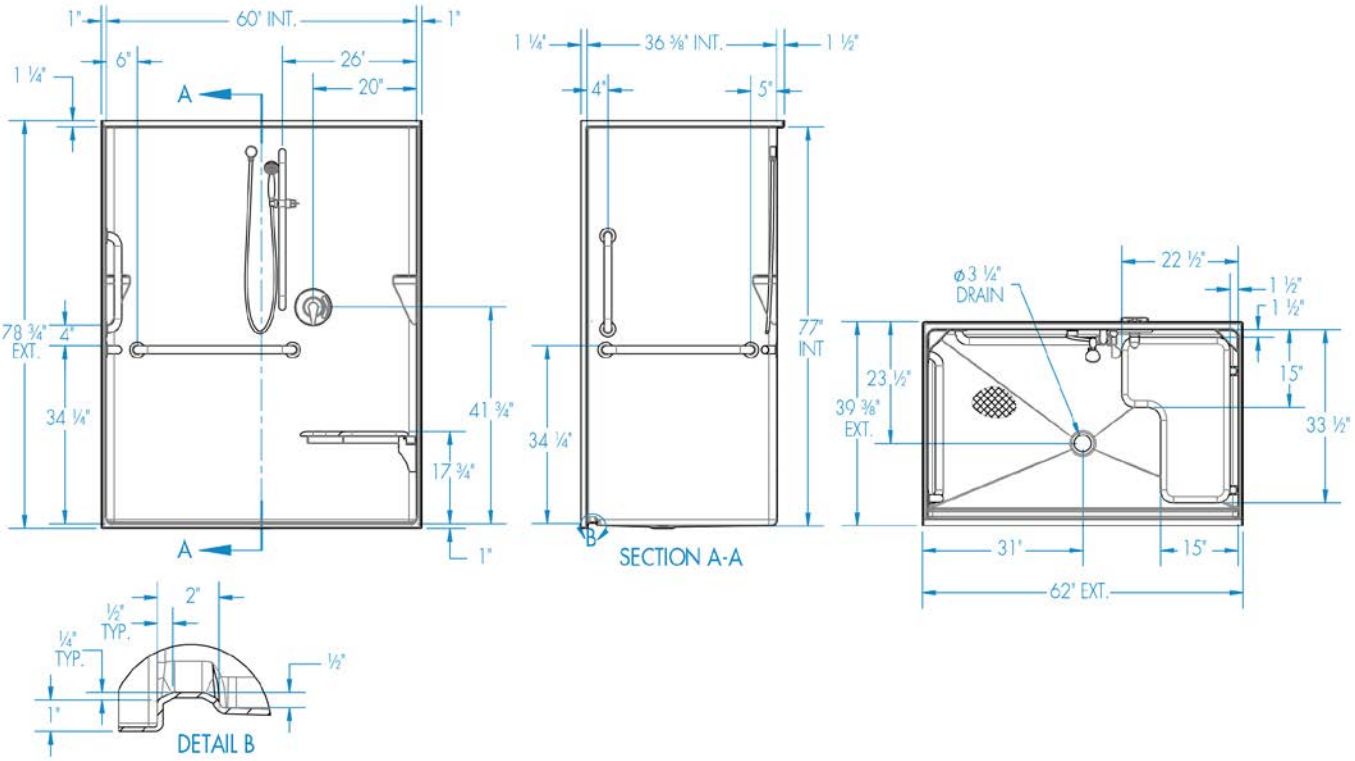
1"
60" INT.
1"
6"
26"
20"
1 ¼"
A
78 ¾"
EXT.
4"
34 ¼"
41 ¾"
17 ¾"
1"
A
1 ¼"
36 ⅜" INT.
1 ½"
4"
5"
77"
INT.
34 ¼"
B
SECTION A-A
ø3 ¼"
DRAIN
22 ½"
1 ½"
1 ½"
15"
33 ½"
23 ½"
39 ⅜"
EXT.
31"
15"
62" EXT.
2"
½"
TYP.
¼"
TYP.
½"
1"
DETAIL B

1603BFSB





Material : AcrylX™

Features

- 1-Piece Shower stall
- Pre-leveled base
- AcrylX™ applied acrylic surface
- 1/2 Inch skirt
- No interior threshold
- Slip-resistant textured floor for safety
- 1/4 Inch exterior threshold
- Barrier free when properly installed
- Smooth wall is easy to clean
- Center Drain
- Region availability: Midwest, Northeast, Southeast
- Interior dimensions: 60 Inches x 34 Inches x 75-1/4 Inches
- Exterior dimensions: 62 Inches x 36-1/4 Inches x 77-1/4 Inches

1603BFSB - PRICING CATEGORY : FL

SKU	Color	Configuration	Dimensions & Weight	MSRP
1603BFSB-AL	Almond	Center Drain	60” x 34” x 75 1/4” / 202 lb 1524mm x 864mm x 1911mm / 91.61 kg	$ 1750
1603BFSB-BI	Biscuit			$ 1750
1603BFSB-BO	Bone			$ 1750
1603BFSB-WH	White			$ 1715

1603BFSB - ADA COMPLIANT CONFIGURATION

SKU	Color	Configuration	Dimensions & Weight	MSRP
1603BFSB-AL	Almond	Center Drain ADA Compliant Configuration	60” x 34” x 75 1/4” / 202 lb 1524mm x 864mm x 1911mm / 91.61 kg	$ 3919
1603BFSB-BI	Biscuit			$ 3919
1603BFSB-BO	Bone			$ 3919
1603BFSB-WH	White			$ 3884

1603BFSB - ADA COMPLIANT CONFIGURATION WITHOUT SEAT

SKU	Color	Configuration	Dimensions & Weight	MSRP
1603BFSB-AL	Almond	Center Drain ADA Compliant Configuration without Seat	60” x 34” x 75 1/4” / 202 lb 1524mm x 864mm x 1911mm / 91.61 kg	$ 3311
1603BFSB-BI	Biscuit			$ 3311
1603BFSB-BO	Bone			$ 3311
1603BFSB-WH	White			$ 3276

1603BFSB - ANSI COMPLIANT CONFIGURATION

SKU	Color	Configuration	Dimensions & Weight	MSRP
1603BFSB-AL	Almond	Center Drain ANSI Compliant Configuration	60” x 34” x 75 1/4” / 202 lb 1524mm x 864mm x 1911mm / 91.61 kg	$ 4105
1603BFSB-BI	Biscuit			$ 4105
1603BFSB-BO	Bone			$ 4105
1603BFSB-WH	White			$ 4070

1603BFSB - L-BAR CONFIGURATION

SKU	Color	Configuration	Dimensions & Weight	MSRP
1603BFSB-AL	Almond	Center Drain L-Bar Configuration	60” x 34” x 75 1/4” / 202 lb 1524mm x 864mm x 1911mm / 91.61 kg	$ 2170
1603BFSB-BI	Biscuit			$ 2170
1603BFSB-BO	Bone			$ 2170
1603BFSB-WH	White			$ 2135

1603BFSB - L-BAR CONFIGURATION AND FOLDING SEAT

SKU	Color	Configuration	Dimensions & Weight	MSRP
1603BFSB-AL	Almond	Center Drain L-Bar Configuration and Folding Seat	60” x 34” x 75 1/4” / 202 lb 1524mm x 864mm x 1911mm / 91.61 kg	$ 3059
1603BFSB-BI	Biscuit			$ 3059
1603BFSB-BO	Bone			$ 3059
1603BFSB-WH	White			$ 3024

1603BFSB - U-BAR

SKU	Color	Configuration	Dimensions & Weight	MSRP
1603BFSB-AL	Almond	Center Drain U-Bar	60” x 34” x 75 1/4” / 202 lb 1524mm x 864mm x 1911mm / 91.61 kg	$ 2451
1603BFSB-BI	Biscuit			$ 2451
1603BFSB-BO	Bone			$ 2451
1603BFSB-WH	White			$ 2416

1603BFSBMA - ETCHED L-BAR CONFIGURATION

SKU	Color	Configuration	Dimensions & Weight	MSRP
1603BFSBMA-AL	Almond	Center Drain Etched L-Bar Configuration	60” x 34” x 75 1/4” / 202 lb 1524mm x 864mm x 1911mm / 91.61 kg	$ 2264
1603BFSBMA-BI	Biscuit			$ 2264
1603BFSBMA-BO	Bone			$ 2264
1603BFSBMA-WH	White			$ 2229

1603BFSBMA - ETCHED L-BAR CONFIGURATION AND FOLDING SEAT

SKU	Color	Configuration	Dimensions & Weight	MSRP
1603BFSBMA-AL	Almond	Center Drain Etched L-Bar Configuration and Folding Seat	60” x 34” x 75 1/4” / 202 lb 1524mm x 864mm x 1911mm / 91.61 kg	$ 3153
1603BFSBMA-BI	Biscuit			$ 3153
1603BFSBMA-BO	Bone			$ 3153
1603BFSBMA-WH	White			$ 3118

1603BFSBMA - MAS 521 CMR COMPLIANT CONFIGURATION

SKU	Color	Configuration	Dimensions & Weight	MSRP
1603BFSBMA-AL	Almond	Center Drain MAS 521 CMR Compliant Configuration	60” x 34” x 75 1/4” / 202 lb 1524mm x 864mm x 1911mm / 91.61 kg	$ 4013
1603BFSBMA-BI	Biscuit			$ 4013
1603BFSBMA-BO	Bone			$ 4013
1603BFSBMA-WH	White			$ 3978

1603BFSBCA - CALIFORNIA TITLE 24 COMPLIANT CONFIGURATION

SKU	Color	Configuration	Dimensions & Weight	MSRP
1603BFSBCA-AL	Almond	Center Drain California Title 24 Compliant Configuration	60” x 34” x 75 1/4” / 202 lb 1524mm x 864mm x 1911mm / 91.61 kg	$ 4000
1603BFSBCA-BI	Biscuit			$ 4000
1603BFSBCA-BO	Bone			$ 4000
1603BFSBCA-WH	White			$ 3965

OPTIONS

SKU	Description	MSRP
4200BRASDRSF	2” Brass Surefit Joint Shower Drain Brass drain material Snap in strainer-stainless steel No-caulk connection.	$ 48
7175DISH	Stainless steel soap dish	$ 119
S4030SHRVLV-R	Single hand chrome pressure balancing mixing valve suitable for commercial use. One-piece ceramic cartridge. Maximum temperature limit stop Installed on right wall	$ 443
S4030SHRVLV-L	Single hand chrome pressure balancing mixing valve suitable for commercial use. One-piece ceramic cartridge. Maximum temperature limit stop Installed on left wall	$ 443
S4030SHRVLV-BK	Single hand chrome pressure balancing mixing valve suitable for commercial use. One-piece ceramic cartridge. Maximum temperature limit stop Installed on back wall	$ 443
S4032MASS-R	Handheld shower assembly with 30 inch slide bar and 60 inch hose. MASS compliant Installed on right wall	$ 417
S4032MASS-L	Handheld shower assembly with 30 inch slide bar and 60 inch hose. MASS compliant Installed on left wall	$ 417
S4032MASS-BK	Handheld shower assembly with 30 inch slide bar and 60 inch hose. MASS compliant Installed on back wall	$ 417
S72360ROD	1” diameter Stainless Steel curtain rod for 60” model	$ 101
60CURTAIN	Curtain for 60” model Shipped loose	$ 156
S7030CUSH-L	White fold-up rectangular cushioned seat (factory installed) MASS Compliant Installed on Left side wall	$ 889

OPTIONS

SKU	Description	MSRP
S7030CUSH-R	White fold-up rectangular cushioned seat (factory installed) MASS Compliant Installed on Right side wall	$ 889
S7030PHENWL	Rectgangular fold-up phenolic seat (factory installed) MASS Compliant Installed on Left side wall Available finishes: White **(WH)**, Teak**(TK)**,	$ 925
S7030PHENL		$ 925
S7030PHENWR	Rectgangular fold-up phenolic seat (factory installed) MASS Compliant Installed on Right side wall Available finishes: White **(WH)**, Teak**(TK)**,	$ 925
S7030PHENR		$ 925
35RKBO	Finish repair kit - Case of 12 Available in White **(WH)**, or Bone **(BO)**,	$ 303
35RKWH		$ 303

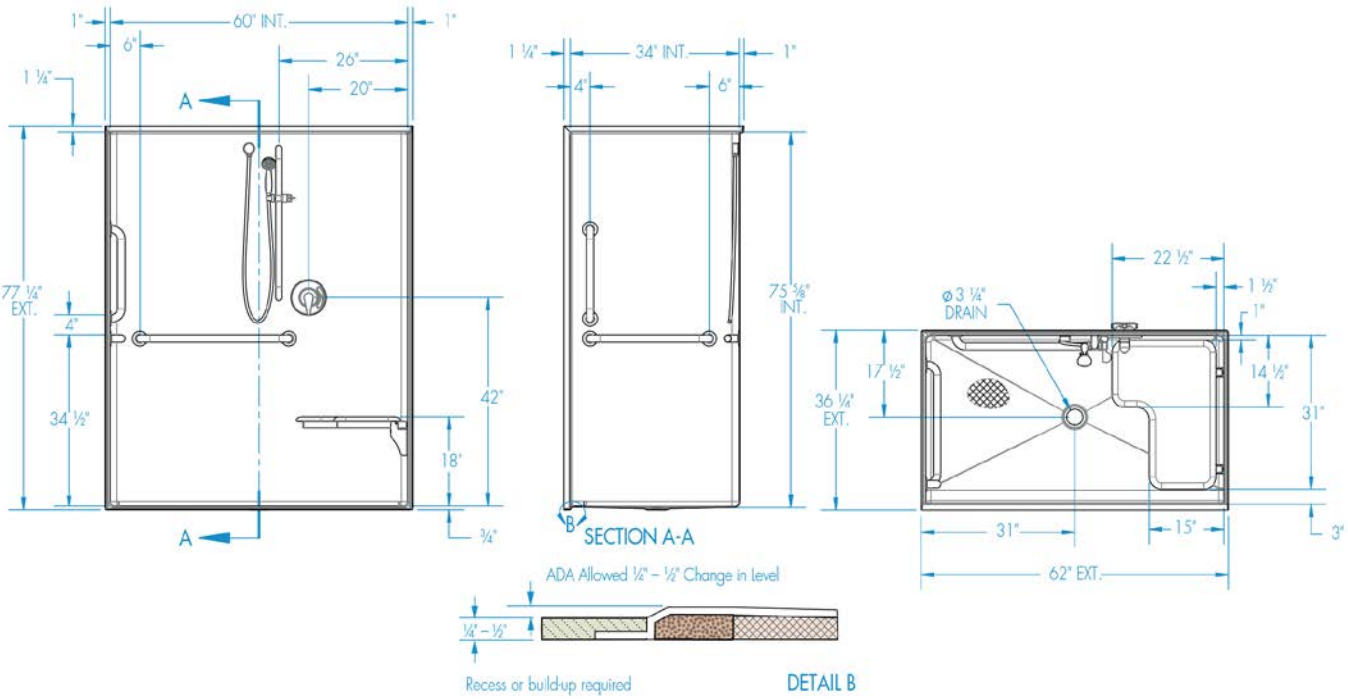
1"
60" INT.
1"
6"
26"
20"
1 ¼"
A
77 ¼" EXT.
4"
34 ½"
42"
18"
¾"
A
1 ¼"
34" INT.
1"
4"
6"
75 ⅛" INT.
B
SECTION A-A
ADA Allowed ¼" – ½" Change in Level
¼" – ½"
Recess or build-up required
DETAIL B
22 ½"
1 ½"
1"
ø3 ¼" DRAIN
17 ½"
36 ¼" EXT.
14 ½"
31"
3"
31"
15"
62" EXT.

1603BFSC



Material : AcrylX™

Features

- 1-Piece Shower stall
- Pre-leveled base
- Slip-resistant textured floor for safety
- AcrylX™ applied acrylic surface
- 3/4 Inch skirt
- No interior threshold
- Barrier free when properly installed
- Smooth wall is easy to clean
- Center Drain
- Interior dimensions: 60 Inches x 34 Inches x 75-5/8 Inches
- Exterior dimensions: 62 Inches x 36-1/4 Inches x 77-1/4 Inches

1603BFSC - PRICING CATEGORY : FL

SKU	Color	Configuration	Dimensions & Weight	MSRP
1603BFSC-AL	Almond	Center Drain	60” x 34” x 75 5/8” / 202 lb 1524mm x 864mm x 1921mm / 91.61 kg	$ 1750
1603BFSC-BI	Biscuit			$ 1750
1603BFSC-BO	Bone			$ 1750
1603BFSC-WH	White			$ 1715

1603BFSC - ADA COMPLIANT CONFIGURATION

SKU	Color	Configuration	Dimensions & Weight	MSRP
1603BFSC-AL	Almond	Center Drain ADA Compliant Configuration	60” x 34” x 75 5/8” / 202 lb 1524mm x 864mm x 1921mm / 91.61 kg	$ 3919
1603BFSC-BI	Biscuit			$ 3919
1603BFSC-BO	Bone			$ 3919
1603BFSC-WH	White			$ 3884

1603BFSC - ADA COMPLIANT CONFIGURATION WITHOUT SEAT

SKU	Color	Configuration	Dimensions & Weight	MSRP
1603BFSC-AL	Almond	Center Drain ADA Compliant Configuration without Seat	60” x 34” x 75 5/8” / 202 lb 1524mm x 864mm x 1921mm / 91.61 kg	$ 3311
1603BFSC-BI	Biscuit			$ 3311
1603BFSC-BO	Bone			$ 3311
1603BFSC-WH	White			$ 3276

1603BFSC - ANSI COMPLIANT CONFIGURATION

SKU	Color	Configuration	Dimensions & Weight	MSRP
1603BFSC-AL	Almond	Center Drain ANSI Compliant Configuration	60” x 34” x 75 5/8” / 202 lb 1524mm x 864mm x 1921mm / 91.61 kg	$ 4105
1603BFSC-BI	Biscuit			$ 4105
1603BFSC-BO	Bone			$ 4105
1603BFSC-WH	White			$ 4070

1603BFSC - L-BAR CONFIGURATION

SKU	Color	Configuration	Dimensions & Weight	MSRP
1603BFSC-AL	Almond	Center Drain L-Bar Configuration	60” x 34” x 75 5/8” / 202 lb 1524mm x 864mm x 1921mm / 91.61 kg	$ 2170
1603BFSC-BI	Biscuit			$ 2170
1603BFSC-BO	Bone			$ 2170
1603BFSC-WH	White			$ 2135

1603BFSC - L-BAR CONFIGURATION AND FOLDING SEAT

SKU	Color	Configuration	Dimensions & Weight	MSRP
1603BFSC-AL	Almond	Center Drain L-Bar Configuration and Folding Seat	60” x 34” x 75 5/8” / 202 lb 1524mm x 864mm x 1921mm / 91.61 kg	$ 3059
1603BFSC-BI	Biscuit			$ 3059
1603BFSC-BO	Bone			$ 3059
1603BFSC-WH	White			$ 3024

1603BFSC - U-BAR

SKU	Color	Configuration	Dimensions & Weight	MSRP
1603BFSC-AL	Almond	Center Drain U-Bar	60” x 34” x 75 5/8” / 202 lb 1524mm x 864mm x 1921mm / 91.61 kg	$ 2451
1603BFSC-BI	Biscuit			$ 2451
1603BFSC-BO	Bone			$ 2451
1603BFSC-WH	White			$ 2416

6036BFSCMA - ETCHED L-BAR CONFIGURATION

SKU	Color	Configuration	Dimensions & Weight	MSRP
6030BFSCMA-BI	Biscuit	Center Drain Etched L-Bar Configuration	60” x 36” x 79” / 210 lb 1524mm x 914mm x 2007mm / 95.24 kg	$ 3501
6030BFSCMA-WH	White			$ 3466

6036BFSCMA - ETCHED L-BAR CONFIGURATION AND FOLDING SEAT

SKU	Color	Configuration	Dimensions & Weight	MSRP
6030BFSCMA-BI	Biscuit	Center Drain Etched L-Bar Configuration and Folding Seat	60” x 36” x 79” / 210 lb 1524mm x 914mm x 2007mm / 95.24 kg	$ 4390

6036BFSCMA - ETCHED L-BAR CONFIGURATION AND FOLDING SEAT

SKU	Color	Configuration	Dimensions & Weight	MSRP
6030BFSCMA-WH	White	Center Drain Etched L-Bar Configuration and Folding Seat	60” x 36” x 79” / 210 lb 1524mm x 914mm x 2007mm / 95.24 kg	$ 4355

6036BFSCMA - MAS 521 CMR COMPLIANT CONFIGURATION

SKU	Color	Configuration	Dimensions & Weight	MSRP
6030BFSCMA-BI	Biscuit	Center Drain MAS 521 CMR Compliant Configuration	60” x 36” x 79” / 210 lb 1524mm x 914mm x 2007mm / 95.24 kg	$ 5250

OPTIONS

SKU	Description	MSRP
4200BRASDRSF	2” Brass Surefit Joint Shower Drain Brass drain material Snap in strainer-stainless steel No-caulk connection.	$ 48
DLN2	Ships ready to install 277 Volt for commercial applications	$ 228
DLN1	Ships ready to install - 120 Volt	$ 228
7175DISH	Stainless steel soap dish	$ 119
S4030SHRVLV-R	Single hand chrome pressure balancing mixing valve suitable for commercial use. One-piece ceramic cartridge. Maximum temperature limit stop Installed on right wall	$ 443
S4030SHRVLV-L	Single hand chrome pressure balancing mixing valve suitable for commercial use. One-piece ceramic cartridge. Maximum temperature limit stop Installed on left wall	$ 443
S4030SHRVLV-BK	Single hand chrome pressure balancing mixing valve suitable for commercial use. One-piece ceramic cartridge. Maximum temperature limit stop Installed on back wall	$ 443
S4032MASS-R	Handheld shower assembly with 30 inch slide bar and 60 inch hose. MASS compliant Installed on right wall	$ 417
S4032MASS-L	Handheld shower assembly with 30 inch slide bar and 60 inch hose. MASS compliant Installed on left wall	$ 417
S4032MASS-BK	Handheld shower assembly with 30 inch slide bar and 60 inch hose. MASS compliant Installed on back wall	$ 417
S72360ROD	1” diameter Stainless Steel curtain rod for 60” model	$ 101
60CURTAIN	Curtain for 60” model Shipped loose	$ 156
VINYLDAM	Vinyl dam for barrier free showers. Ideal for water containment.	$ 125
THRESHOLD	Removable threshold for barrier free showers. Ideal for water containment.	$ 187
S7030CUSH-L	White fold-up rectangular cushioned seat (factory installed) MASS Compliant Installed on Left side wall	$ 889
S7030CUSH-R	White fold-up rectangular cushioned seat (factory installed) MASS Compliant Installed on Right side wall	$ 889
S7030PHENWL	Rectgangular fold-up phenolic seat (factory installed) MASS Compliant Installed on Left side wall Available finishes: White **(WH)**, Teak**(TK)**,	$ 925
S7030PHENL		$ 925
S7030PHENWR	Rectgangular fold-up phenolic seat (factory installed) MASS Compliant Installed on Right side wall Available finishes: White **(WH)**, Teak**(TK)**,	$ 925
S7030PHENR		$ 925

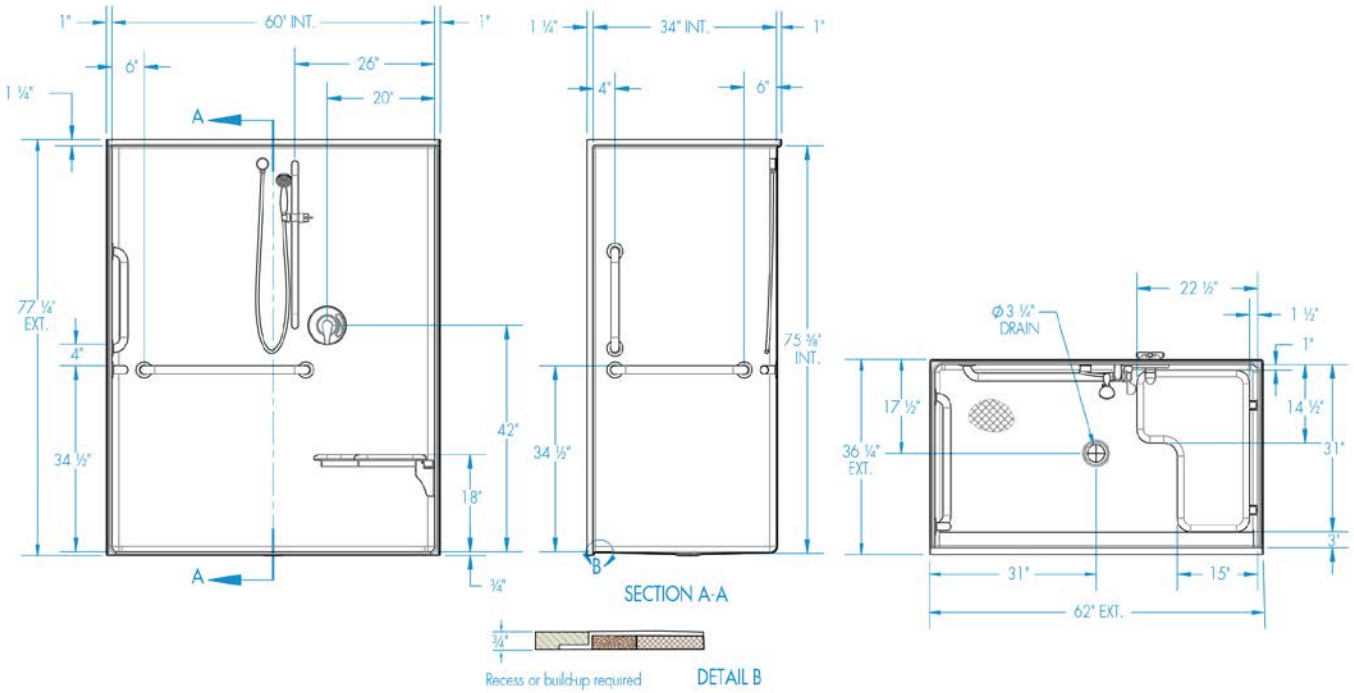
1"
60" INT.
1"
6"
26"
20"
1 ¼"
A
77 ¼" EXT.
4"
34 ½"
42"
18"
¾"
A
1 ¼"
34" INT.
1"
4"
6"
75 ⅛" INT.
34 ½"
B
SECTION A-A
¾"
Recess or build-up required
DETAIL B
Ø3 ¼" DRAIN
22 ½"
1 ½"
1"
17 ½"
14 ½"
36 ¼" EXT.
31"
2"
31"
15"
62" EXT.

1603BFSD



Material : AcrylX™

Features

- 1-Piece Shower
- Pre-leveled base
- AcrylX™ applied acrylic surface
- 3/4 Inch skirt
- 1/2 Inch interior threshold
- Barrier free when properly installed
- Slip-resistant textured floor for safety
- Smooth wall is easy to clean
- Center drain
- Interior dimensions: 60 Inches x 34 Inches x 75-5/8 Inches
- Exterior dimensions: 62 Inches x 36-1/4 Inches x 77-1/4 Inches

1603BFSD - PRICING CATEGORY : FL

SKU	Color	Configuration	Dimensions & Weight	MSRP
1603BFSD-AL	Almond	Center Drain	60” x 34” x 75 5/8” / 202 lb 1524mm x 864mm x 1921mm / 91.61 kg	$ 1750
1603BFSD-BI	Biscuit			$ 1750
1603BFSD-BO	Bone			$ 1750
1603BFSD-WH	White			$ 1715

1603BFSD - ADA COMPLIANT CONFIGURATION

SKU	Color	Configuration	Dimensions & Weight	MSRP
1603BFSD-AL	Almond	Center Drain ADA Compliant Configuration	60” x 34” x 75 5/8” / 202 lb 1524mm x 864mm x 1921mm / 91.61 kg	$ 3919
1603BFSD-BI	Biscuit			$ 3919
1603BFSD-BO	Bone			$ 3919
1603BFSD-WH	White			$ 3884

1603BFSD - ADA COMPLIANT CONFIGURATION WITHOUT SEAT

SKU	Color	Configuration	Dimensions & Weight	MSRP
1603BFSD-AL	Almond	Center Drain ADA Compliant Configuration without Seat	60” x 34” x 75 5/8” / 202 lb 1524mm x 864mm x 1921mm / 91.61 kg	$ 3311
1603BFSD-BI	Biscuit			$ 3311
1603BFSD-BO	Bone			$ 3311
1603BFSD-WH	White			$ 3276

1603BFSD - ANSI COMPLIANT CONFIGURATION

SKU	Color	Configuration	Dimensions & Weight	MSRP
1603BFSD-AL	Almond	Center Drain ANSI Compliant Configuration	60” x 34” x 75 5/8” / 202 lb 1524mm x 864mm x 1921mm / 91.61 kg	$ 5005
1603BFSD-BI	Biscuit			$ 5005
1603BFSD-BO	Bone			$ 5005
1603BFSD-WH	White			$ 4070

1603BFSD - L-BAR CONFIGURATION AND FOLDING SEAT

SKU	Color	Configuration	Dimensions & Weight	MSRP
1603BFSD-AL	Almond	Center Drain L-Bar Configuration and Folding Seat	60” x 34” x 75 5/8” / 202 lb 1524mm x 864mm x 1921mm / 91.61 kg	$ 3059
1603BFSD-BI	Biscuit			$ 3059
1603BFSD-BO	Bone			$ 3059
1603BFSD-WH	White			$ 3024

1603BFSD - U-BAR

SKU	Color	Configuration	Dimensions & Weight	MSRP
1603BFSD-AL	Almond	Center Drain U-Bar	60” x 34” x 75 5/8” / 202 lb 1524mm x 864mm x 1921mm / 91.61 kg	$ 2451
1603BFSD-BI	Biscuit			$ 2451
1603BFSD-BO	Bone			$ 2451
1603BFSD-WH	White			$ 2416

1603BFSDMA - ETCHED L-BAR CONFIGURATION

SKU	Color	Configuration	Dimensions & Weight	MSRP
1603BFSDMA-AL	Almond	Center Drain Etched L-Bar Configuration	60” x 34” x 75 5/8” / 202 lb 1524mm x 864mm x 1921mm / 91.61 kg	$ 2264
1603BFSDMA-BI	Biscuit			$ 2264
1603BFSDMA-BO	Bone			$ 2264
1603BFSDMA-WH	White			$ 2229

1603BFSDMA - ETCHED L-BAR CONFIGURATION AND FOLDING SEAT

SKU	Color	Configuration	Dimensions & Weight	MSRP
1603BFSDMA-AL	Almond	Center Drain Etched L-Bar Configuration and Folding Seat	60” x 34” x 75 5/8” / 202 lb 1524mm x 864mm x 1921mm / 91.61 kg	$ 3153
1603BFSDMA-BI	Biscuit			$ 3153
1603BFSDMA-BO	Bone			$ 3153
1603BFSDMA-WH	White			$ 3118

1603BFSDMA - MAS 521 CMR COMPLIANT CONFIGURATION

SKU	Color	Configuration	Dimensions & Weight	MSRP
1603BFSDMA-AL	Almond	Center Drain MAS 521 CMR Compliant Configuration	60” x 34” x 75 5/8” / 202 lb 1524mm x 864mm x 1921mm / 91.61 kg	$ 4013

1603BFSDMA - MAS 521 CMR COMPLIANT CONFIGURATION

SKU	Color	Configuration	Dimensions & Weight	MSRP
1603BFSDMA-BI	Biscuit	Center Drain MAS 521 CMR Compliant Configuration	60” x 34” x 75 5/8” / 202 lb 1524mm x 864mm x 1921mm / 91.61 kg	$ 4013
1603BFSDMA-BO	Bone			$ 4013
1603BFSDMA-WH	White			$ 3978

1603BFSDCA - CALIFORNIA TITLE 24 COMPLIANT CONFIGURATION

SKU	Color	Configuration	Dimensions & Weight	MSRP
1603BFSDCA-AL	Almond	Center Drain California Title 24 Compliant Configuration	60” x 34” x 75 5/8” / 202 lb 1524mm x 864mm x 1921mm / 91.61 kg	$ 4000
1603BFSDCA-BI	Biscuit			$ 4000
1603BFSDCA-BO	Bone			$ 4000
1603BFSDCA-WH	White			$ 3965

OPTIONS

SKU	Description	MSRP
4200BRASDRSF	2” Brass Surefit Joint Shower Drain Brass drain material Snap in strainer-stainless steel No-caulk connection.	$ 48
7175DISH	Stainless steel soap dish	$ 119
S4030SHRVLV-R	Single hand chrome pressure balancing mixing valve suitable for commercial use. One-piece ceramic cartridge. Maximum temperature limit stop Installed on right wall	$ 443
S4030SHRVLV-L	Single hand chrome pressure balancing mixing valve suitable for commercial use. One-piece ceramic cartridge. Maximum temperature limit stop Installed on left wall	$ 443
S4030SHRVLV-BK	Single hand chrome pressure balancing mixing valve suitable for commercial use. One-piece ceramic cartridge. Maximum temperature limit stop Installed on back wall	$ 443
S4032MASS-R	Handheld shower assembly with 30 inch slide bar and 60 inch hose. MASS compliant Installed on right wall	$ 417
S4032MASS-L	Handheld shower assembly with 30 inch slide bar and 60 inch hose. MASS compliant Installed on left wall	$ 417
S4032MASS-BK	Handheld shower assembly with 30 inch slide bar and 60 inch hose. MASS compliant Installed on back wall	$ 417
S72360ROD	1” diameter Stainless Steel curtain rod for 60” model	$ 101
60CURTAIN	Curtain for 60” model Shipped loose	$ 156
S7030CUSH-L	White fold-up rectangular cushioned seat (factory installed) MASS Compliant Installed on Left side wall	$ 889
S7030CUSH-R	White fold-up rectangular cushioned seat (factory installed) MASS Compliant Installed on Right side wall	$ 889
S7030PHENWL	Rectgangular fold-up phenolic seat (factory installed) MASS Compliant Installed on Left side wall Available finishes: White **(WH)**, Teak**(TK)**,	$ 925
S7030PHENL		$ 925
S7030PHENWR	Rectgangular fold-up phenolic seat (factory installed) MASS Compliant Installed on Right side wall Available finishes: White **(WH)**, Teak**(TK)**,	$ 925
S7030PHENR		$ 925
35RKBO	Finish repair kit - Case of 12 Available in White **(WH)**, or Bone **(BO)**,	$ 303
35RKWH		$ 303

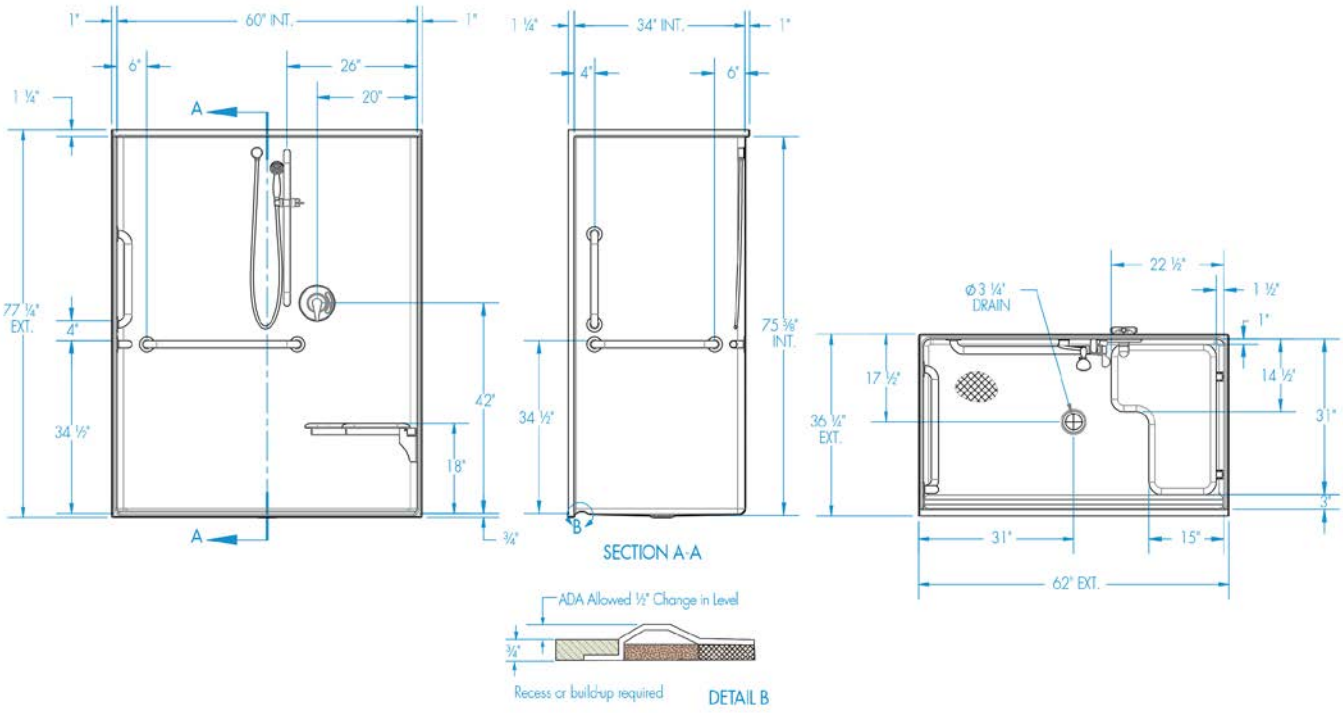
1"
60" INT.
1"
6"
26"
20"
1 ¼"
A
77 ¼" EXT.
4"
34 ½"
42"
18"
A
¾"
1 ¼"
34" INT.
1"
4"
6"
75 ⅜" INT.
34 ½"
B
SECTION A-A
ADA Allowed ½" Change in Level
¾"
Recess or build-up required
DETAIL B
22 ½"
1 ½"
Ø 3 ¼" DRAIN
1"
17 ½"
14 ½"
36 ½" EXT.
31"
3"
31"
15"
62" EXT.

1603BFST



Material : AcrylX™

Features

- 1-Piece Shower
- Pre-leveled base
- AcrylX™ applied acrylic surface
- 3/4 Inch skirt
- No interior threshold
- Barrier free when properly installed
- Smooth tile finish is easy to maintain
- Center drain
- Interior dimensions: 60 Inches x 34 Inches x 74-7/8 Inches
- Exterior dimensions: 62 Inches x 36-1/4 Inches x 76-7/8 Inches (30 year commercial)

1603BFST - PRICING CATEGORY : FL

SKU	Color	Configuration	Dimensions & Weight	MSRP
1603BFST-AL	Almond	Center Drain	60” x 34” x 74 7/8” / 166 lb 1524mm x 864mm x 1902mm / 75.28 kg	$ 1986
1603BFST-BI	Biscuit			$ 1986
1603BFST-BO	Bone			$ 1986
1603BFST-WH	White			$ 1951

1603BFST - ADA COMPLIANT CONFIGURATION

SKU	Color	Configuration	Dimensions & Weight	MSRP
1603BFST-AL	Almond	Center Drain ADA Compliant Configuration	60” x 34” x 74 7/8” / 166 lb 1524mm x 864mm x 1902mm / 75.28 kg	$ 4155
1603BFST-BI	Biscuit			$ 4155
1603BFST-BO	Bone			$ 4155
1603BFST-WH	White			$ 4120

1603BFST - ADA COMPLIANT CONFIGURATION WITHOUT SEAT

SKU	Color	Configuration	Dimensions & Weight	MSRP
1603BFST-AL	Almond	Center Drain ADA Compliant Configuration without Seat	60” x 34” x 74 7/8” / 166 lb 1524mm x 864mm x 1902mm / 75.28 kg	$ 3547
1603BFST-BI	Biscuit			$ 3547
1603BFST-BO	Bone			$ 3547
1603BFST-WH	White			$ 3512

1603BFST - ANSI COMPLIANT CONFIGURATION

SKU	Color	Configuration	Dimensions & Weight	MSRP
1603BFST-AL	Almond	Center Drain ANSI Compliant Configuration	60” x 34” x 74 7/8” / 166 lb 1524mm x 864mm x 1902mm / 75.28 kg	$ 4341
1603BFST-BI	Biscuit			$ 4341
1603BFST-BO	Bone			$ 4341
1603BFST-WH	White			$ 4306

1603BFST - L-BAR CONFIGURATION

SKU	Color	Configuration	Dimensions & Weight	MSRP
1603BFST-AL	Almond	Center Drain L-Bar Configuration	60” x 34” x 74 7/8” / 166 lb 1524mm x 864mm x 1902mm / 75.28 kg	$ 2406
1603BFST-BI	Biscuit			$ 2406
1603BFST-BO	Bone			$ 2406
1603BFST-WH	White			$ 2371

1603BFST - L-BAR CONFIGURATION AND FOLDING SEAT

SKU	Color	Configuration	Dimensions & Weight	MSRP
1603BFST-AL	Almond	Center Drain L-Bar Configuration and Folding Seat	60” x 34” x 74 7/8” / 166 lb 1524mm x 864mm x 1902mm / 75.28 kg	$ 3295
1603BFST-BI	Biscuit			$ 3295
1603BFST-BO	Bone			$ 3295
1603BFST-WH	White			$ 3260

1603BFST - U-BAR

SKU	Color	Configuration	Dimensions & Weight	MSRP
1603BFST-AL	Almond	Center Drain U-Bar	60” x 34” x 74 7/8” / 166 lb 1524mm x 864mm x 1902mm / 75.28 kg	$ 2687
1603BFST-BI	Biscuit			$ 2687
1603BFST-BO	Bone			$ 2687
1603BFST-WH	White			$ 2652

1603BFSTMA - ETCHED L-BAR CONFIGURATION

SKU	Color	Configuration	Dimensions & Weight	MSRP
1603BFSTMA-AL	Almond	Center Drain Etched L-Bar Configuration	60” x 34” x 74 7/8” / 166 lb 1524mm x 864mm x 1902mm / 75.28 kg	$ 2500
1603BFSTMA-BI	Biscuit			$ 2500
1603BFSTMA-BO	Bone			$ 2500
1603BFSTMA-WH	White			$ 2465

1603BFSTMA - ETCHED L-BAR CONFIGURATION AND FOLDING SEAT

SKU	Color	Configuration	Dimensions & Weight	MSRP
1603BFSTMA-AL	Almond	Center Drain Etched L-Bar Configuration and Folding Seat	60” x 34” x 74 7/8” / 166 lb 1524mm x 864mm x 1902mm / 75.28 kg	$ 3389
1603BFSTMA-BI	Biscuit			$ 3389
1603BFSTMA-BO	Bone			$ 3389
1603BFSTMA-WH	White			$ 3354

1603BFSTMA - MAS 521 CMR COMPLIANT CONFIGURATION

SKU	Color	Configuration	Dimensions & Weight	MSRP
1603BFSTMA-AL	Almond	Center Drain MAS 521 CMR Compliant Configuration	60” x 34” x 74 7/8” / 166 lb 1524mm x 864mm x 1902mm / 75.28 kg	$ 4159
1603BFSTMA-BI	Biscuit			$ 4159
1603BFSTMA-BO	Bone			$ 4159
1603BFSTMA-WH	White			$ 4214

1603BFSTCA - CALIFORNIA TITLE 24 COMPLIANT CONFIGURATION

SKU	Color	Configuration	Dimensions & Weight	MSRP
1603BFSTCA-AL	Almond	Center Drain California Title 24 Compliant Configuration	60” x 34” x 74 7/8” / 166 lb 1524mm x 864mm x 1902mm / 75.28 kg	$ 4235
1603BFSTCA-BI	Biscuit			$ 4235
1603BFSTCA-BO	Bone			$ 4235
1603BFSTCA-WH	White			$ 4200

OPTIONS

SKU	Description	MSRP
4200BRASDRSF	2” Brass Surefit Joint Shower Drain Brass drain material Snap in strainer-stainless steel No-caulk connection.	$ 48
7175DISH	Stainless steel soap dish	$ 119
S72360ROD	1” diameter Stainless Steel curtain rod for 60” model	$ 101
60CURTAIN	Curtain for 60” model Shipped loose	$ 156
35RKBO	Finish repair kit - Case of 12 Available in White **(WH)**, or Bone **(BO)**,	$ 303
35RKWH		$ 303
S7036LPHENL	Fold-up phenolic seat (factory installed) Installed on Left side wall Available finishes: White **(WH)**, Teak**(TK)**	$ 925
S7036LPHENWHL		$ 925
S7036LPHENR		$ 925
S7036LPHENWHR		$ 925

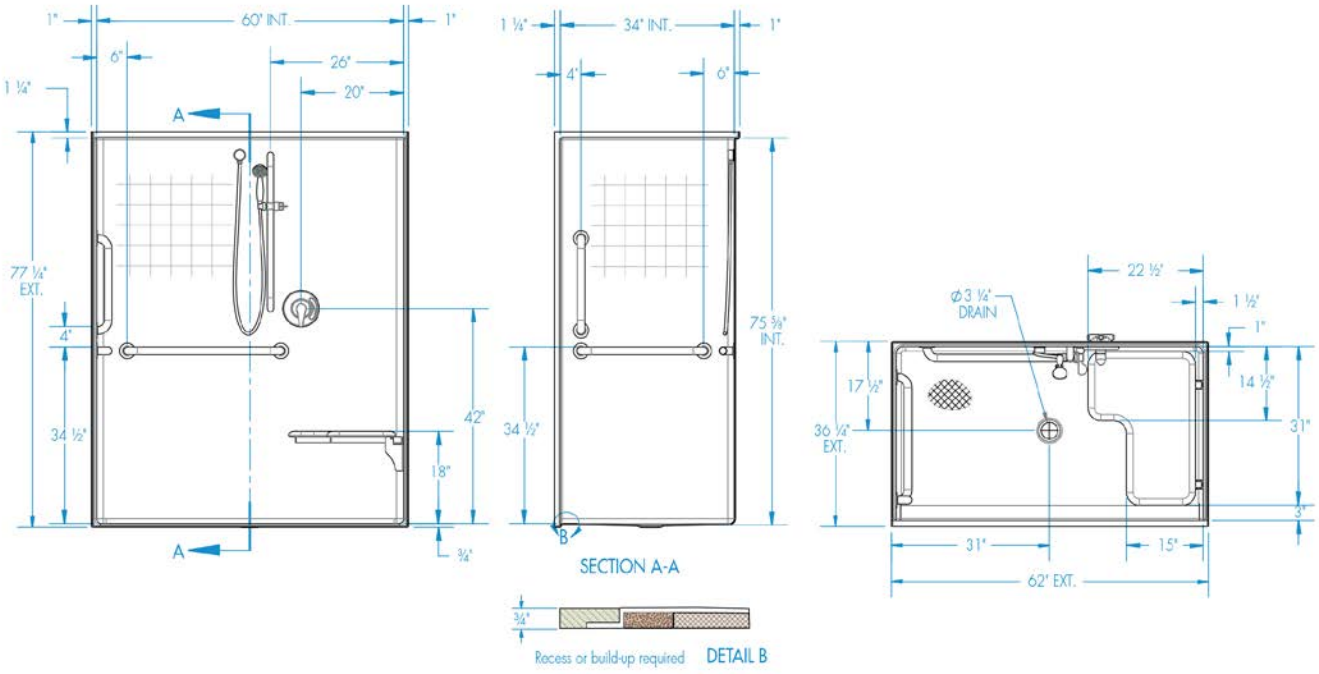
1"
60" INT.
1"
6"
26"
20"
1 ¼"
A
77 ¼" EXT.
4"
34 ½"
42"
18"
¾"
A
1 ⅛"
34" INT.
1"
4"
6"
75 ⅝" INT.
34 ½"
B
SECTION A-A
¾"
Recess or build-up required
DETAIL B
Ø3 ¼" DRAIN
22 ½"
1 ½"
1"
14 ½"
17 ½"
36 ¼" EXT.
31"
3"
31"
15"
62" EXT.

1603BFSTD



Material : AcrylX™

Features

- 1-Piece Shower
- Region availability: East Zone
- Pre-leveled base
- AcrylX™ applied acrylic surface
- 3/4 Inch skirt
- 1/2 Inch interior threshold
- Barrier free when properly installed
- Slip-resistant textured floor for safety
- Smooth tile finish is easy to maintain
- Center drain
- Interior dimensions: 60 Inches x 34 Inches x 75-5/8 Inches
- Exterior dimensions: 62 Inches x 36-1/4 Inches x 77-1/4 Inches

1603BFSTD - PRICING CATEGORY : FL

SKU	Color	Configuration	Dimensions & Weight	MSRP
1603BFSTD-AL	Almond	Center Drain	60” x 34” x 75 5/8” / 202 lb 1524mm x 864mm x 1921mm / 91.61 kg	$ 1986
1603BFSTD-BI	Biscuit			$ 1986
1603BFSTD-BO	Bone			$ 1986
1603BFSTD-WH	White			$ 1951

1603BFSTD - ADA COMPLIANT CONFIGURATION

SKU	Color	Configuration	Dimensions & Weight	MSRP
1603BFSTD-AL	Almond	Center Drain ADA Compliant Configuration	60” x 34” x 75 5/8” / 202 lb 1524mm x 864mm x 1921mm / 91.61 kg	$ 4155
1603BFSTD-BI	Biscuit			$ 4155
1603BFSTD-BO	Bone			$ 4155
1603BFSTD-WH	White			$ 4120

1603BFSTD - ADA COMPLIANT CONFIGURATION WITHOUT SEAT

SKU	Color	Configuration	Dimensions & Weight	MSRP
1603BFSTD-AL	Almond	Center Drain ADA Compliant Configuration without Seat	60” x 34” x 75 5/8” / 202 lb 1524mm x 864mm x 1921mm / 91.61 kg	$ 3547
1603BFSTD-BI	Biscuit			$ 3547
1603BFSTD-BO	Bone			$ 3547
1603BFSTD-WH	White			$ 3512

1603BFSTD - ANSI COMPLIANT CONFIGURATION

SKU	Color	Configuration	Dimensions & Weight	MSRP
1603BFSTD-AL	Almond	Center Drain ANSI Compliant Configuration	60” x 34” x 75 5/8” / 202 lb 1524mm x 864mm x 1921mm / 91.61 kg	$ 4341
1603BFSTD-BI	Biscuit			$ 4341
1603BFSTD-BO	Bone			$ 4341
1603BFSTD-WH	White			$ 4306

1603BFSTD - L-BAR CONFIGURATION

SKU	Color	Configuration	Dimensions & Weight	MSRP
1603BFSTD-AL	Almond	Center Drain L-Bar Configuration	60” x 34” x 75 5/8” / 202 lb 1524mm x 864mm x 1921mm / 91.61 kg	$ 2406
1603BFSTD-BI	Biscuit			$ 2406
1603BFSTD-BO	Bone			$ 2406
1603BFSTD-WH	White			$ 2371

1603BFSTD - L-BAR CONFIGURATION AND FOLDING SEAT

SKU	Color	Configuration	Dimensions & Weight	MSRP
1603BFSTD-AL	Almond	Center Drain L-Bar Configuration and Folding Seat	60” x 34” x 75 5/8” / 202 lb 1524mm x 864mm x 1921mm / 91.61 kg	$ 3295
1603BFSTD-BI	Biscuit			$ 3295
1603BFSTD-BO	Bone			$ 3295
1603BFSTD-WH	White			$ 3260

1603BFSTD - U-BAR

SKU	Color	Configuration	Dimensions & Weight	MSRP
1603BFSTD-AL	Almond	Center Drain U-Bar	60” x 34” x 75 5/8” / 202 lb 1524mm x 864mm x 1921mm / 91.61 kg	$ 2687
1603BFSTD-BI	Biscuit			$ 2687
1603BFSTD-BO	Bone			$ 2687
1603BFSTD-WH	White			$ 2652

OPTIONS

SKU	Description	MSRP
4200BRASDRSF	2” Brass Surefit Joint Shower Drain Brass drain material Snap in strainer-stainless steel No-caulk connection.	$ 48
7175DISH	Stainless steel soap dish	$ 119
1VAL300	Single hand chrome pressure balancing mixing valve suitable for commercial use. One-piece ceramic cartridge. Maximum temperature limit stop Installed on right wall	$ 443
1VAL300	Single hand chrome pressure balancing mixing valve suitable for commercial use. One-piece ceramic cartridge. Maximum temperature limit stop Installed on left wall	$ 443
1VAL300	Single hand chrome pressure balancing mixing valve suitable for commercial use. One-piece ceramic cartridge. Maximum temperature limit stop Installed on back wall	$ 443

OPTIONS

SKU	Description	MSRP
1SH0107COMPLETE	Handheld shower assembly with 30 inch slide bar and 60 inch hose. Installed on right wall	$ 417
1SH0107COMPLETE	Handheld shower assembly with 30 inch slide bar and 60 inch hose. Installed on left wall	$ 417
1SH0107COMPLETE	Handheld shower assembly with 30 inch slide bar and 60 inch hose. Installed on back wall	$ 417
S72360ROD	1” diameter Stainless Steel curtain rod for 60” model	$ 101
60CURTAIN	Curtain for 60” model Shipped loose	$ 156
35RKBO	Finish repair kit - Case of 12 Available in White **(WH)**, or Bone **(BO)**,	$ 303
35RKWH		$ 303
1BAR109W	Stainless steel accessible 18 inch vertical grab bar, 1-1/4 inch diameter, concealed flanges All grab bars are factory installed and not sold separately. Available finishes: Stainless Steel**(SS)**, Powder Coated White **(W)**	$ 237
1BAR109SS		$ 186
S1603GBARST	Package: Stainless steel accessible L-bar configuration (1) 24 inch and (1) 30 inch: 1-1/4 inch diameter, concealed flanges All grab bars are factory installed and not sold separately. Available finishes: Stainless Steel**(SS)**	$ 420
S7030LCUSHL	White fold-up L-shaped cushioned seat (factory installed) Installed on Left side wall	$ 889
S7030LCUSHR	White fold-up L-shaped cushioned seat (factory installed) Installed on Right side wall	$ 889
S7030PHENL	Rectgangular fold-up phenolic seat (factory installed) Installed on Left side wall Available finishes: White **(WH)**, Teak**(TK)**	$ 925
S7030PHENWL		$ 925
S7030PHENWR	Rectgangular fold-up phenolic seat (factory installed) Installed on Right side wall Available finishes: White **(WH)**, Teak**(TK)**	$ 925
S7030PHENR		$ 925

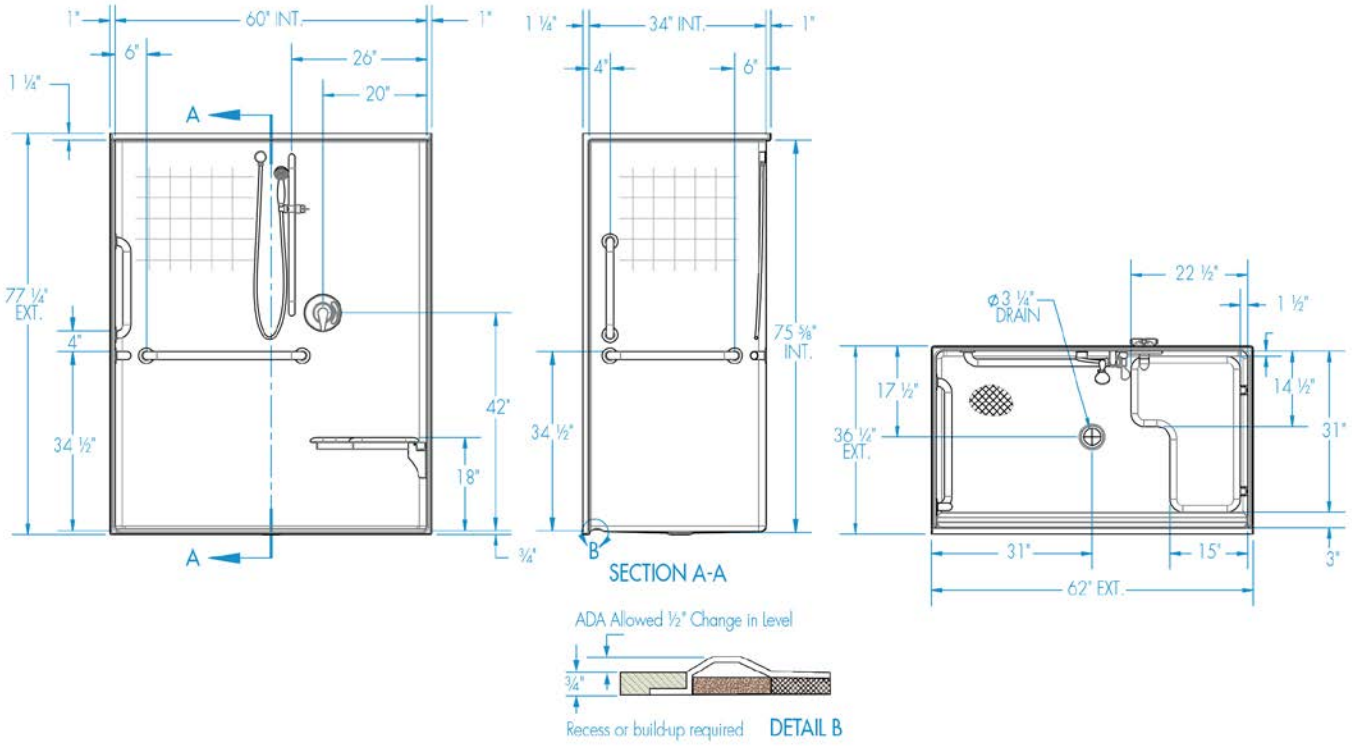
1"
60" INT.
1"
6"
26"
20"
1 ¼"
A
77 ¼" EXT.
4"
34 ½"
42"
18"
¾"
A
1 ¼"
34" INT.
1"
4"
6"
75 ⅝" INT.
34 ½"
B
SECTION A-A
ADA Allowed ½" Change in Level
¾"
Recess or build-up required
DETAIL B
22 ½"
1 ½"
ø3 ¼" DRAIN
17 ½"
36 ¼" EXT.
14 ½"
31"
31"
15"
3"
62" EXT.

1603CFS



Material : AcrylX™

Features

- 1-Piece shower
- AcrylX™ applied acrylic surface
- 1 3/4 Inch skirt
- 1/2 Inch interior threshold
- Barrier free when properly installed
- Smooth wall is easy to clean
- Center drain
- Slip-resistant textured floor for safety
- Interior dimensions: 60 Inches x 34 Inches x 74-5/16 Inches
- Exterior dimensions: 62 Inches x 36-1/4 Inches x 77-5/16 Inches

1603CFS - PRICING CATEGORY : FL

SKU	Color	Configuration	Dimensions & Weight	MSRP
1603CFS-AL	Almond	Center Drain	60” x 34” x 74.313” / 165 lb 1524mm x 864mm x 1888mm / 74.83 kg	$ 1750
1603CFS-BI	Biscuit			$ 1750
1603CFS-BO	Bone			$ 1750
1603CFS-WH	White			$ 1715

1603CFS - ADA COMPLIANT CONFIGURATION

SKU	Color	Configuration	Dimensions & Weight	MSRP
1603CFS-AL	Almond	Center Drain ADA Compliant Configuration	60” x 34” x 74.313” / 165 lb 1524mm x 864mm x 1888mm / 74.83 kg	$ 3919
1603CFS-BI	Biscuit			$ 3919
1603CFS-BO	Bone			$ 3919
1603CFS-WH	White			$ 3884

1603CFS - ADA COMPLIANT CONFIGURATION WITHOUT SEAT

SKU	Color	Configuration	Dimensions & Weight	MSRP
1603CFS-AL	Almond	Center Drain ADA Compliant Configuration without Seat	60” x 34” x 74.313” / 165 lb 1524mm x 864mm x 1888mm / 74.83 kg	$ 3311
1603CFS-BI	Biscuit			$ 3311
1603CFS-BO	Bone			$ 3311
1603CFS-WH	White			$ 3276

1603CFS - ANSI COMPLIANT CONFIGURATION

SKU	Color	Configuration	Dimensions & Weight	MSRP
1603CFS-AL	Almond	Center Drain ANSI Compliant Configuration	60” x 34” x 74.313” / 165 lb 1524mm x 864mm x 1888mm / 74.83 kg	$ 5005
1603CFS-BI	Biscuit			$ 5005
1603CFS-BO	Bone			$ 5005
1603CFS-WH	White			$ 4070

1603CFS - L-BAR CONFIGURATION

SKU	Color	Configuration	Dimensions & Weight	MSRP
1603CFS-AL	Almond	Center Drain L-Bar Configuration	60” x 34” x 74.313” / 165 lb 1524mm x 864mm x 1888mm / 74.83 kg	$ 2170
1603CFS-BI	Biscuit			$ 2170
1603CFS-BO	Bone			$ 2170
1603CFS-WH	White			$ 2135

1603CFS - L-BAR CONFIGURATION AND FOLDING SEAT

SKU	Color	Configuration	Dimensions & Weight	MSRP
1603CFS-AL	Almond	Center Drain L-Bar Configuration and Folding Seat	60” x 34” x 74.313” / 165 lb 1524mm x 864mm x 1888mm / 74.83 kg	$ 3059
1603CFS-BI	Biscuit			$ 3059
1603CFS-BO	Bone			$ 3059
1603CFS-WH	White			$ 3024

1603CFS - U-BAR

SKU	Color	Configuration	Dimensions & Weight	MSRP
1603CFS-AL	Almond	Center Drain U-Bar	60” x 34” x 74.313” / 165 lb 1524mm x 864mm x 1888mm / 74.83 kg	$ 2451
1603CFS-BI	Biscuit			$ 2451
1603CFS-BO	Bone			$ 2451
1603CFS-WH	White			$ 2416

OPTIONS

SKU	Description	MSRP
4200BRASDRSF	2” Brass Surefit Joint Shower Drain Brass drain material Snap in strainer-stainless steel No-caulk connection.	$ 48
7175DISH	Stainless steel soap dish	$ 119
1VAL300	Single hand chrome pressure balancing mixing valve suitable for commercial use. One-piece ceramic cartridge. Maximum temperature limit stop Installed on right wall	$ 443
1VAL300	Single hand chrome pressure balancing mixing valve suitable for commercial use. One-piece ceramic cartridge. Maximum temperature limit stop Installed on left wall	$ 443
1VAL300	Single hand chrome pressure balancing mixing valve suitable for commercial use. One-piece ceramic cartridge. Maximum temperature limit stop Installed on back wall	$ 443

OPTIONS

SKU	Description	MSRP
1SH0107COMPLETE	Handheld shower assembly with 30 inch slide bar and 60 inch hose. Installed on right wall	$ 417
1SH0107COMPLETE	Handheld shower assembly with 30 inch slide bar and 60 inch hose. Installed on left wall	$ 417
1SH0107COMPLETE	Handheld shower assembly with 30 inch slide bar and 60 inch hose. Installed on back wall	$ 417
S72360ROD	1” diameter Stainless Steel curtain rod for 60” model	$ 101
60CURTAIN	Curtain for 60” model Shipped loose	$ 156
35RKBO	Finish repair kit - Case of 12 Available in White **(WH)**, or Bone **(BO)**,	$ 303
35RKWH		$ 303
1BAR109W	Stainless steel accessible 18 inch vertical grab bar, 1-1/4 inch diameter, concealed flanges All grab bars are factory installed and not sold separately. Available finishes: Stainless Steel**(SS)**, Powder Coated White **(W)**	$ 237
1BAR109SS		$ 186
S1603GBARST	Package: Stainless steel accessible L-bar configuration (1) 24 inch and (1) 30 inch: 1-1/4 inch diameter, concealed flanges All grab bars are factory installed and not sold separately. Available finishes: Stainless Steel**(SS)**	$ 420
S7030LCUSHL	White fold-up L-shaped cushioned seat (factory installed) Installed on Left side wall	$ 889
S7030LCUSHR	White fold-up L-shaped cushioned seat (factory installed) Installed on Right side wall	$ 889
S7030PHENL	Rectgangular fold-up phenolic seat (factory installed) Installed on Left side wall Available finishes: White **(WH)**, Teak**(TK)**	$ 925
S7030PHENWL		$ 925
S7030PHENWR	Rectgangular fold-up phenolic seat (factory installed) Installed on Right side wall Available finishes: White **(WH)**, Teak**(TK)**	$ 925
S7030PHENR		$ 925

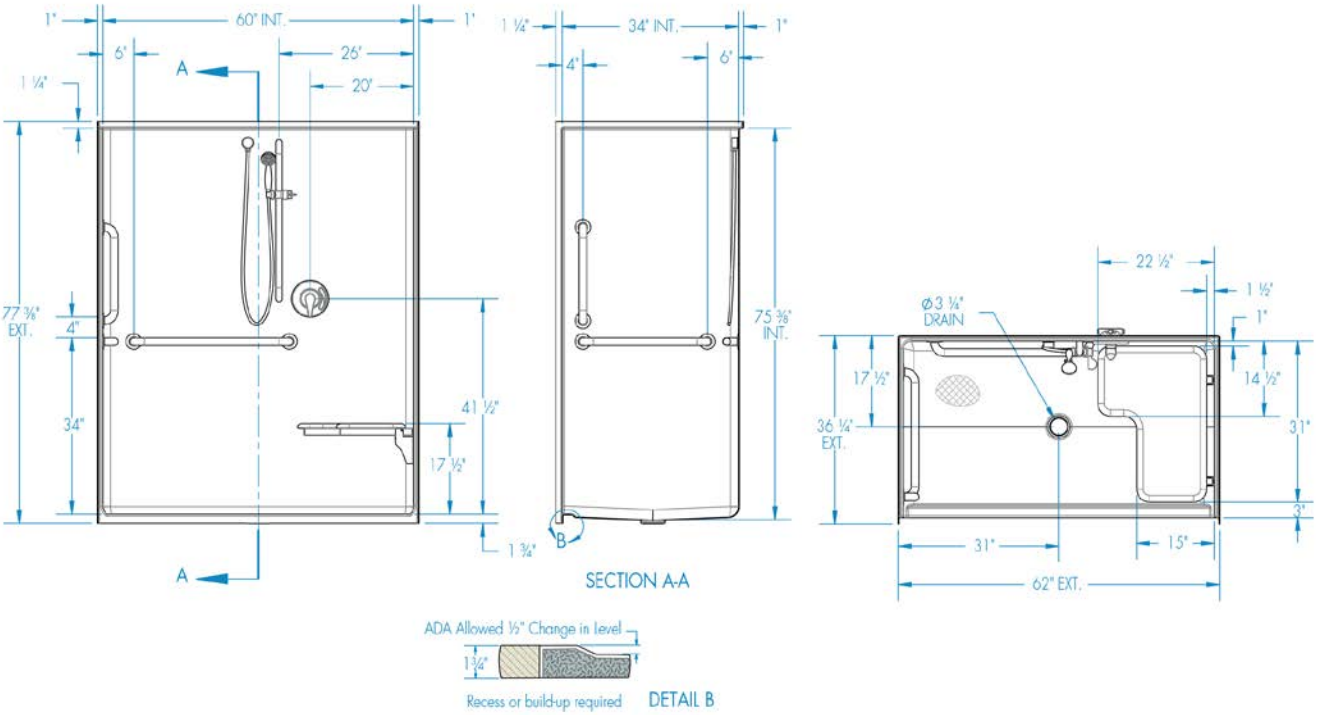
1"
60" INT.
1"
6"
25"
20"
A
1 ¼"
77 ⅜" EXT.
4"
34"
41 ½"
17 ½"
A
1 ¼"
34" INT.
1"
4"
6"
75 ⅜" INT.
B
1 ¾"
SECTION A-A
22 ½"
1 ½"
1"
Ø3 ¼" DRAIN
17 ½"
14 ½"
36 ¼" EXT.
31"
3"
31"
15"
62" EXT.
ADA Allowed ½" Change in Level
1¾"
Recess or build-up required
DETAIL B

1603TSCB





Material : AcrylX™

Features

- 1-Piece Shower
- East zone only
- AcrylX™ applied acrylic surface
- Low threshold -4 Inch skirt
- 3 Inch interior threshold
- Slip-resistant textured floor for safety
- Smooth wall is easy to clean
- Center drain
- Molded toiletry shelves
- Interior dimensions: 58 Inches x 33 Inches x 76-1/4 Inches
- Exterior dimensions: 60 Inches x 35 Inches x 78 Inches

1603TSCB - PRICING CATEGORY : FL

SKU	Color	Configuration	Dimensions & Weight	MSRP
1603TSCB-AL	Almond	Center Drain	60” x 33” x 76 1/4” / 153 lb 1524mm x 838mm x 1937mm / 69.39 kg	$ 1433
1603TSCB-WH	White			$ 1398
1603TSCBE-BI	Biscuit			$ 1433
1603TSCBE-BO	Bone			$ 1433

1603TSCB - TWO VERTICAL ENTRY BARS AND HORIZONTAL BAR

SKU	Color	Configuration	Dimensions & Weight	MSRP
1603TSCB-AL	Almond	Center Drain Two Vertical Entry Bars and Horizontal Bar	60” x 33” x 76 1/4” / 153 lb 1524mm x 838mm x 1937mm / 69.39 kg	$ 2111
1603TSCB-WH	White			$ 2076
1603TSCBE-BI	Biscuit			$ 2111
1603TSCBE-BO	Bone			$ 2111

1603TSCB - TWO VERTICAL ENTRY BARS, HORIZONTAL BAR AND FOLDING SEAT

SKU	Color	Configuration	Dimensions & Weight	MSRP
1603TSCB-AL	Almond	Center Drain Two Vertical Entry Bars, Horizontal Bar and Folding Seat	60” x 33” x 76 1/4” / 153 lb 1524mm x 838mm x 1937mm / 69.39 kg	$ 3000
1603TSCB-WH	White			$ 2965
1603TSCBE-BI	Biscuit			$ 3000
1603TSCBE-BO	Bone			$ 3000

OPTIONS

SKU	Description	MSRP
4200BRASDRSF	2” Brass Surefit Joint Shower Drain Brass drain material Snap in strainer-stainless steel No-caulk connection.	$ 48
7175DISH	Stainless steel soap dish	$ 119
1VAL300	Single hand chrome pressure balancing mixing valve suitable for commercial use. One-piece ceramic cartridge. Maximum temperature limit stop Installed on right wall	$ 443
1VAL300	Single hand chrome pressure balancing mixing valve suitable for commercial use. One-piece ceramic cartridge. Maximum temperature limit stop Installed on left wall	$ 443
1VAL300	Single hand chrome pressure balancing mixing valve suitable for commercial use. One-piece ceramic cartridge. Maximum temperature limit stop Installed on back wall	$ 443
1SH0107COMPLETE	Handheld shower assembly with 30 inch slide bar and 60 inch hose. Installed on right wall	$ 417
1SH0107COMPLETE	Handheld shower assembly with 30 inch slide bar and 60 inch hose. Installed on left wall	$ 417
1SH0107COMPLETE	Handheld shower assembly with 30 inch slide bar and 60 inch hose. Installed on back wall	$ 417
S72360ROD	1” diameter Stainless Steel curtain rod for 60” model	$ 101
60CURTAIN	Curtain for 60” model Shipped loose	$ 156
35RKBO	Finish repair kit - Case of 12 Available in White **(WH)**, or Bone **(BO)**,	$ 303
35RKWH		$ 303
1BAR140W	Stainless steel accessible 24 inch grab bar, 1-1/4 inch diameter, concealed flanges All grab bars are factory installed and not sold separately. Available finishes: Stainless Steel**(SS)**, Powder Coated White **(W)**	$ 271
1BAR140SS		$ 226
S7033SEATL	White fold-up single cushioned seat (factory installed) Installed on Left side wall	$ 801
S7033SEATLR	White fold-up single cushioned seat (factory installed) Installed on Right side wall	$ 801
S7033PHENL	Solid fold-up phenolic seat with slats for drainage (factory installed) Installed on Left side wall Available finishes: White **(WH)**, Teak**(TK)**	$ 1120
S7033PHENWL		$ 1120
S7033PHENWR	Solid fold-up phenolic seat with slats for drainage (factory installed) Installed on Right side wall Available finishes: White **(WH)**, Teak**(TK)**	$ 1120
S7033PHENR		$ 1120

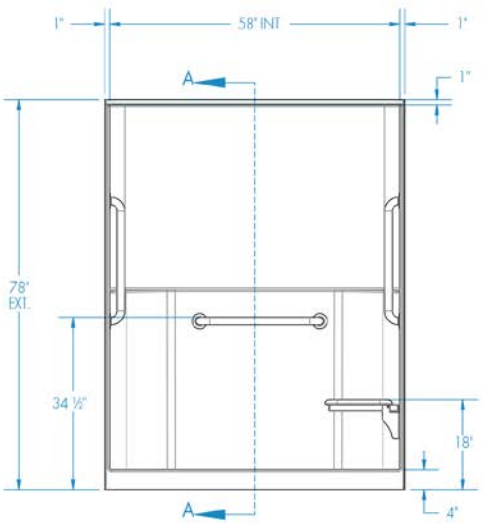

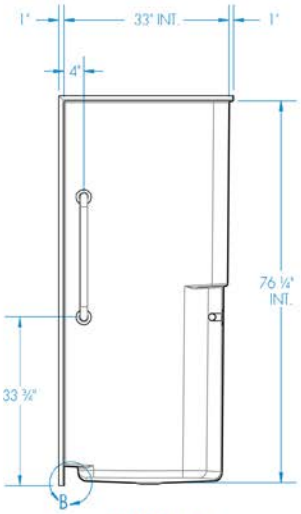

SECTION A-A

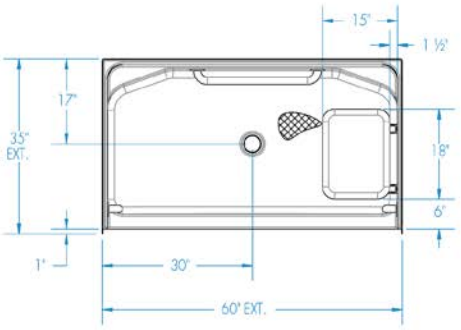



DETAIL B

1623BFSTD





Material : AcrylX™

Features

- 1-Piece Shower
- Pre-leveled base
- AcrylX™ applied acrylic surface
- 3/4 Inch skirt
- 1/2 Inch beveled threshold
- Slip-resistant textured floor for safety
- Barrier free when properly installed
- Smooth tile finish is easy to maintain
- Center drain

1623BFSTD - PRICING CATEGORY : FL

SKU	Color	Configuration	Dimensions & Weight	MSRP
1623BFSTD-AL	Almond	Center Drain	60” x 30” x 74 7/8” / 180 lb 1524mm x 762mm x 1902mm / 81.63 kg	$ 1713
1623BFSTD-BI	Biscuit			$ 1713
1623BFSTD-BO	Bone			$ 1713
1623BFSTD-WH	White			$ 1678

1623BFSTD - ADA COMPLIANT CONFIGURATION

SKU	Color	Configuration	Dimensions & Weight	MSRP
1623BFSTD-AL	Almond	Center Drain ADA Compliant Configuration	60” x 30” x 74 7/8” / 180 lb 1524mm x 762mm x 1902mm / 81.63 kg	$ 3860
1623BFSTD-BI	Biscuit			$ 3860
1623BFSTD-BO	Bone			$ 3860
1623BFSTD-WH	White			$ 3825

1623BFSTD - ADA COMPLIANT CONFIGURATION WITHOUT SEAT

SKU	Color	Configuration	Dimensions & Weight	MSRP
1623BFSTD-AL	Almond	Center Drain ADA Compliant Configuration without Seat	60” x 30” x 74 7/8” / 180 lb 1524mm x 762mm x 1902mm / 81.63 kg	$ 3230
1623BFSTD-BI	Biscuit			$ 3230
1623BFSTD-BO	Bone			$ 3230
1623BFSTD-WH	White			$ 3195

1623BFSTD - ANSI COMPLIANT CONFIGURATION

SKU	Color	Configuration	Dimensions & Weight	MSRP
1623BFSTD-AL	Almond	Center Drain ANSI Compliant Configuration	60” x 30” x 74 7/8” / 180 lb 1524mm x 762mm x 1902mm / 81.63 kg	$ 4046
1623BFSTD-BI	Biscuit			$ 4046
1623BFSTD-BO	Bone			$ 4046
1623BFSTD-WH	White			$ 4011

1623BFSTD - L-BAR CONFIGURATION

SKU	Color	Configuration	Dimensions & Weight	MSRP
1623BFSTD-AL	Almond	Center Drain L-Bar Configuration	60” x 30” x 74 7/8” / 180 lb 1524mm x 762mm x 1902mm / 81.63 kg	$ 2111
1623BFSTD-BI	Biscuit			$ 2111
1623BFSTD-BO	Bone			$ 2111
1623BFSTD-WH	White			$ 2076

1623BFSTD - L-BAR CONFIGURATION AND FOLDING SEAT

SKU	Color	Configuration	Dimensions & Weight	MSRP
1623BFSTD-AL	Almond	Center Drain L-Bar Configuration and Folding Seat	60” x 30” x 74 7/8” / 180 lb 1524mm x 762mm x 1902mm / 81.63 kg	$ 3000
1623BFSTD-BI	Biscuit			$ 3000
1623BFSTD-BO	Bone			$ 3000
1623BFSTD-WH	White			$ 2965

1623BFSTD - U-BAR

SKU	Color	Configuration	Dimensions & Weight	MSRP
1623BFSTD-AL	Almond	Center Drain U-Bar	60” x 30” x 74 7/8” / 180 lb 1524mm x 762mm x 1902mm / 81.63 kg	$ 2370
1623BFSTD-BI	Biscuit			$ 2370
1623BFSTD-BO	Bone			$ 2370
1623BFSTD-WH	White			$ 2335

1623BFSTDMA - ETCHED L-BAR CONFIGURATION

SKU	Color	Configuration	Dimensions & Weight	MSRP
1623BFSTDMA-AL	Almond	Center Drain Etched L-Bar Configuration	60” x 30” x 74 7/8” / 180 lb 1524mm x 762mm x 1902mm / 81.63 kg	$ 2227
1623BFSTDMA-BI	Biscuit			$ 2227
1623BFSTDMA-BO	Bone			$ 2227
1623BFSTDMA-WH	White			$ 2192

1623BFSTDMA - ETCHED L-BAR CONFIGURATION AND FOLDING SEAT

SKU	Color	Configuration	Dimensions & Weight	MSRP
1623BFSTDMA-AL	Almond	Center Drain Etched L-Bar Configuration and Folding Seat	60” x 30” x 74 7/8” / 180 lb 1524mm x 762mm x 1902mm / 81.63 kg	$ 3116
1623BFSTDMA-BI	Biscuit			$ 3116
1623BFSTDMA-BO	Bone			$ 3116
1623BFSTDMA-WH	White			$ 3081

1623BFSTDMA - MAS 521 CMR COMPLIANT CONFIGURATION

SKU	Color	Configuration	Dimensions & Weight	MSRP
1623BFSTDMA-AL	Almond	Center Drain MAS 521 CMR Compliant Configuration	60” x 30” x 74 7/8” / 180 lb 1524mm x 762mm x 1902mm / 81.63 kg	$ 3976
1623BFSTDMA-BI	Biscuit			$ 3976
1623BFSTDMA-BO	Bone			$ 3976
1623BFSTDMA-WH	White			$ 3941

OPTIONS

SKU	Description	MSRP
4200BRASDRSF	2” Brass Surefit Joint Shower Drain Brass drain material Snap in strainer-stainless steel No-caulk connection.	$ 48
7175DISH	Stainless steel soap dish	$ 119
1VAL300	Single hand chrome pressure balancing mixing valve suitable for commercial use. One-piece ceramic cartridge. Maximum temperature limit stop Installed on right wall	$ 443
1VAL300	Single hand chrome pressure balancing mixing valve suitable for commercial use. One-piece ceramic cartridge. Maximum temperature limit stop Installed on left wall	$ 443
1VAL300	Single hand chrome pressure balancing mixing valve suitable for commercial use. One-piece ceramic cartridge. Maximum temperature limit stop Installed on back wall	$ 443
1SH0107COMPLETE	Handheld shower assembly with 30 inch slide bar and 60 inch hose. Installed on right wall	$ 417
1SH0107COMPLETE	Handheld shower assembly with 30 inch slide bar and 60 inch hose. Installed on left wall	$ 417
1SH0107COMPLETE	Handheld shower assembly with 30 inch slide bar and 60 inch hose. Installed on back wall	$ 417
S72360ROD	1” diameter Stainless Steel curtain rod for 60” model	$ 101
60CURTAIN	Curtain for 60” model Shipped loose	$ 156
35RKBO	Finish repair kit - Case of 12 Available in White **(WH)**, or Bone **(BO)**,	$ 303
35RKWH		$ 303
1BAR109W	Stainless steel accessible 18 inch vertical grab bar, 1-1/4 inch diameter, concealed flanges All grab bars are factory installed and not sold separately. Available finishes: Stainless Steel**(SS)**, Powder Coated White **(W)**	$ 237
1BAR109SS		$ 186
S7126UGRAB	Package: Stainless steel accessible U-bar configuration (2) 20 inch and (1) 48 inch: 1-1/4 inch diameter, concealed flanges All grab bars are factory installed and not sold separately. Available finishes: Stainless Steel**(SS)**	$ 657
S7126HGRAB	Package: Stainless steel accessible L-bar configuration (1) 20 inch and (1) 30 inch: 1-1/4 inch diameter, concealed flanges All grab bars are factory installed and not sold separately. Available finishes: Stainless Steel**(SS)**	$ 398

OPTIONS

SKU	Description	MSRP
S7027LCUSHL	White fold-up L-shaped cushioned seat (factory installed) Installed on Left side wall	$ 889
S7027LCUSHR	White fold-up L-shaped cushioned seat (factory installed) Installed on Right side wall	$ 889
S7027PHENL	Rectgangular fold-up phenolic seat (factory installed) MASS Compliant Installed on Left side wall Available finishes: White **(WH)**, Teak**(TK)**	$ 925
S7027PHENWL		$ 925
S7027LCUSHR		$ 847
S7027PHENR	Rectgangular fold-up phenolic seat (factory installed) MASS Compliant Installed on Right side wall Available finishes: White **(WH)**, Teak**(TK)**	$ 925
S7027PHENWR		$ 925
S7030LCUSHL	White fold-up L-shaped cushioned seat (factory installed) Installed on Left side wall	$ 889

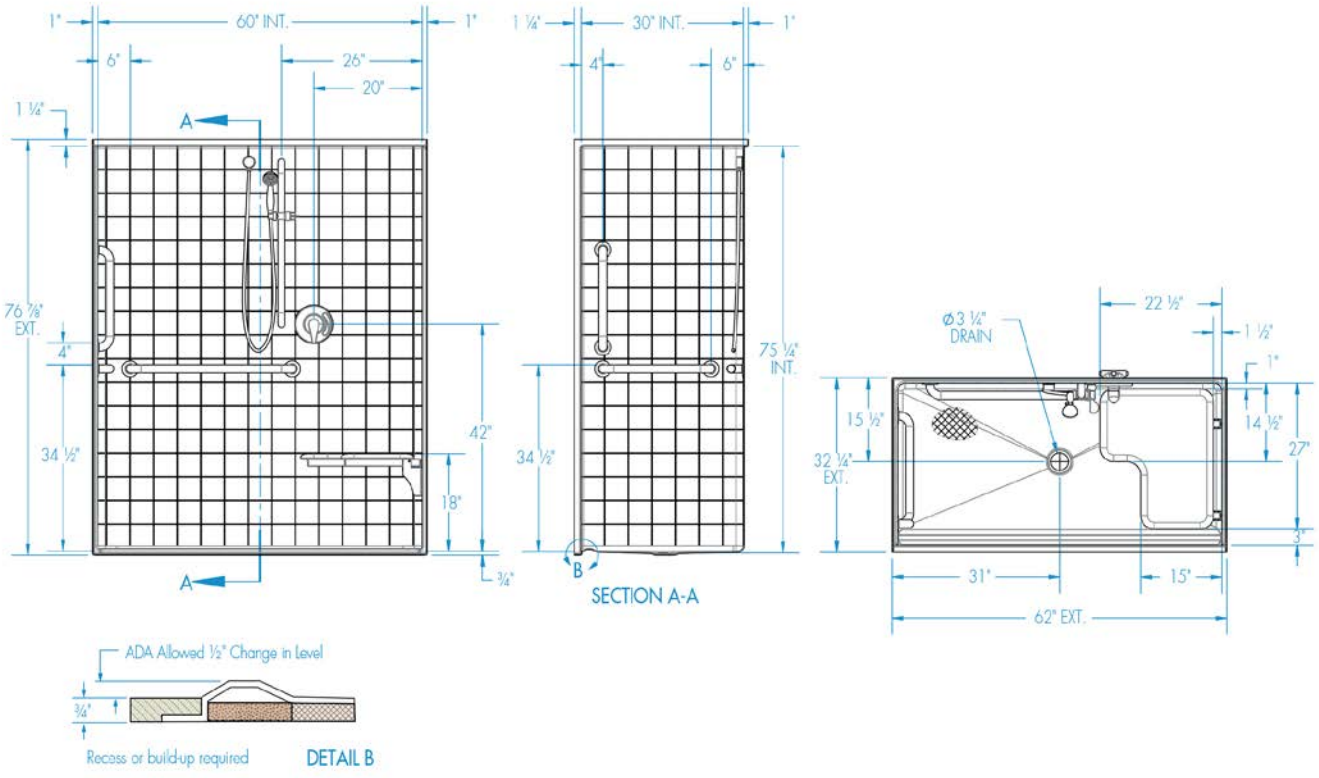
1"
60" INT.
1"
6"
26"
20"
1 ¼"
A
76 ⅞" EXT.
4"
34 ½"
42"
18"
¾"
A
1 ¼"
30" INT.
1"
4"
6"
75 ¼" INT.
34 ½"
B
SECTION A-A
Ø3 ¼" DRAIN
22 ½"
1 ½"
1"
15 ½"
14 ½"
27"
32 ¼" EXT.
3"
31"
15"
62" EXT.
ADA Allowed ½" Change in Level
¾"
Recess or build-up required
DETAIL B

1623BFSTTX





Material : AcrylX™

Features

- 1-Piece Shower
- Available in Texas only-TAS: Texas Accessibility Standard
- Pre-leveled base
- AcrylX™ applied acrylic surface
- 3/4 Inch skirt
- Barrier free when properly installed
- Slip-resistant textured floor for safety
- Smooth tile finish is easy to maintain
- Center drain
- Interior dimensions: 60 Inches x 30 Inches x 74-7/8 Inches
- Exterior dimensions: 62 Inches x 32-1/4 Inches x 76-7/8 Inches

1623BFSTTX - PRICING CATEGORY : FL

SKU	Color	Configuration	Dimensions & Weight	MSRP
1623BFSTTX-AL	Almond	Center Drain	60” x 30” x 74 7/8” / 180 lb 1524mm x 762mm x 1902mm / 81.63 kg	$ 1713
1623BFSTTX-BI	Biscuit			$ 1713
1623BFSTTX-BO	Bone			$ 1713
1623BFSTTX-WH	White			$ 1678

1623BFSTTX - L-BAR CONFIGURATION

SKU	Color	Configuration	Dimensions & Weight	MSRP
1623BFSTTX-AL	Almond	Center Drain L-Bar Configuration	60” x 30” x 74 7/8” / 180 lb 1524mm x 762mm x 1902mm / 81.63 kg	$ 2111
1623BFSTTX-BI	Biscuit			$ 2111
1623BFSTTX-BO	Bone			$ 2111
1623BFSTTX-WH	White			$ 2076

1623BFSTTX - L-BAR CONFIGURATION AND FOLDING SEAT

SKU	Color	Configuration	Dimensions & Weight	MSRP
1623BFSTTX-AL	Almond	Center Drain L-Bar Configuration and Folding Seat	60” x 30” x 74 7/8” / 180 lb 1524mm x 762mm x 1902mm / 81.63 kg	$ 3000
1623BFSTTX-BI	Biscuit			$ 3000
1623BFSTTX-BO	Bone			$ 3000
1623BFSTTX-WH	White			$ 2965

1623BFSTTX - TAS COMPLIANT CONFIGURATION

SKU	Color	Configuration	Dimensions & Weight	MSRP
1623BFSTTX-AL	Almond	Center Drain TAS Compliant Configuration	60” x 30” x 74 7/8” / 180 lb 1524mm x 762mm x 1902mm / 81.63 kg	$ 3860
1623BFSTTX-BI	Biscuit			$ 3860
1623BFSTTX-BO	Bone			$ 3860
1623BFSTTX-WH	White			$ 3825

1623BFSTTX - TAS COMPLIANT CONFIGURATION WITHOUT SEAT

SKU	Color	Configuration	Dimensions & Weight	MSRP
1623BFSTTX-AL	Almond	Center Drain TAS Compliant Configuration without Seat	60” x 30” x 74 7/8” / 180 lb 1524mm x 762mm x 1902mm / 81.63 kg	$ 3860
1623BFSTTX-BI	Biscuit			$ 3230
1623BFSTTX-BO	Bone			$ 3230
1623BFSTTX-WH	White			$ 3195

1623BFSTTX - U-BAR

SKU	Color	Configuration	Dimensions & Weight	MSRP
1623BFSTTX-AL	Almond	Center Drain U-Bar	60” x 30” x 74 7/8” / 180 lb 1524mm x 762mm x 1902mm / 81.63 kg	$ 2370
1623BFSTTX-BI	Biscuit			$ 2370
1623BFSTTX-BO	Bone			$ 2370
1623BFSTTX-WH	White			$ 2335

OPTIONS

SKU	Description	MSRP
4200BRASDRSF	2” Brass Surefit Joint Shower Drain Brass drain material Snap in strainer-stainless steel No-caulk connection.	$ 48
7175DISH	Stainless steel soap dish	$ 119
1VAL300	Single hand chrome pressure balancing mixing valve suitable for commercial use. One-piece ceramic cartridge. Maximum temperature limit stop Installed on right wall	$ 443
1VAL300	Single hand chrome pressure balancing mixing valve suitable for commercial use. One-piece ceramic cartridge. Maximum temperature limit stop Installed on left wall	$ 443
1VAL300	Single hand chrome pressure balancing mixing valve suitable for commercial use. One-piece ceramic cartridge. Maximum temperature limit stop Installed on back wall	$ 443
1SH0107COMPLETE	Handheld shower assembly with 30 inch slide bar and 60 inch hose. Installed on right wall	$ 417
1SH0107COMPLETE	Handheld shower assembly with 30 inch slide bar and 60 inch hose. Installed on left wall	$ 417
1SH0107COMPLETE	Handheld shower assembly with 30 inch slide bar and 60 inch hose. Installed on back wall	$ 417
S72360ROD	1” diameter Stainless Steel curtain rod for 60” model	$ 101
60CURTAIN	Curtain for 60” model Shipped loose	$ 156
VINYLDAM	Vinyl dam for barrier free showers. Ideal for water containment.	$ 125

OPTIONS

SKU	Description	MSRP
THRESHOLD	Removable threshold for barrier free showers. Ideal for water containment.	$ 187
35RKBO	Finish repair kit - Case of 12 Available in White **(WH)**, or Bone **(BO)**,	$ 303
35RKWH		$ 303
1BAR109W	Stainless steel accessible 18 inch vertical grab bar, 1-1/4 inch diameter, concealed flanges All grab bars are factory installed and not sold separately. Available finishes: Stainless Steel**(SS)**, Powder Coated White **(W)**	$ 237
1BAR109SS		$ 186
S7126HGRAB	Package: Stainless steel accessible L-bar configuration (1) 20 inch and (1) 30 inch: 1-1/4 inch diameter, concealed flanges All grab bars are factory installed and not sold separately. Available finishes: Stainless Steel**(SS)**	$ 398
S7027LCUSHL	White fold-up L-shaped cushioned seat (factory installed) Installed on Left side wall	$ 889
S7027LCUSHR	White fold-up L-shaped cushioned seat (factory installed) Installed on Right side wall	$ 889
S7027PHENL	Rectgangular fold-up phenolic seat (factory installed) MASS Compliant Installed on Left side wall Available finishes: White **(WH)**, Teak**(TK)**	$ 925
S7027PHENWL		$ 925
S7027LCUSHR		$ 847
S7027PHENR	Rectgangular fold-up phenolic seat (factory installed) MASS Compliant Installed on Right side wall Available finishes: White **(WH)**, Teak**(TK)**	$ 925
S7027PHENWR		$ 925
S7030LCUSHL	White fold-up L-shaped cushioned seat (factory installed) Installed on Left side wall	$ 889

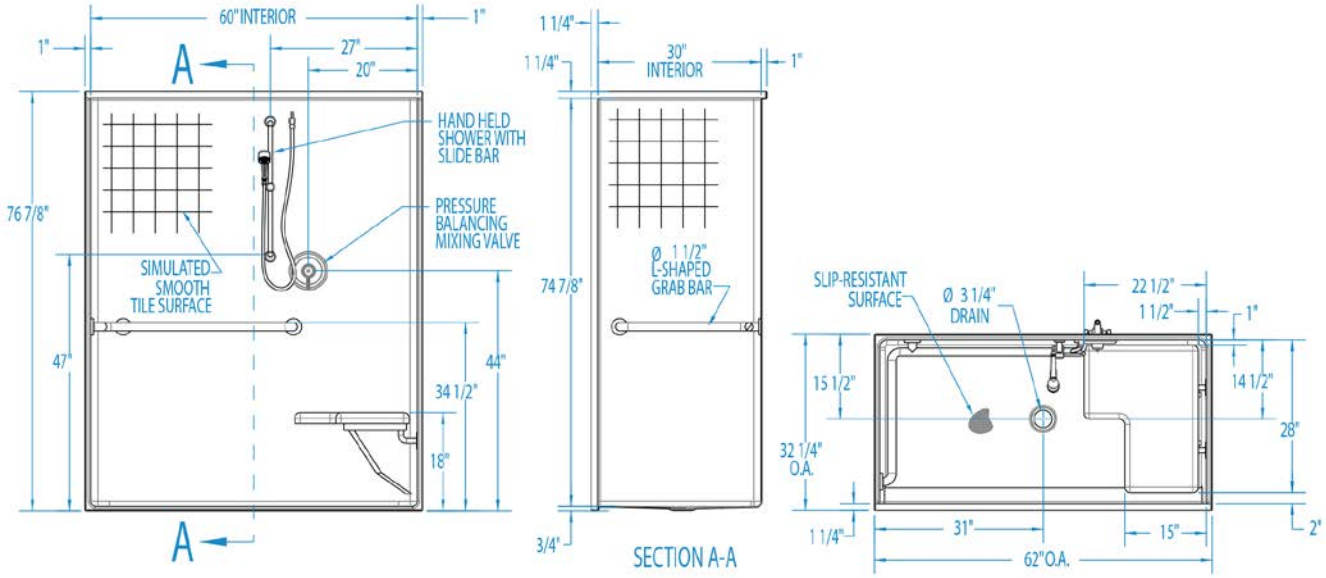
60" INTERIOR
1"
1"
A
27"
20"
HAND HELD SHOWER WITH SLIDE BAR
PRESSURE BALANCING MIXING VALVE
76 7/8"
SIMULATED SMOOTH TILE SURFACE
47"
44"
34 1/2"
18"
A
1 1/4"
1 1/4"
30" INTERIOR
1"
74 7/8"
Ø 1 1/2" L-SHAPED GRAB BAR
3/4"
SECTION A-A
SLIP-RESISTANT SURFACE
Ø 3 1/4" DRAIN
22 1/2"
1 1/2"
1"
15 1/2"
14 1/2"
28"
32 1/4" O.A.
1 1/4"
31"
15"
2"
62" O.A.

16334BFNR





Material : AcrylX™

Features

- 1-Piece Shower stall
- Available in the Pacific Northwest only
- Pre-leveled base
- AcrylX™ applied acrylic surface
- 1/4 Inch skirt
- 1/2 Inch exterior threshold
- Barrier free when properly installed
- Smooth wall is easy to clean
- Slip-resistant textured floor for safety
- Center Drain
- Interior dimensions: 60 Inches x 31-1/4 Inches x 76-5/8 Inches
- Exterior dimensions: 63 Inches x 34 Inches x 78-1/8 Inches

16334BFNR - PRICING CATEGORY : FL

SKU	Color	Configuration	Dimensions & Weight	MSRP
16334BFNR-AL	Almond	Center Drain	60” x 31” x 76 5/8” / 202 lb 1524mm x 787mm x 1946mm / 91.61 kg	$ 2003
16334BFNR-BI	Biscuit			$ 2003
16334BFNR-BO	Bone			$ 2003
16334BFNR-WH	White			$ 1968

16334BFNR - ADA COMPLIANT CONFIGURATION

SKU	Color	Configuration	Dimensions & Weight	MSRP
16334BFNR-AL	Almond	Center Drain ADA Compliant Configuration	60” x 31” x 76 5/8” / 202 lb 1524mm x 787mm x 1946mm / 91.61 kg	$ 4172
16334BFNR-BI	Biscuit			$ 4172
16334BFNR-BO	Bone			$ 4172
16334BFNR-WH	White			$ 4137

16334BFNR - ADA COMPLIANT CONFIGURATION WITHOUT SEAT

SKU	Color	Configuration	Dimensions & Weight	MSRP
16334BFNR-AL	Almond	Center Drain ADA Compliant Configuration without Seat	60” x 31” x 76 5/8” / 202 lb 1524mm x 787mm x 1946mm / 91.61 kg	$ 3564
16334BFNR-BI	Biscuit			$ 3564
16334BFNR-BO	Bone			$ 3564
16334BFNR-WH	White			$ 3529

16334BFNR - ANSI COMPLIANT CONFIGURATION

SKU	Color	Configuration	Dimensions & Weight	MSRP
160334BFNR-AL	Almond	Center Drain ANSI Compliant Configuration	60” x 31” x 76 5/8” / 202 lb 1524mm x 787mm x 1946mm / 91.61 kg	$ 4358
160334BFNR-WH	White			$ 4323
16334BFNR-AL	Almond			$ 4172
16334BFNR-BI	Biscuit			$ 4358
16334BFNR-BO	Bone			$ 4358
16334BFNR-WH	White			$ 4323

16334BFNR - L-BAR CONFIGURATION

SKU	Color	Configuration	Dimensions & Weight	MSRP
16334BFNR-AL	Almond	Center Drain L-Bar Configuration	60” x 31” x 76 5/8” / 202 lb 1524mm x 787mm x 1946mm / 91.61 kg	$ 2423
16334BFNR-BI	Biscuit			$ 2423
16334BFNR-BO	Bone			$ 2423
16334BFNR-WH	White			$ 2388

16334BFNR - L-BAR CONFIGURATION AND FOLDING SEAT

SKU	Color	Configuration	Dimensions & Weight	MSRP
16334BFNR-AL	Almond	Center Drain L-Bar Configuration and Folding Seat	60” x 31” x 76 5/8” / 202 lb 1524mm x 787mm x 1946mm / 91.61 kg	$ 3312
16334BFNR-BI	Biscuit			$ 3312
16334BFNR-BO	Bone			$ 3312
16334BFNR-WH	White			$ 3277

16334BFNR - U-BAR

SKU	Color	Configuration	Dimensions & Weight	MSRP
16334BFNR-AL	Almond	Center Drain U-Bar	60” x 31” x 76 5/8” / 202 lb 1524mm x 787mm x 1946mm / 91.61 kg	$ 2704
16334BFNR-BI	Biscuit			$ 2704
16334BFNR-BO	Bone			$ 2704
16334BFNR-WH	White			$ 2669

OPTIONS

SKU	Description	MSRP
4200BRASDRSF	2” Brass Surefit Joint Shower Drain Brass drain material Snap in strainer-stainless steel No-caulk connection.	$ 48
7175DISH	Stainless steel soap dish	$ 119
1VAL300	Single hand chrome pressure balancing mixing valve suitable for commercial use. One-piece ceramic cartridge. Maximum temperature limit stop Installed on right wall	$ 443

OPTIONS

SKU	Description	MSRP
1VAL300	Single hand chrome pressure balancing mixing valve suitable for commercial use. One-piece ceramic cartridge. Maximum temperature limit stop Installed on left wall	$ 443
1VAL300	Single hand chrome pressure balancing mixing valve suitable for commercial use. One-piece ceramic cartridge. Maximum temperature limit stop Installed on back wall	$ 443
1SH0107COMPLETE	Handheld shower assembly with 30 inch slide bar and 60 inch hose. Installed on right wall	$ 417
1SH0107COMPLETE	Handheld shower assembly with 30 inch slide bar and 60 inch hose. Installed on left wall	$ 417
1SH0107COMPLETE	Handheld shower assembly with 30 inch slide bar and 60 inch hose. Installed on back wall	$ 417
S72360ROD	1” diameter Stainless Steel curtain rod for 60” model	$ 101
60CURTAIN	Curtain for 60” model Shipped loose	$ 156
THRESHOLD	Removable threshold for barrier free showers. Ideal for water containment.	$ 187
35RKBO	Finish repair kit - Case of 12 Available in White **(WH)**, or Bone **(BO)**,	$ 303
35RKWH		$ 303
1BAR109W	Stainless steel accessible 18 inch vertical grab bar, 1-1/4 inch diameter, concealed flanges All grab bars are factory installed and not sold separately. Available finishes: Stainless Steel**(SS)**, Powder Coated White **(W)**	$ 237
1BAR109SS		$ 186
S7160UGRAB	Package: Stainless steel accessible U-bar configuration (2) 24 inch and (1) 48 inch: 1-1/4 inch diameter, concealed flanges All grab bars are factory installed and not sold separately. Available finishes: Stainless Steel**(SS)**	$ 701
S1603GBARST	Package: Stainless steel accessible L-bar configuration (1) 24 inch and (1) 30 inch: 1-1/4 inch diameter, concealed flanges All grab bars are factory installed and not sold separately. Available finishes: Stainless Steel**(SS)**	$ 420
S7030LCUSHL	White fold-up L-shaped cushioned seat (factory installed) Installed on Left side wall	$ 889
S7030LCUSHR	White fold-up L-shaped cushioned seat (factory installed) Installed on Right side wall	$ 889
S7030PHENL	Rectgangular fold-up phenolic seat (factory installed) Installed on Left side wall Available finishes: White **(WH)**, Teak**(TK)**	$ 925
S7030PHENWL		$ 925
S7030PHENWR	Rectgangular fold-up phenolic seat (factory installed) Installed on Right side wall Available finishes: White **(WH)**, Teak**(TK)**	$ 925
S7030PHENR		$ 925

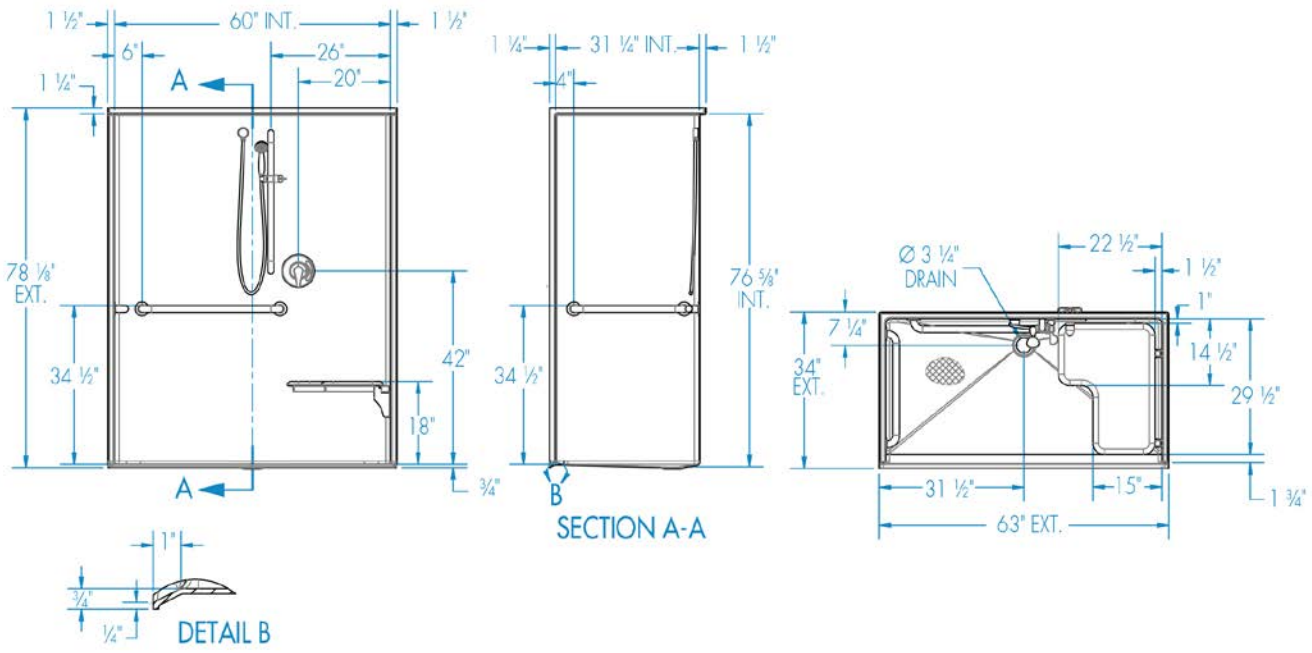
1 ½"
60" INT.
1 ½"
6"
26"
20"
1 ¼"
A
78 ⅛"
EXT.
34 ½"
42"
18"
¾"
A
1 ¼"
31 ¼" INT.
1 ½"
4"
76 ⅝"
INT.
34 ½"
B
SECTION A-A
Ø 3 ¼"
DRAIN
22 ½"
1 ½"
1"
7 ¼"
34"
EXT.
14 ½"
29 ½"
31 ½"
15"
1 ¾"
63" EXT.
1"
¾"
¼"
DETAIL B

3636BFS



Material : Premium Cast Acrylic

Features

- 1-Piece Shower module
- 1-3/4 Inch skirt
- 1/2 Inch interior threshold
- Barrier free when properly installed
- Smooth
- Center drain
- Slip-resistant textured floor for safety
- Molded toiletry shelf
- Unit handed by fixture wall unless seat is installed
- Integral dome
- Premium cast acrylic surface
- Interior dimensions: 36 Inches x 36 Inches x 80-7/16 Inches
- Exterior dimension: 41 Inches x 37 Inches x 83-3/4 Inches

3636BFS - PRICING CATEGORY : FL

SKU	Color	Configuration	Dimensions & Weight	MSRP
3636BFSL-BI	Biscuit	Base model, Left Hand Fixture Wall with no Accessories, Center Drain	36” x 36” x 80.438” / 172 lb 914mm x 914mm x 2043mm / 78.0 kg	$ 2500
3636BFSL-WH	White			$ 2465
3636BFSR-BI	Biscuit	Base model, Right Hand Fixture Wall with no Accessories, Center Drain		$ 2500
3636BFSR-WH	White			$ 2465

3636BFS - ADA COMPLIANT CONFIGURATION

SKU	Color	Configuration	Dimensions & Weight	MSRP
3636BFSR-BI	Biscuit	Center Drain ADA Compliant Configuration	36” x 36” x 80.438” / 172 lb 914mm x 914mm x 2043mm / 78.0 kg	$ 4590
3636BFSR-WH	White			$ 4555

3636BFS - ANSI COMPLIANT CONFIGURATION

SKU	Color	Configuration	Dimensions & Weight	MSRP
3636BFSL-BI	Biscuit	Center Drain ANSI Compliant Configuration	36” x 36” x 80.438” / 172 lb 914mm x 914mm x 2043mm / 78.0 kg	$ 4776
3636BFSL-WH	White			$ 4741
3636BFSR-BI	Biscuit			$ 4776
3636BFSR-WH	White			$ 4741

3636BFS - L-BAR CONFIGURATION AND FOLDING SEAT

SKU	Color	Configuration	Dimensions & Weight	MSRP
3636BFSL-BI	Biscuit	Center Drain L-Bar Configuration and Folding Seat	36” x 36” x 80.438” / 172 lb 914mm x 914mm x 2043mm / 78.0 kg	$ 3730
3636BFSL-WH	White			$ 3695
3636BFSR-BI	Biscuit			$ 3730
3636BFSR-WH	White			$ 3695

3636BFSMA - ETCHED L-BAR CONFIGURATION

SKU	Color	Configuration	Dimensions & Weight	MSRP
3636BFSMAL-BI	Biscuit	Center Drain Etched L-Bar Configuration	36” x 36” x 80.438” / 172 lb 914mm x 914mm x 2043mm / 78.0 kg	$ 3085
3636BFSMAL-WH	White			$ 3050
3636BFSMAR-BI	Biscuit			$ 3085
3636BFSMAR-WH	White			$ 3085

3636BFSMA - ETCHED L-BAR CONFIGURATION AND FOLDING SEAT

SKU	Color	Configuration	Dimensions & Weight	MSRP
3636BFSMAL-BI	Biscuit	Center Drain Etched L-Bar Configuration and Folding Seat	36” x 36” x 80.438” / 172 lb 914mm x 914mm x 2043mm / 78.0 kg	$ 3974
3636BFSMAL-WH	White			$ 3939
3636BFSMAR-BI	Biscuit			$ 3974
3636BFSMAR-WH	White			$ 3974

3636BFSMA - MAS 521 CMR COMPLIANT CONFIGURATION

SKU	Color	Configuration	Dimensions & Weight	MSRP
3636BFSMAL-BI	Biscuit	Center Drain MAS 521 CMR Compliant Configuration	36” x 36” x 80.438” / 172 lb 914mm x 914mm x 2043mm / 78.0 kg	$ 3974
3636BFSMAL-WH	White			$ 3939
3636BFSMAR-BI	Biscuit			$ 4834
3636BFSMAR-WH	White			$ 4799

OPTIONS

SKU	Description	MSRP
4200BRASDRSF	2” Brass Surefit Joint Shower Drain Brass drain material Snap in strainer-stainless steel No-caulk connection.	$ 48
DLN2	Ships ready to install 277 Volt for commercial applications	$ 228
DLN1	Ships ready to install - 120 Volt	$ 228
1VAL300	Single hand chrome pressure balancing mixing valve suitable for commercial use. One-piece ceramic cartridge. Maximum temperature limit stop Installed on right wall	$ 443
1VAL300	Single hand chrome pressure balancing mixing valve suitable for commercial use. One-piece ceramic cartridge. Maximum temperature limit stop Installed on left wall	$ 443

OPTIONS

SKU	Description	MSRP
1SH0107COMPLETE	Handheld shower assembly with 30 inch slide bar and 60 inch hose. Installed on right wall	$ 417
1SH0107COMPLETE	Handheld shower assembly with 30 inch slide bar and 60 inch hose. Installed on left wall	$ 417
S7336ROD	1” diameter Stainless Steel curtain rod	$ 76
36CURTAIN	Curtain for 36” model Shipped loose	$ 101
1BAR109W	Stainless steel accessible 18 inch vertical grab bar, 1-1/4 inch diameter, concealed flanges All grab bars are factory installed and not sold separately. Available finishes: Stainless Steel**(SS)**, Powder Coated White **(W)**	$ 237
1BAR109SS		$ 186
S7036LCUSHAL	White fold-up L-shaped cushioned seat (factory installed) Installed on Left side wall	$ 889
S7036LCUSHAR	White fold-up L-shaped cushioned seat (factory installed) Installed on Right side wall	$ 847
S7036LPHENAWL	Rectgangular fold-up phenolic seat (factory installed) MASS Compliant Installed on Left side wall Available finishes: White **(WH)**, Teak**(TK)**	$ 925
S7036LPHENAL		$ 925
S7030PHENAWR	Rectgangular fold-up phenolic seat (factory installed) MASS Compliant Installed on Right side wall Available finishes: White **(WH)**, Teak**(TK)**	$ 925
S7030PHENAR		$ 925
7175DISH	Stainless steel soap dish	$ 119

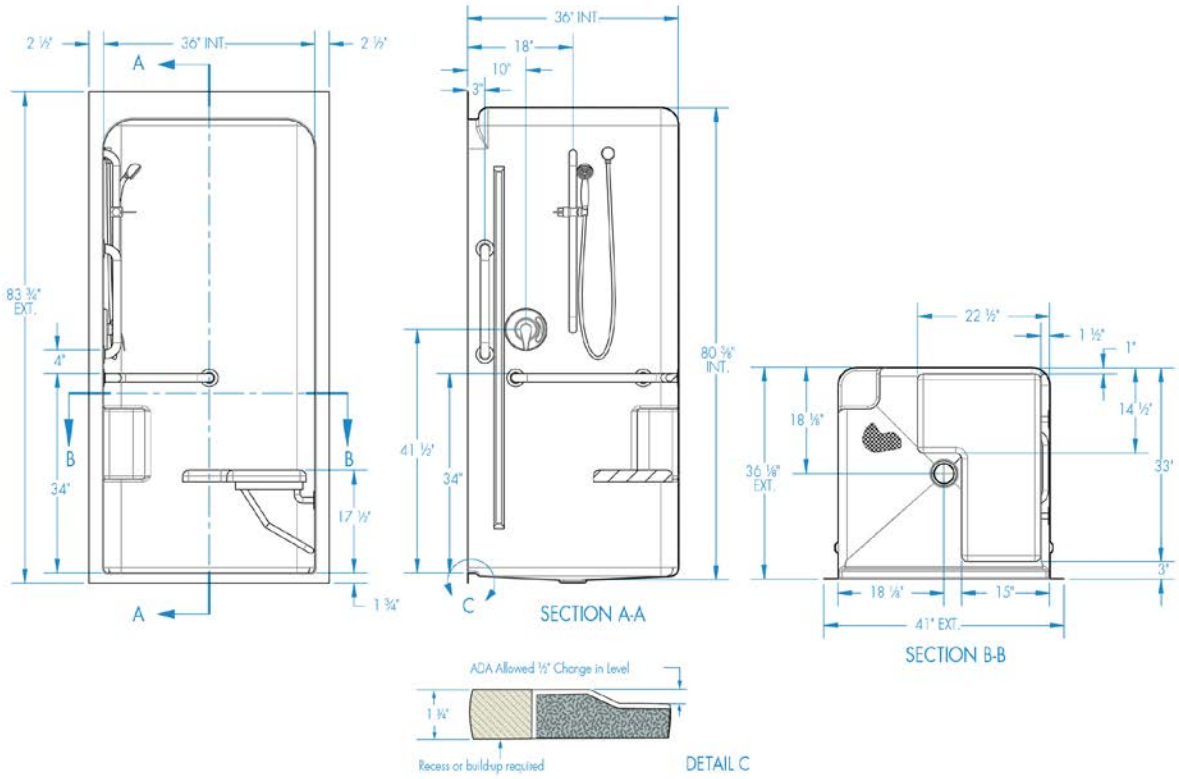
2 ½"
36" INT.
2 ½"
A
83 ¾" EXT.
4"
B
34"
B
17 ½"
1 ¾"
A
36" INT.
18"
10"
3"
41 ½"
34"
80 ⅝" INT.
C
SECTION A-A
22 ½"
1 ½"
1"
14 ½"
18 ⅛"
36 ⅛" EXT.
33"
3"
18 ⅛"
15"
41" EXT.
SECTION B-B
ADA Allowed ½" Change in Level
1 ¼"
Recess or buildup required
DETAIL C

3636BFSC



Material : Premium Cast Acrylic

Features

- 1-Piece Shower module
- 1 Inch skirt
- No interior threshold
- Barrier free when properly installed
- Smooth wall is easy to clean
- Center drain
- Slip-resistant textured floor for safety
- Molded toiletry shelf
- Unit is handed by fixture wall unless seat is installed
- Integral dome
- Premium cast acrylic surface
- LH fixture wall

3636BFSC - PRICING CATEGORY : FL

SKU	Color	Configuration	Dimensions & Weight	MSRP
3636BFSCL-BI	Biscuit	Base model, Left Hand Fixture Wall with no Accessories, Center Drain	36” x 36” x 80.438” / 172 lb 914mm x 914mm x 2043mm / 78.0 kg	$ 2500
3636BFSCL-WH	White			$ 2465
3636BFSCR-BI	Biscuit	Base model, Right Hand Fixture Wall with no Accessories, Center Drain		$ 2500
3636BFSCR-WH	White			$ 2465

3636BFSC - ADA COMPLIANT CONFIGURATION

SKU	Color	Configuration	Dimensions & Weight	MSRP
3636BFSCL-BI	Biscuit	Center Drain ADA Compliant Configuration	36” x 36” x 80.438” / 172 lb 914mm x 914mm x 2043mm / 78.0 kg	$ 4590
3636BFSCL-WH	White			$ 4555
3636BFSCR-BI	Biscuit			$ 4590
3636BFSCR-WH	White			$ 4555

3636BFSC - ANSI COMPLIANT CONFIGURATION

SKU	Color	Configuration	Dimensions & Weight	MSRP
3636BFSCL-BI	Biscuit	Center Drain ANSI Compliant Configuration	36” x 36” x 80.438” / 172 lb 914mm x 914mm x 2043mm / 78.0 kg	$ 4776
3636BFSCL-WH	White			$ 4741
3636BFSCR-BI	Biscuit			$ 4776
3636BFSCR-WH	White			$ 4741

3636BFSC - L-BAR CONFIGURATION AND FOLDING SEAT

SKU	Color	Configuration	Dimensions & Weight	MSRP
3636BFSCL-BI	Biscuit	Center Drain L-Bar Configuration and Folding Seat	36” x 36” x 80.438” / 172 lb 914mm x 914mm x 2043mm / 78.0 kg	$ 3730
3636BFSCL-WH	White			$ 3695
3636BFSCR-BI	Biscuit			$ 3730
3636BFSCR-WH	White			$ 3695

3636BFSCMA - ETCHED L-BAR CONFIGURATION

SKU	Color	Configuration	Dimensions & Weight	MSRP
3636BFSCMAL-BI	Biscuit	Center Drain Etched L-Bar Configuration	36” x 36” x 80.438” / 172 lb 914mm x 914mm x 2043mm / 78.0 kg	$ 3085
3636BFSCMAL-WH	White			$ 3050
3636BFSCMAR-BI	Biscuit			$ 3085
3636BFSCMAR-WH	White			$ 3050

3636BFSCMA - ETCHED L-BAR CONFIGURATION AND FOLDING SEAT

SKU	Color	Configuration	Dimensions & Weight	MSRP
3636BFSCMAL-BI	Biscuit	Center Drain Etched L-Bar Configuration and Folding Seat	36” x 36” x 80.438” / 172 lb 914mm x 914mm x 2043mm / 78.0 kg	$ 3974
3636BFSCMAL-WH	White			$ 3939
3636BFSCMAR-BI	Biscuit			$ 3974
3636BFSCMAR-WH	White			$ 3939

3636BFSCMA - MAS 521 CMR COMPLIANT CONFIGURATION

SKU	Color	Configuration	Dimensions & Weight	MSRP
3636BFSCMAL-BI	Biscuit	Center Drain MAS 521 CMR Compliant Configuration	36” x 36” x 80.438” / 172 lb 914mm x 914mm x 2043mm / 78.0 kg	$ 4834
3636BFSCMAL-WH	White			$ 4799
3636BFSCMAR-BI	Biscuit			$ 4834
3636BFSCMAR-WH	White			$ 4799

OPTIONS

SKU	Description	MSRP
4200BRASDRSF	2” Brass Surefit Joint Shower Drain Brass drain material Snap in strainer-stainless steel No-caulk connection.	$ 48
DLN2	Ships ready to install 277 Volt for commercial applications	$ 228
DLN1	Ships ready to install - 120 Volt	$ 228
1VAL300	Single hand chrome pressure balancing mixing valve suitable for commercial use. One-piece ceramic cartridge. Maximum temperature limit stop Installed on right wall	$ 443
1VAL300	Single hand chrome pressure balancing mixing valve suitable for commercial use. One-piece ceramic cartridge. Maximum temperature limit stop Installed on left wall	$ 443

OPTIONS

SKU	Description	MSRP
1SH0107COMPLETE	Handheld shower assembly with 30 inch slide bar and 60 inch hose. Installed on right wall	$ 417
1SH0107COMPLETE	Handheld shower assembly with 30 inch slide bar and 60 inch hose. Installed on left wall	$ 417
S7336ROD	1” diameter Stainless Steel curtain rod	$ 76
36CURTAIN	Curtain for 36” model Shipped loose	$ 101
1BAR109W	Stainless steel accessible 18 inch vertical grab bar, 1-1/4 inch diameter, concealed flanges All grab bars are factory installed and not sold separately. Available finishes: Stainless Steel**(SS)**, Powder Coated White **(W)**	$ 237
1BAR109SS		$ 186
S7036LCUSHAL	White fold-up L-shaped cushioned seat (factory installed) Installed on Left side wall	$ 889
S7036LCUSHAR	White fold-up L-shaped cushioned seat (factory installed) Installed on Right side wall	$ 847
S7036LPHENAWL	Rectgangular fold-up phenolic seat (factory installed) MASS Compliant Installed on Left side wall Available finishes: White **(WH)**, Teak**(TK)**	$ 925
S7036LPHENAL		$ 925
S7030PHENAWR	Rectgangular fold-up phenolic seat (factory installed) MASS Compliant Installed on Right side wall Available finishes: White **(WH)**, Teak**(TK)**	$ 925
S7030PHENAR		$ 925
7175DISH	Stainless steel soap dish	$ 119

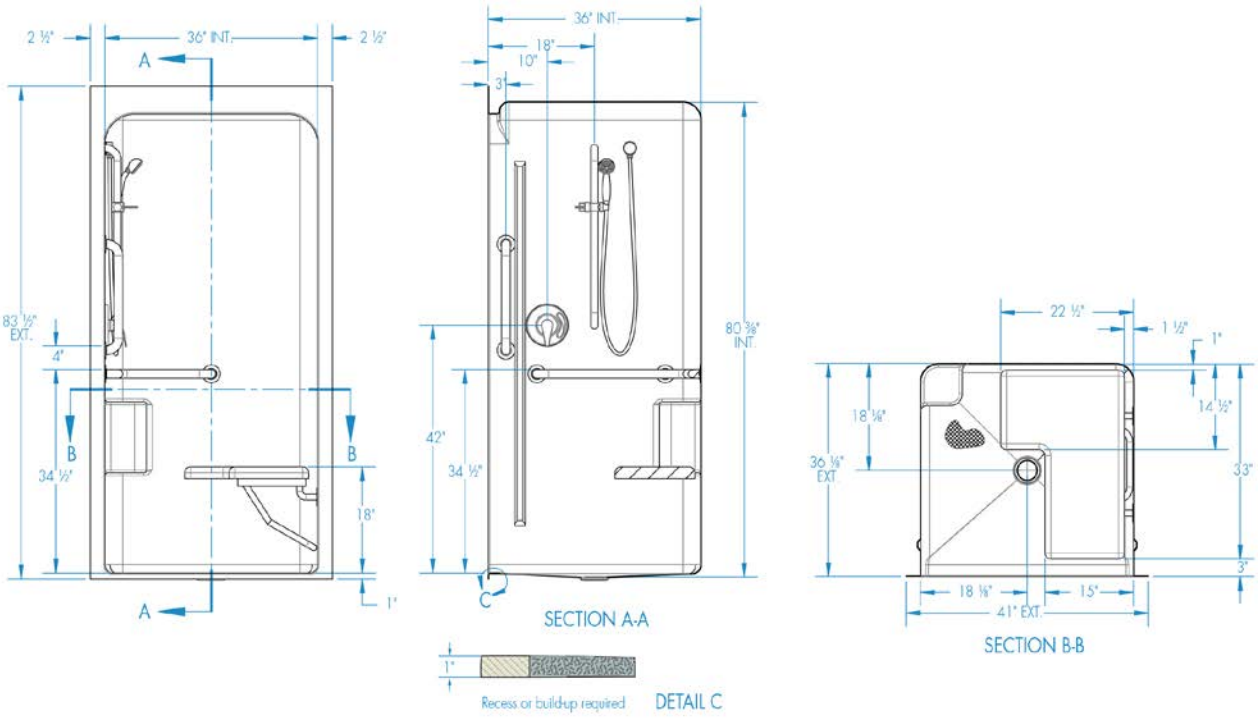
2 ½"
36" INT.
2 ½"
A
83 ½" EXT.
4"
B
34 ½"
B
18"
1"
A
36" INT.
18"
10"
3"
80 ⅜" INT.
42"
34 ½"
C
SECTION A-A
1"
Recess or build-up required
DETAIL C
22 ½"
1 ½"
1"
14 ½"
18 ⅛"
36 ⅛" EXT.
33"
3"
18 ⅛"
1.5"
41" EXT.
SECTION B-B

4836BFS





Material : Premium Cast Acrylic

Features

- 1-Piece Shower
- East zone only
- 2 Inch skirt
- 1/2 Inch interior threshold
- Smooth wall is easy to clean
- Center rear drain
- Slip-resistant textured floor for safety
- Molded toiletry shelves
- Integral dome
- Premium cast acrylic surface
- Interior dimensions: 48-1/2 Inches x 36 Inches x 81-5/16 Inches
- Exterior dimensions: 53 Inches x 37 Inches x 84 Inches

4836BFS - PRICING CATEGORY : FL

SKU	Color	Configuration	Dimensions & Weight	MSRP
4836BFS-BI	Biscuit	Center Drain	48” x 36” x 81.313” / 170 lb 1219mm x 914mm x 2065mm / 77.1 kg	$ 2500
4836BFS-WH	White			$ 2465

4836BFS - L-BAR CONFIGURATION AND FOLDING SEAT

SKU	Color	Configuration	Dimensions & Weight	MSRP
4836BFS-BI	Biscuit	Center Drain L-Bar Configuration and Folding Seat	48” x 36” x 81.313” / 170 lb 1219mm x 914mm x 2065mm / 77.1 kg	$ 3860
4836BFS-WH	White			$ 3825

4836BFS - U-BAR

SKU	Color	Configuration	Dimensions & Weight	MSRP
4836BFS-BI	Biscuit	Center Drain U-Bar	48” x 36” x 81.313” / 170 lb 1219mm x 914mm x 2065mm / 77.1 kg	$ 3095
4836BFS-WH	White			$ 3060

OPTIONS

SKU	Description	MSRP
4200BRASDRSF	2” Brass Surefit Joint Shower Drain Brass drain material Snap in strainer-stainless steel No-caulk connection.	$ 48
DLN2	Ships ready to install 277 Volt for commercial applications	$ 228

OPTIONS

SKU	Description	MSRP
DLN1	Ships ready to install - 120 Volt	$ 228
1VAL300	Single hand chrome pressure balancing mixing valve suitable for commercial use. One-piece ceramic cartridge. Maximum temperature limit stop Installed on right wall	$ 443
1VAL300	Single hand chrome pressure balancing mixing valve suitable for commercial use. One-piece ceramic cartridge. Maximum temperature limit stop Installed on left wall	$ 443
1VAL300	Single hand chrome pressure balancing mixing valve suitable for commercial use. One-piece ceramic cartridge. Maximum temperature limit stop Installed on back wall	$ 443
1SH0107COMPLETE	Handheld shower assembly with 30 inch slide bar and 60 inch hose. Installed on right wall	$ 417
1SH0107COMPLETE	Handheld shower assembly with 30 inch slide bar and 60 inch hose. Installed on left wall	$ 417
1SH0107COMPLETE	Handheld shower assembly with 30 inch slide bar and 60 inch hose. Installed on back wall	$ 417
S7348ROD	1” diameter Stainless Steel curtain rod	$ 89
48CURTAIN	Curtain for 48” model Shipped loose	$ 119
FLAT36RT	Extra reinforcement for after market accessories installment Order per wall Reinforcement is applied to flat surface areas.	$ 84
S7033SEATL	White fold-up single cushioned seat (factory installed) Installed on Left side wall	$ 801
S7033SEATLR	White fold-up single cushioned seat (factory installed) Installed on Right side wall	$ 801
S7033PHENL	Solid fold-up phenolic seat with slats for drainage (factory installed) Installed on Left side wall Available finishes: White **(WH)**, Teak**(TK)**	$ 1120
S7033PHENWL		$ 1120
S7033PHENWR	Solid fold-up phenolic seat with slats for drainage (factory installed) Installed on Right side wall Available finishes: White **(WH)**, Teak**(TK)**	$ 1120
S7033PHENR		$ 1120

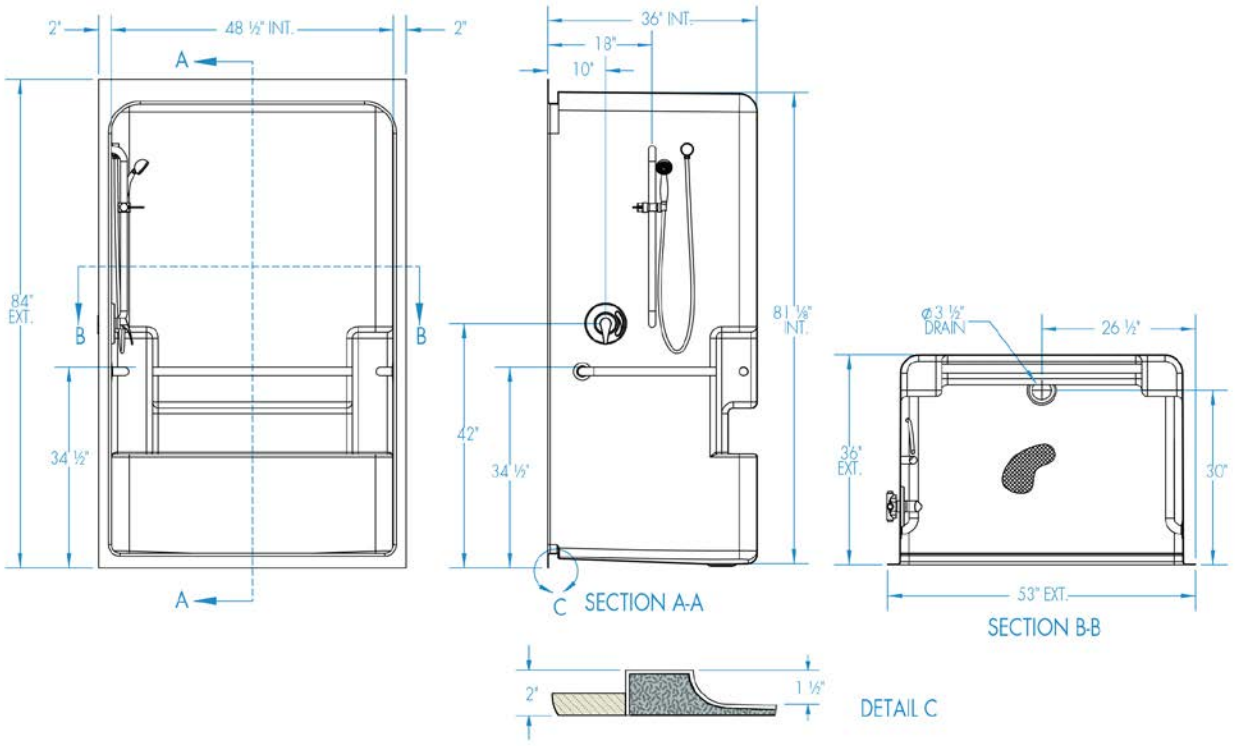
2"
48 ½" INT.
2"
A
84" EXT.
B
B
34 ½"
A
36" INT.
18"
10"
81 ⅛" INT.
42"
34 ½"
C
SECTION A-A
Ø3 ½" DRAIN
26 ½"
36" EXT.
30"
53" EXT.
SECTION B-B
2"
1 ½"
DETAIL C

6030BFSC



Material : Premium Cast Acrylic

Features

- 1-Piece Shower
- 1 Inch skirt
- No interior threshold
- Barrier free when properly installed
- Smooth wall is easy to clean
- Center drain
- Slip-resistant textured floor for safety
- Integral dome
- Premium cast acrylic surface
- Interior dimensions: 60 Inches x 30 Inches x 78-3/4 Inches
- Exterior dimensions: 65 Inches x 31 Inches x 83-1/2 Inches

6030BFSC - PRICING CATEGORY : FL

SKU	Color	Configuration	Dimensions & Weight	MSRP
6030BFSC-BI	Biscuit	Center Drain	60” x 30” x 78 3/4” / 206 lb 1524mm x 762mm x 2000mm / 93.42 kg	$ 2890
6030BFSC-WH	White			$ 2855

6030BFSC - ADA COMPLIANT CONFIGURATION

SKU	Color	Configuration	Dimensions & Weight	MSRP
6030BFSC-BI	Biscuit	Center Drain ADA Compliant Configuration	60” x 30” x 78 3/4” / 206 lb 1524mm x 762mm x 2000mm / 93.42 kg	$ 5019
6030BFSC-WH	White			$ 4984

6030BFSC - ADA COMPLIANT CONFIGURATION WITHOUT SEAT

SKU	Color	Configuration	Dimensions & Weight	MSRP
6030BFSC-BI	Biscuit	Center Drain ADA Compliant Configuration without Seat	60” x 30” x 78 3/4” / 206 lb 1524mm x 762mm x 2000mm / 93.42 kg	$ 4371
6030BFSC-WH	White			$ 4336

6030BFSC - ANSI COMPLIANT CONFIGURATION

SKU	Color	Configuration	Dimensions & Weight	MSRP
6030BFSC-BI	Biscuit	Center Drain ANSI Compliant Configuration	60” x 30” x 78 3/4” / 206 lb 1524mm x 762mm x 2000mm / 93.42 kg	$ 5205
6030BFSC-WH	White			$ 5170

6030BFSC - L-BAR CONFIGURATION

SKU	Color	Configuration	Dimensions & Weight	MSRP
6030BFSC-BI	Biscuit	Center Drain L-Bar Configuration	60” x 30” x 78 3/4” / 206 lb 1524mm x 762mm x 2000mm / 93.42 kg	$ 3270
6030BFSC-WH	White			$ 3235

6030BFSC - L-BAR CONFIGURATION AND FOLDING SEAT

SKU	Color	Configuration	Dimensions & Weight	MSRP
6030BFSC-BI	Biscuit	Center Drain L-Bar Configuration and Folding Seat	60” x 30” x 78 3/4” / 206 lb 1524mm x 762mm x 2000mm / 93.42 kg	$ 4159

6030BFSC - U-BAR

SKU	Color	Configuration	Dimensions & Weight	MSRP
6030BFSC-BI	Biscuit	Center Drain U-Bar	60” x 30” x 78 3/4” / 206 lb 1524mm x 762mm x 2000mm / 93.42 kg	$ 3511
6030BFSC-WH	White			$ 3476

6030BFSCMA - ETCHED L-BAR CONFIGURATION

SKU	Color	Configuration	Dimensions & Weight	MSRP
6030BFSCMA-BI	Biscuit	Center Drain Etched L-Bar Configuration	60” x 30” x 78 3/4” / 206 lb 1524mm x 762mm x 2000mm / 93.42 kg	$ 3374
6030BFSCMA-WH	White			$ 3339

6030BFSCMA - ETCHED L-BAR CONFIGURATION AND FOLDING SEAT

SKU	Color	Configuration	Dimensions & Weight	MSRP
6030BFSCMA-BI	Biscuit	Center Drain Etched L-Bar Configuration and Folding Seat	60” x 30” x 78 3/4” / 206 lb 1524mm x 762mm x 2000mm / 93.42 kg	$ 4263
6030BFSCMA-WH	White			$ 4228

6030BFSCMA - MAS 521 CMR COMPLIANT CONFIGURATION

SKU	Color	Configuration	Dimensions & Weight	MSRP
6030BFSCMA-BI	Biscuit	Center Drain MAS 521 CMR Compliant Configuration	60” x 30” x 78 3/4” / 206 lb 1524mm x 762mm x 2000mm / 93.42 kg	$ 5123
6030BFSCMA-WH	White			$ 5088

OPTIONS

SKU	Description	MSRP
4200BRASDRSF	2” Brass Surefit Joint Shower Drain Brass drain material Snap in strainer-stainless steel No-caulk connection.	$ 48
DLN2	Ships ready to install 277 Volt for commercial applications	$ 228
DLN1	Ships ready to install - 120 Volt	$ 228
7175DISH	Stainless steel soap dish	$ 119

OPTIONS

SKU	Description	MSRP
1VAL300	Single hand chrome pressure balancing mixing valve suitable for commercial use. One-piece ceramic cartridge. Maximum temperature limit stop Installed on right wall	$ 443
1VAL300	Single hand chrome pressure balancing mixing valve suitable for commercial use. One-piece ceramic cartridge. Maximum temperature limit stop Installed on left wall	$ 443
1VAL300	Single hand chrome pressure balancing mixing valve suitable for commercial use. One-piece ceramic cartridge. Maximum temperature limit stop Installed on back wall	$ 443
1SH0107COMPLETE	Handheld shower assembly with 30 inch slide bar and 60 inch hose. Installed on right wall	$ 417
1SH0107COMPLETE	Handheld shower assembly with 30 inch slide bar and 60 inch hose. Installed on left wall	$ 417
1SH0107COMPLETE	Handheld shower assembly with 30 inch slide bar and 60 inch hose. Installed on back wall	$ 417
S72360ROD	1” diameter Stainless Steel curtain rod for 60” model	$ 101
60CURTAIN	Curtain for 60” model Shipped loose	$ 156
VINYLDAM	Vinyl dam for barrier free showers. Ideal for water containment.	$ 125
THRESHOLD	Removable threshold for barrier free showers. Ideal for water containment.	$ 187
S7123UGRABST	Package: Stainless steel accessible U-bar configuration (2) 18 inch and (1) 48 inch: 1-1/4 inch diameter, concealed flanges All grab bars are factory installed and not sold separately. Available finishes: Stainless Steel**(SS)**	$ 621
S7123HGRABST	Package: Stainless steel accessible L-bar configuration (1) 18 inch and (1) 30 inch: 1-1/4 inch diameter, concealed flanges All grab bars are factory installed and not sold separately. Available finishes: Stainless Steel**(SS)**	$ 380
S7027LCUSHAL	White fold-up L-shaped cushioned seat (factory installed) Installed on Left side wall	$ 889
S7027LCUSHAR	White fold-up L-shaped cushioned seat (factory installed) Installed on Right side wall	$ 889
S7027LPHENAWHL	Solid fold-up phenolic seat with slats for drainage (factory installed) Installed on Left side wall Available finishes: White **(WH)**, Teak**(TK)**	$ 925
S7027LPHENAL		$ 925
S7027LPHENAR	Solid fold-up phenolic seat with slats for drainage (factory installed) Installed on Right side wall Available finishes: White **(WH)**, Teak**(TK)**	$ 925
S7027LPHENAWHR		$ 925

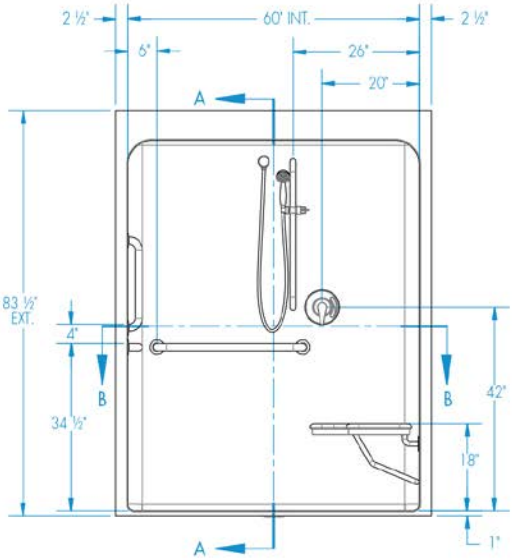
2 ½"
60" INT.
2 ½"
6"
26"
20"
A
83 ½"
EXT.
4"
B
34 ½"
B
42"
18"
1"
A

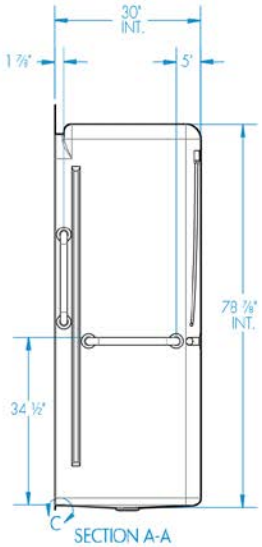
30"
INT.
1 ⅞"
5"
78 ⅞"
INT.
34 ½"
C
SECTION A-A

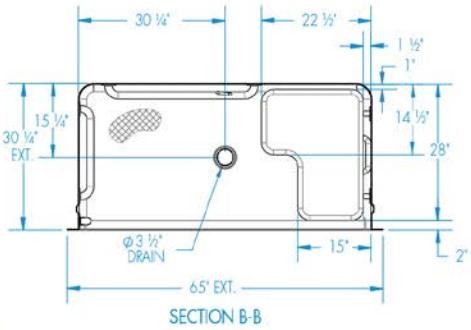
30 ¼"
22 ½"
1 ½"
1"
15 ¼"
30 ¼"
EXT.
14 ½"
28"
ø3 ½"
DRAIN
15"
2"
65" EXT.
SECTION B-B

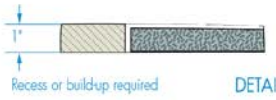
1"
Recess or build-up required
DETAIL C

6030CFS





Material : Premium Cast Acrylic

Features

- 1-Piece Shower
- 1 3/4 Inch skirt
- 1/2 Inch interior threshold
- Barrier free when properly installed
- Smooth wall is easy to clean
- Center drain
- Slip-resistant textured floor for safety
- Integral dome
- Premium cast acrylic surface
- Interior dimensions: 60 Inches x 30 Inches x 78-7/8 Inches
- Exterior dimensions: 65 Inches x 30-1/4 Inches x 83-3/4 Inches

6030CFS - PRICING CATEGORY : FL

SKU	Color	Configuration	Dimensions & Weight	MSRP
6030CFS-BI	Biscuit	Center Drain	60” x 30” x 78 7/8” / 206 lb 1524mm x 762mm x 2003mm / 93.42 kg	$ 2890
6030CFS-WH	White			$ 2855

6030CFS - ADA COMPLIANT CONFIGURATION

SKU	Color	Configuration	Dimensions & Weight	MSRP
6030CFS-BI	Biscuit	Center Drain ADA Compliant Configuration	60” x 30” x 78 7/8” / 206 lb 1524mm x 762mm x 2003mm / 93.42 kg	$ 5019
6030CFS-WH	White			$ 4984

6030CFS - ADA COMPLIANT CONFIGURATION WITHOUT SEAT

SKU	Color	Configuration	Dimensions & Weight	MSRP
6030CFS-BI	Biscuit	Center Drain ADA Compliant Configuration without Seat	60” x 30” x 78 7/8” / 206 lb 1524mm x 762mm x 2003mm / 93.42 kg	$ 4371
6030CFS-WH	White			$ 4336

6030CFS - ANSI COMPLIANT CONFIGURATION

SKU	Color	Configuration	Dimensions & Weight	MSRP
6030CFS-BI	Biscuit	Center Drain ANSI Compliant Configuration	60” x 30” x 78 7/8” / 206 lb 1524mm x 762mm x 2003mm / 93.42 kg	$ 5205
6030CFS-WH	White			$ 5170

6030CFS - L-BAR CONFIGURATION

SKU	Color	Configuration	Dimensions & Weight	MSRP
6030CFS-BI	Biscuit	Center Drain L-Bar Configuration	60” x 30” x 78 7/8” / 206 lb 1524mm x 762mm x 2003mm / 93.42 kg	$ 3270
6030CFS-WH	White			$ 3235

6030CFS - L-BAR CONFIGURATION AND FOLDING SEAT

SKU	Color	Configuration	Dimensions & Weight	MSRP
6030CFS-BI	Biscuit	Center Drain L-Bar Configuration and Folding Seat	60” x 30” x 78 7/8” / 206 lb 1524mm x 762mm x 2003mm / 93.42 kg	$ 4159

6030CFS - U-BAR

SKU	Color	Configuration	Dimensions & Weight	MSRP
6030CFS-BI	Biscuit	Center Drain U-Bar	60” x 30” x 78 7/8” / 206 lb 1524mm x 762mm x 2003mm / 93.42 kg	$ 3511
6030CFS-WH	White			$ 3476

OPTIONS

SKU	Description	MSRP
4200BRASDRSF	2” Brass Surefit Joint Shower Drain Brass drain material Snap in strainer-stainless steel No-caulk connection.	$ 48
DLN2	Ships ready to install 277 Volt for commercial applications	$ 228
DLN1	Ships ready to install - 120 Volt	$ 228
7175DISH	Stainless steel soap dish	$ 119
1VAL300	Single hand chrome pressure balancing mixing valve suitable for commercial use. One-piece ceramic cartridge. Maximum temperature limit stop Installed on right wall	$ 443
1VAL300	Single hand chrome pressure balancing mixing valve suitable for commercial use. One-piece ceramic cartridge. Maximum temperature limit stop Installed on left wall	$ 443
1VAL300	Single hand chrome pressure balancing mixing valve suitable for commercial use. One-piece ceramic cartridge. Maximum temperature limit stop Installed on back wall	$ 443
1SH0107COMPLETE	Handheld shower assembly with 30 inch slide bar and 60 inch hose. Installed on right wall	$ 417
1SH0107COMPLETE	Handheld shower assembly with 30 inch slide bar and 60 inch hose. Installed on left wall	$ 417
1SH0107COMPLETE	Handheld shower assembly with 30 inch slide bar and 60 inch hose. Installed on back wall	$ 417
S72360ROD	1” diameter Stainless Steel curtain rod for 60” model	$ 101
60CURTAIN	Curtain for 60” model Shipped loose	$ 156
1BAR109W	Stainless steel accessible 18 inch vertical grab bar, 1-1/4 inch diameter, concealed flanges All grab bars are factory installed and not sold separately. Available finishes: Stainless Steel**(SS)**, Powder Coated White **(W)**	$ 237
1BAR109SS		$ 186
S7123UGRABST	Package: Stainless steel accessible U-bar configuration (2) 18 inch and (1) 48 inch: 1-1/4 inch diameter, concealed flanges All grab bars are factory installed and not sold separately. Available finishes: Stainless Steel**(SS)**	$ 621

OPTIONS

SKU	Description	MSRP
S7123HGRABST	Package: Stainless steel accessible L-bar configuration (1) 18 inch and (1) 30 inch: 1-1/4 inch diameter, concealed flanges All grab bars are factory installed and not sold separately. Available finishes: Stainless Steel**(SS)**	$ 380
S7027LCUSHAL	White fold-up L-shaped cushioned seat (factory installed) Installed on Left side wall	$ 889
S7027LCUSHAR	White fold-up L-shaped cushioned seat (factory installed) Installed on Right side wall	$ 889
S7027LPHENAWHL	Solid fold-up phenolic seat with slats for drainage (factory installed) Installed on Left side wall Available finishes: White **(WH)**, Teak**(TK)**	$ 925
S7027LPHENAL		$ 925
S7027LPHENAR	Solid fold-up phenolic seat with slats for drainage (factory installed) Installed on Right side wall Available finishes: White **(WH)**, Teak**(TK)**	$ 925
S7027LPHENAWHR		$ 925

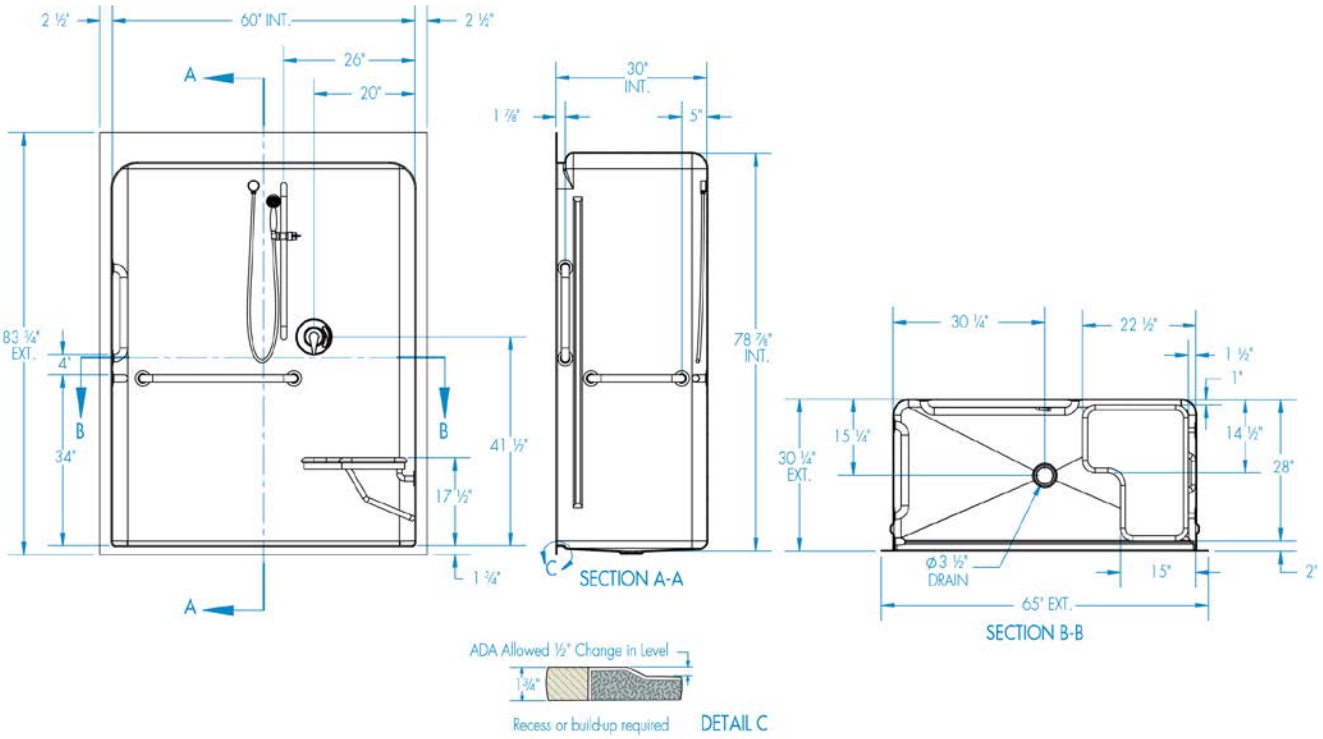
2 ½"
60" INT.
2 ½"
26"
20"
A
A
B
B
83 ¾" EXT.
4"
34"
41 ½"
17 ½"
1 ¾"
30" INT.
1 ⅞"
5"
78 ⅞" INT.
C
SECTION A-A
30 ¼"
22 ½"
1 ½"
1"
15 ¼"
14 ½"
28"
30 ¼" EXT.
ø3 ½" DRAIN
15"
2"
65" EXT.
SECTION B-B
ADA Allowed ½" Change in Level
1 ¾"
Recess or build-up required
DETAIL C

6036BFSC



Material : Premium Cast Acrylic

Features

- 1-Piece Shower
- 1 Inch skirt
- No interior threshold
- Barrier free when properly installed
- Smooth wall is easy to clean
- Center drain
- Slip-resistant textured floor for safety
- Integral dome
- Premium cast acrylic surface
- Interior dimensions: 60 Inches x 36 Inches x 79 Inches
- Exterior dimensions: 65 Inches x 37 Inches x 83-1/2 Inches

6036BFSC - PRICING CATEGORY : FL

SKU	Color	Configuration	Dimensions & Weight	MSRP
6036BFSC-BI	Biscuit	Center Drain	60” x 36” x 79” / 210 lb 1524mm x 914mm x 2007mm / 95.24 kg	$ 2987
6036BFSC-WH	White			$ 2952

6036BFSC - ADA COMPLIANT CONFIGURATION

SKU	Color	Configuration	Dimensions & Weight	MSRP
6036BFSC-BI	Biscuit	Center Drain ADA Compliant Configuration	60” x 36” x 79” / 210 lb 1524mm x 914mm x 2007mm / 95.24 kg	$ 5156
6036BFSC-WH	White			$ 5121

6036BFSC - ADA COMPLIANT CONFIGURATION WITHOUT SEAT

SKU	Color	Configuration	Dimensions & Weight	MSRP
6036BFSC-BI	Biscuit	Center Drain ADA Compliant Configuration without Seat	60” x 36” x 79” / 210 lb 1524mm x 914mm x 2007mm / 95.24 kg	$ 4548
6036BFSC-WH	White			$ 4513

6036BFSC - ANSI COMPLIANT CONFIGURATION

SKU	Color	Configuration	Dimensions & Weight	MSRP
6036BFSC-BI	Biscuit	Center Drain ANSI Compliant Configuration	60” x 36” x 79” / 210 lb 1524mm x 914mm x 2007mm / 95.24 kg	$ 5342
6036BFSC-WH	White			$ 5307

6036BFSC - L-BAR CONFIGURATION

SKU	Color	Configuration	Dimensions & Weight	MSRP
6036BFSC-BI	Biscuit	Center Drain L-Bar Configuration	60” x 36” x 79” / 210 lb 1524mm x 914mm x 2007mm / 95.24 kg	$ 3410
6036BFSC-WH	White			$ 3372

6036BFSC - L-BAR CONFIGURATION AND FOLDING SEAT

SKU	Color	Configuration	Dimensions & Weight	MSRP
6036BFSC-BI	Biscuit	Center Drain L-Bar Configuration and Folding Seat	60” x 36” x 79” / 210 lb 1524mm x 914mm x 2007mm / 95.24 kg	$ 4296

6036BFSC - U-BAR

SKU	Color	Configuration	Dimensions & Weight	MSRP
6036BFSC-BI	Biscuit	Center Drain U-Bar	60” x 36” x 79” / 210 lb 1524mm x 914mm x 2007mm / 95.24 kg	$ 3688
6036BFSC-WH	White			$ 3653

OPTIONS

SKU	Description	MSRP
4200BRASDRSF	2” Brass Surefit Joint Shower Drain Brass drain material Snap in strainer-stainless steel No-caulk connection.	$ 48
DLN2	Ships ready to install 277 Volt for commercial applications	$ 228
DLN1	Ships ready to install - 120 Volt	$ 228
7175DISH	Stainless steel soap dish	$ 119
1VAL300	Single hand chrome pressure balancing mixing valve suitable for commercial use. One-piece ceramic cartridge. Maximum temperature limit stop Installed on right wall	$ 443
1VAL300	Single hand chrome pressure balancing mixing valve suitable for commercial use. One-piece ceramic cartridge. Maximum temperature limit stop Installed on left wall	$ 443
1VAL300	Single hand chrome pressure balancing mixing valve suitable for commercial use. One-piece ceramic cartridge. Maximum temperature limit stop Installed on back wall	$ 443
1SH0107COMPLETE	Handheld shower assembly with 30 inch slide bar and 60 inch hose. Installed on right wall	$ 417
1SH0107COMPLETE	Handheld shower assembly with 30 inch slide bar and 60 inch hose. Installed on left wall	$ 417
1SH0107COMPLETE	Handheld shower assembly with 30 inch slide bar and 60 inch hose. Installed on back wall	$ 417
S72360ROD	1” diameter Stainless Steel curtain rod for 60” model	$ 101
60CURTAIN	Curtain for 60” model Shipped loose	$ 156
VINYLDAM	Vinyl dam for barrier free showers. Ideal for water containment.	$ 125
THRESHOLD	Removable threshold for barrier free showers. Ideal for water containment.	$ 187
S7036LCUSHAL	White fold-up L-shaped cushioned seat (factory installed) Installed on Left side wall	$ 889
S7036LCUSHAR	White fold-up L-shaped cushioned seat (factory installed) Installed on Right side wall	$ 847

OPTIONS

SKU	Description	MSRP
S7036LPHENAWL	Rectgangular fold-up phenolic seat (factory installed) MASS Compliant Installed on Left side wall Available finishes: White **(WH)**, Teak**(TK)**	$ 925
S7036LPHENAL		$ 925
S7030PHENAWR	Rectgangular fold-up phenolic seat (factory installed) MASS Compliant Installed on Right side wall Available finishes: White **(WH)**, Teak**(TK)**	$ 925
S7030PHENAR		$ 925
S7129HGRABST	Package: Stainless steel accessible L-bar configuration (1) 22 inch and (1) 30 inch: 1-1/4 inch diameter, concealed flanges All grab bars are factory installed and not sold separately. Available finishes: Stainless Steel**(SS)**	$ 420
S7129UGRABST	Package: Stainless steel accessible U-bar configuration (2) 22 inch and (1) 48 inch: 1-1/4 inch diameter, concealed flanges All grab bars are factory installed and not sold separately. Available finishes: Stainless Steel**(SS)**	$ 701

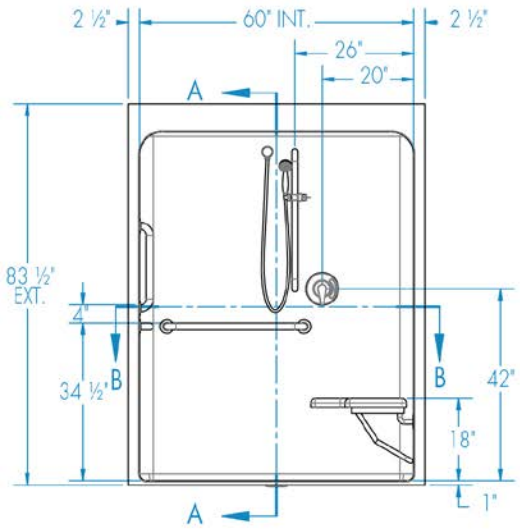

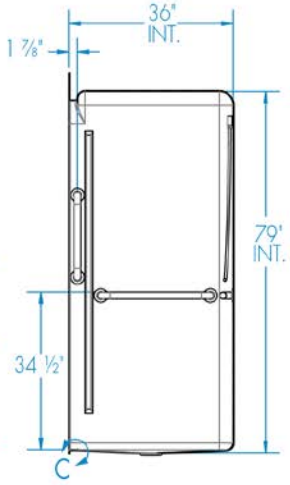

SECTION A-A

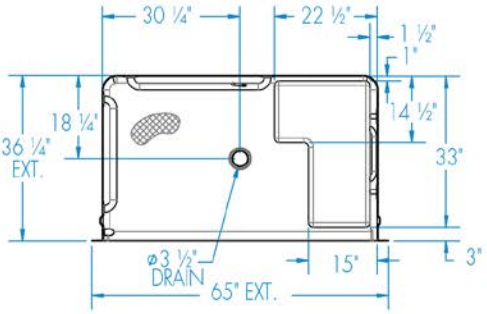

SECTION B-B

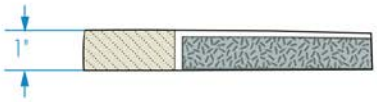

DETAIL C

6036CFS





Material : Premium Cast Acrylic

Features

- 1-Piece Shower
- 1 3/4 Inch skirt
- 1/2 Inch interior threshold
- Barrier free when properly installed
- Smooth wall is easy to clean
- Center drain
- Slip-resistant textured floor for safety
- Integral dome
- Premium cast acrylic surface
- Interior dimensions: 60 Inches x 36 Inches x 79 Inches
- Exterior dimensions: 65 Inches x 37 Inches x 83-3/4 Inches

6036CFS - PRICING CATEGORY : FL

SKU	Color	Configuration	Dimensions & Weight	MSRP
6036CFS-BI	Biscuit	Center Drain	60” x 36” x 79” / 210 lb 1524mm x 914mm x 2007mm / 95.24 kg	$ 2987
6036CFS-WH	White			$ 2952

6036CFS - ADA COMPLIANT CONFIGURATION

SKU	Color	Configuration	Dimensions & Weight	MSRP
6036CFS-BI	Biscuit	Center Drain ADA Compliant Configuration	60” x 36” x 79” / 210 lb 1524mm x 914mm x 2007mm / 95.24 kg	$ 5156
6036CFS-WH	White			$ 5121

6036CFS - ADA COMPLIANT CONFIGURATION WITHOUT SEAT

SKU	Color	Configuration	Dimensions & Weight	MSRP
6036CFS-BI	Biscuit	Center Drain ADA Compliant Configuration without Seat	60” x 36” x 79” / 210 lb 1524mm x 914mm x 2007mm / 95.24 kg	$ 4548
6036CFS-WH	White			$ 4513

6036CFS - L-BAR CONFIGURATION

SKU	Color	Configuration	Dimensions & Weight	MSRP
6036CFS-BI	Biscuit	Center Drain L-Bar Configuration	60” x 36” x 79” / 210 lb 1524mm x 914mm x 2007mm / 95.24 kg	$ 3407
6036CFS-WH	White			$ 3372

6036CFS - L-BAR CONFIGURATION AND FOLDING SEAT

SKU	Color	Configuration	Dimensions & Weight	MSRP
6036CFS-BI	Biscuit	Center Drain L-Bar Configuration and Folding Seat	60” x 36” x 79” / 210 lb 1524mm x 914mm x 2007mm / 95.24 kg	$ 4296

6036CFS - U-BAR

SKU	Color	Configuration	Dimensions & Weight	MSRP
6036CFS-BI	Biscuit	Center Drain U-Bar	60” x 36” x 79” / 210 lb 1524mm x 914mm x 2007mm / 95.24 kg	$ 3688
6036CFS-WH	White			$ 3653

OPTIONS

SKU	Description	MSRP
4200BRASDRSF	2” Brass Surefit Joint Shower Drain Brass drain material Snap in strainer-stainless steel No-caulk connection.	$ 48
DLN2	Ships ready to install 277 Volt for commercial applications	$ 228
DLN1	Ships ready to install - 120 Volt	$ 228
7175DISH	Stainless steel soap dish	$ 119
1VAL300	Single hand chrome pressure balancing mixing valve suitable for commercial use. One-piece ceramic cartridge. Maximum temperature limit stop Installed on right wall	$ 443
1VAL300	Single hand chrome pressure balancing mixing valve suitable for commercial use. One-piece ceramic cartridge. Maximum temperature limit stop Installed on left wall	$ 443
1VAL300	Single hand chrome pressure balancing mixing valve suitable for commercial use. One-piece ceramic cartridge. Maximum temperature limit stop Installed on back wall	$ 443
1SH0107COMPLETE	Handheld shower assembly with 30 inch slide bar and 60 inch hose. Installed on right wall	$ 417
1SH0107COMPLETE	Handheld shower assembly with 30 inch slide bar and 60 inch hose. Installed on left wall	$ 417
1SH0107COMPLETE	Handheld shower assembly with 30 inch slide bar and 60 inch hose. Installed on back wall	$ 417
S72360ROD	1” diameter Stainless Steel curtain rod for 60” model	$ 101
60CURTAIN	Curtain for 60” model Shipped loose	$ 156
35RKBO	Finish repair kit - Case of 12 Available in White **(WH)**, or Bone **(BO)**,	$ 303
35RKWH		$ 303
1BAR109W	Stainless steel accessible 18 inch vertical grab bar, 1-1/4 inch diameter, concealed flanges All grab bars are factory installed and not sold separately. Available finishes: Stainless Steel**(SS)**, Powder Coated White **(W)**	$ 237
1BAR109SS		$ 186
S7036LPHENL	Fold-up phenolic seat (factory installed) Installed on Left side wall Available finishes: White **(WH)**, Teak**(TK)**	$ 925
S7036LPHENWHL		$ 925
S7036LPHENR		$ 925
S7036LPHENWHR		$ 925
S7036LCUSHL	White fold-up L-shaped cushioned seat (factory installed) Installed on Left side wall	$ 889
S7036LCUSHR	White fold-up L-shaped cushioned seat (factory installed) Installed on Right side wall	$ 889

OPTIONS

SKU	Description	MSRP
S7129HGRABST	Package: Stainless steel accessible L-bar configuration (1) 22 inch and (1) 30 inch: 1-1/4 inch diameter, concealed flanges All grab bars are factory installed and not sold separately. Available finishes: Stainless Steel**(SS)**	$ 420
S7129UGRABST	Package: Stainless steel accessible U-bar configuration (2) 22 inch and (1) 48 inch: 1-1/4 inch diameter, concealed flanges All grab bars are factory installed and not sold separately. Available finishes: Stainless Steel**(SS)**	$ 701

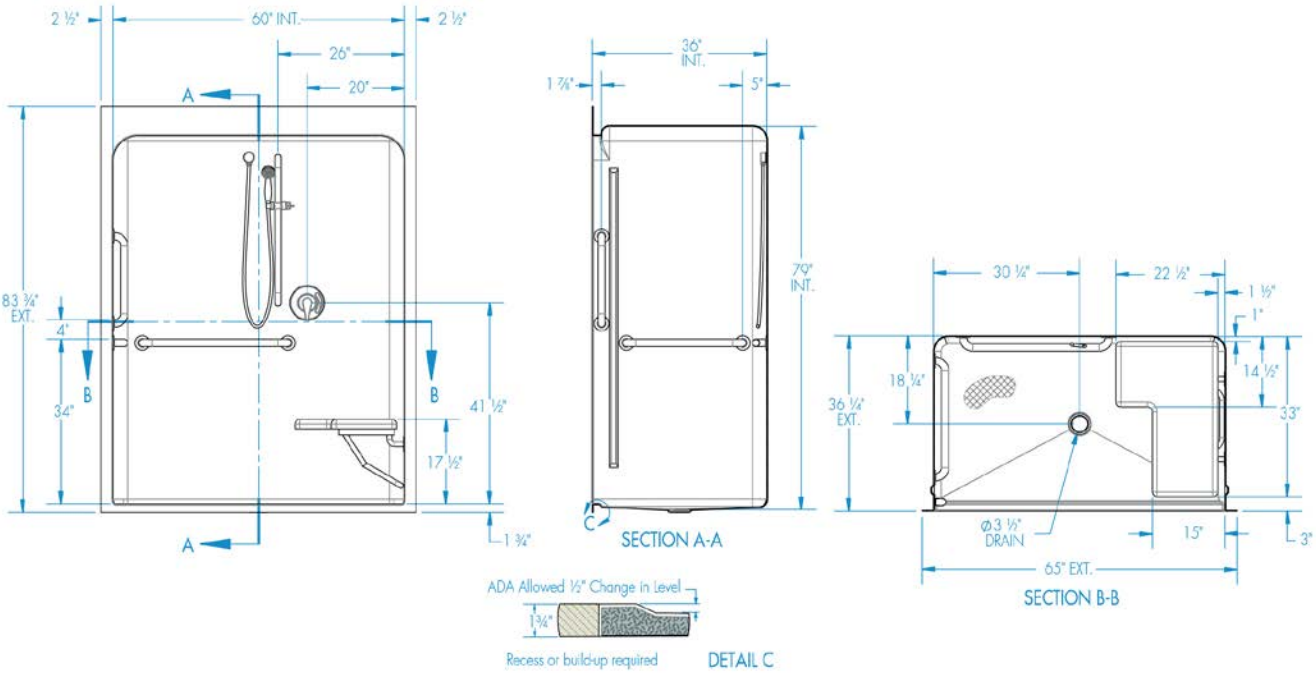
2 ½"
60" INT.
2 ½"
26"
20"
A
83 ¾" EXT.
4"
34"
B
B
41 ½"
17 ½"
A
1 ¾"
36" INT.
1 ⅞"
5"
79" INT.
C
SECTION A-A
ADA Allowed ½" Change in Level
¾"
Recess or build-up required
DETAIL C
30 ½"
22 ½"
1 ½"
1"
14 ½"
18 ¼"
36 ¼" EXT.
33"
Ø3 ½" DRAIN
15"
3"
65" EXT.
SECTION B-B

F1364P





Material : AcrylX™

Features

- 4-Piece Shower
- AcrylX™ applied acrylic surface
- 3/4 Inch skirt
- No interior threshold
- Barrier free when properly installed
- Slip-resistant textured floor for safety
- Decorative diagonal tile design is easy to clean
- Center rear drain
- Interior dimensions: 36 Inches x 36 Inches x 76 Inches
- Exterior dimensions: 39-3/4 Inches x 39 Inches x 78-1/2 Inches

F1364P - PRICING CATEGORY : FL

SKU	Color	Configuration	Dimensions & Weight	MSRP
F1364P--BO	Bone	Center Drain	36” x 36” x 76” / 152 lb 914mm x 914mm x 1930mm / 68.93 kg	$ 2324
F1364P-AL	Almond			$ 2324
F1364P-BI	Biscuit			$ 2324
F1364P-WH	White			$ 2289

F1364P - L-BAR CONFIGURATION

SKU	Color	Configuration	Dimensions & Weight	MSRP
F1364P-AL	Almond	Center Drain L-Bar Configuration	36” x 36” x 76” / 152 lb 914mm x 914mm x 1930mm / 68.93 kg	$ 2643
F1364P-BI	Biscuit			$ 2643
F1364P-BO	Bone			$ 2643
F1364P-WH	White			$ 2608

F1364P - L-BAR CONFIGURATION AND FOLDING SEAT

SKU	Color	Configuration	Dimensions & Weight	MSRP
F1364P-AL	Almond	Center Drain L-Bar Configuration and Folding Seat	36” x 36” x 76” / 152 lb 914mm x 914mm x 1930mm / 68.93 kg	$ 3532
F1364P-BI	Biscuit			$ 3532
F1364P-BO	Bone			$ 3532
F1364P-WH	White			$ 3497

F1364P - L-BAR CONFIGURATION, FOLDING SEAT AND HANDHELD SPRAYER

SKU	Color	Configuration	Dimensions & Weight	MSRP
F1364P-AL	Almond	Center Drain L-Bar Configuration, Folding Seat and Handheld Sprayer	36” x 36” x 76” / 152 lb 914mm x 914mm x 1930mm / 68.93 kg	$ 4578
F1364P-BI	Biscuit			$ 4578
F1364P-BO	Bone			$ 4578
F1364P-WH	White			$ 4543

OPTIONS

SKU	Description	MSRP
4200BRASDRSF	2” Brass Surefit Joint Shower Drain Brass drain material Snap in strainer-stainless steel No-caulk connection.	$ 48
7175DISH	Stainless steel soap dish	$ 119
1VAL300	Single hand chrome pressure balancing mixing valve suitable for commercial use. One-piece ceramic cartridge. Maximum temperature limit stop Installed on right wall	$ 443
1VAL300	Single hand chrome pressure balancing mixing valve suitable for commercial use. One-piece ceramic cartridge. Maximum temperature limit stop Installed on left wall	$ 443
1SH0107COMPLETE	Handheld shower assembly with 30 inch slide bar and 60 inch hose. Installed on right wall	$ 417
1SH0107COMPLETE	Handheld shower assembly with 30 inch slide bar and 60 inch hose. Installed on left wall	$ 417
S7336ROD	1” diameter Stainless Steel curtain rod	$ 76
36CURTAIN	Curtain for 36” model Shipped loose	$ 101
VINYLDAM	Vinyl dam for barrier free showers. Ideal for water containment.	$ 125
THRESHOLD	Removable threshold for barrier free showers. Ideal for water containment.	$ 187
35RKBO	Finish repair kit - Case of 12 Available in White **(WH)**, or Bone **(BO)**,	$ 303
35RKWH		$ 303
1BAR109W	Stainless steel accessible 18 inch vertical grab bar, 1-1/4 inch diameter, concealed flanges All grab bars are factory installed and not sold separately. Available finishes: Stainless Steel**(SS)**, Powder Coated White **(W)**	$ 237
1BAR109SS		$ 186
S7036LPHENL	Fold-up phenolic seat (factory installed) Installed on Left side wall Available finishes: White **(WH)**, Teak**(TK)**	$ 925
S7036LPHENWHL		$ 925
S7036LPHENR		$ 925
S7036LPHENWHR		$ 925
S7036LCUSHL	White fold-up L-shaped cushioned seat (factory installed) Installed on Left side wall	$ 889
S7036LCUSHR	White fold-up L-shaped cushioned seat (factory installed) Installed on Right side wall	$ 889
S1363GBARST	Stainless steel accessible L-shaped grab bar. 18 x 32 inches ,1-1/4 inch diameter, concealed flanges All grab bars are factory installed and not sold separately. Available finishes: Stainless Steel**(SS)**	$ 319

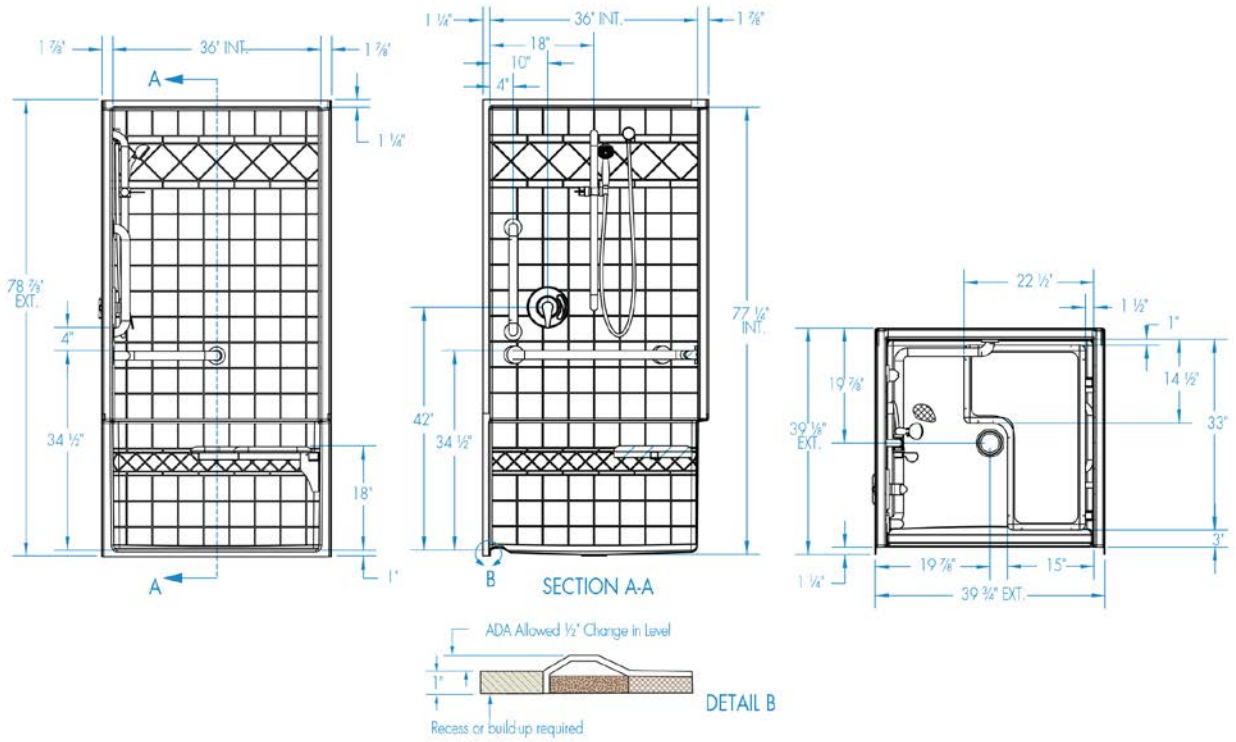
1 7/8"
36" INT.
1 7/8"
A
1 1/4"
78 7/8" EXT.
4"
34 1/2"
18"
1"
A
1 1/4"
36" INT.
1 7/8"
18"
10"
4"
42"
34 1/2"
77 1/4" INT.
B
SECTION A-A
22 1/2"
1 1/2"
1"
14 1/2"
19 7/8"
39 1/8" EXT.
33"
3"
19 7/8"
15"
1 1/4"
39 3/4" EXT.
ADA Allowed 1/2" Change in Level
1"
Recess or build-up required
DETAIL B

F1424P



Material : AcrylX™

Features

- 4-Piece Shower
- AcrylX™ applied acrylic surface
- 3/4 Inch skirt
- No interior threshold
- Barrier free when properly installed
- Slip-resistant textured floor for safety
- Decorative diagonal tile design is easy to clean
- Center rear drain
- Interior dimensions: 42 Inches x 48 Inches x 75-1/8 Inches
- Exterior dimensions: 45-3/4 Inches x 51-1/8 Inches x 77-5/8 Inches

F1424P - PRICING CATEGORY : FL

SKU	Color	Configuration	Dimensions & Weight	MSRP
F1424P--BI	Biscuit	Center Drain	42” x 48” x 75 1/8” / 198 lb 1067mm x 1219mm x 1908mm / 89.8 kg	$ 3502
F1424P--BO	Bone			$ 3502
F1424P-AL	Almond			$ 3502
F1424P-WH	White			$ 3467

F1424P - CALIFORNIA TITLE 24 COMPLIANT CONFIGURATION

SKU	Color	Configuration	Dimensions & Weight	MSRP
F1424P--BI	Biscuit	Center Drain California Title 24 Compliant Configuration	42” x 48” x 75 1/8” / 198 lb 1067mm x 1219mm x 1908mm / 89.8 kg	$ 35
F1424P-WH	White			$ 0

F1424P - L-BAR CONFIGURATION

SKU	Color	Configuration	Dimensions & Weight	MSRP
F1424P-AL	Almond	Center Drain L-Bar Configuration	42” x 48” x 75 1/8” / 198 lb 1067mm x 1219mm x 1908mm / 89.8 kg	$ 3976
F1424P-BI	Biscuit			$ 3976
F1424P-BO	Bone			$ 3976
F1424P-WH	White			$ 3941

F1424P - L-BAR CONFIGURATION AND FOLDING SEAT

SKU	Color	Configuration	Dimensions & Weight	MSRP
F1424P-AL	Almond	Center Drain L-Bar Configuration and Folding Seat	42” x 48” x 75 1/8” / 198 lb 1067mm x 1219mm x 1908mm / 89.8 kg	$ 4865
F1424P-BI	Biscuit			$ 4865
F1424P-BO	Bone			$ 4865
F1424P-WH	White			$ 4830

F1424P - L-BAR CONFIGURATION, FOLDING SEAT AND HANDHELD SPRAYER

SKU	Color	Configuration	Dimensions & Weight	MSRP
F1424P-AL	Almond	Center Drain L-Bar Configuration, Folding Seat and Handheld Sprayer	42” x 48” x 75 1/8” / 198 lb 1067mm x 1219mm x 1908mm / 89.8 kg	$ 6530
F1424P-BI	Biscuit			$ 6530
F1424P-BO	Bone			$ 6530
F1424P-WH	White			$ 6495

OPTIONS

SKU	Description	MSRP
4200BRASDRSF	2” Brass Surefit Joint Shower Drain Brass drain material Snap in strainer-stainless steel No-caulk connection.	$ 48
7175DISH	Stainless steel soap dish	$ 119
1VAL300	Single hand chrome pressure balancing mixing valve suitable for commercial use. One-piece ceramic cartridge. Maximum temperature limit stop Installed on right wall	$ 443
1VAL300	Single hand chrome pressure balancing mixing valve suitable for commercial use. One-piece ceramic cartridge. Maximum temperature limit stop Installed on left wall	$ 443
1VAL300	Single hand chrome pressure balancing mixing valve suitable for commercial use. One-piece ceramic cartridge. Maximum temperature limit stop Installed on back wall	$ 443
1SH0107COMPLETE	Handheld shower assembly with 30 inch slide bar and 60 inch hose. Installed on right wall	$ 417
1SH0107COMPLETE	Handheld shower assembly with 30 inch slide bar and 60 inch hose. Installed on left wall	$ 417
1SH0107COMPLETE	Handheld shower assembly with 30 inch slide bar and 60 inch hose. Installed on back wall	$ 417
S7242ROD	1” diameter Stainless Steel curtain rod	$ 89
42CURTAIN	Shipped loose	$ 125
VINYLDAM	Vinyl dam for barrier free showers. Ideal for water containment.	$ 125
THRESHOLD	Removable threshold for barrier free showers. Ideal for water containment.	$ 187
35RKBO	Finish repair kit - Case of 12 Available in White **(WH)**, or Bone **(BO)**,	$ 303
35RKWH		$ 303
S7036LPHENL	Fold-up phenolic seat (factory installed) Installed on Left side wall Available finishes: White **(WH)**, Teak**(TK)**	$ 925
S7036LPHENWHL		$ 925
S7036LPHENR		$ 925
S7036LPHENWHR		$ 925

OPTIONS

SKU	Description	MSRP
S7036LCUSHL	White fold-up L-shaped cushioned seat (factory installed) Installed on Left side wall	$ 889
S7036LCUSHR	White fold-up L-shaped cushioned seat (factory installed) Installed on Right side wall	$ 889
S7036LCUSHAL	White fold-up L-shaped cushioned seat (factory installed) Installed on Left side wall	$ 889

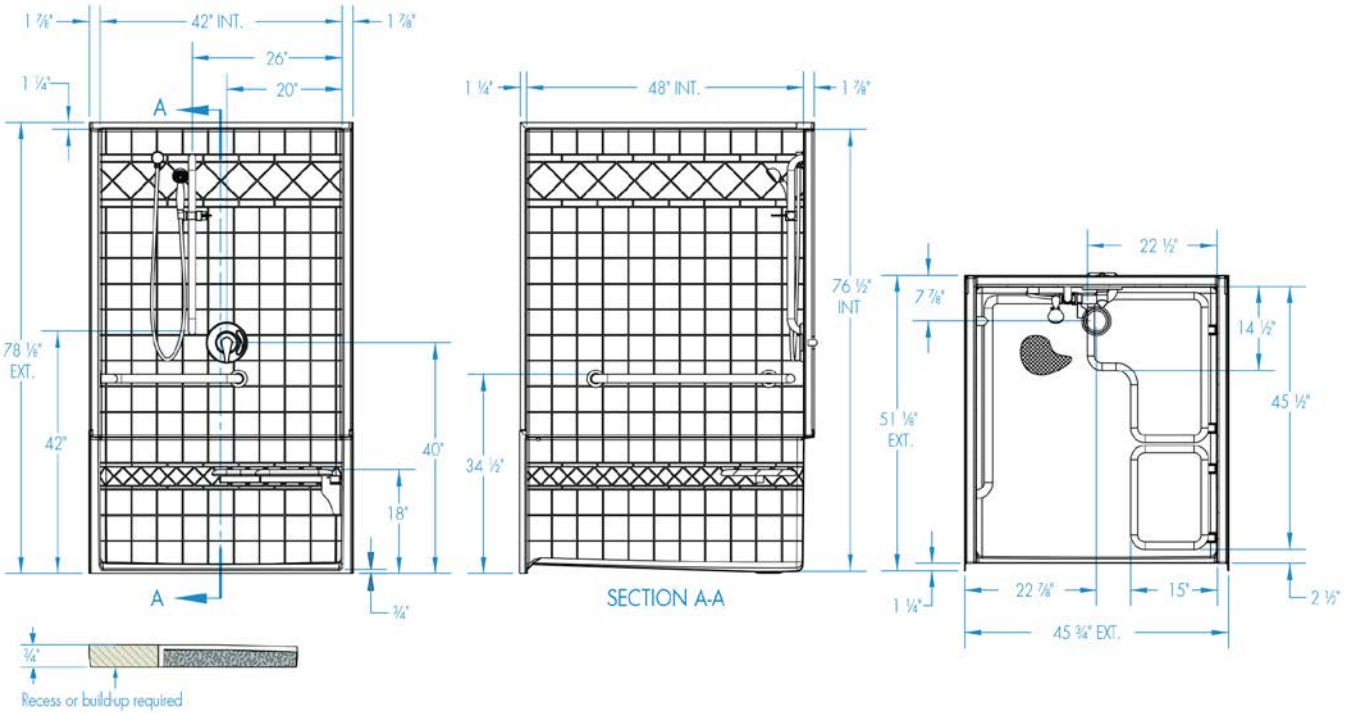
1 7/8"
42" INT.
1 7/8"
26"
20"
1 1/4"
A
78 1/8" EXT.
42"
40"
18"
3/4"
A
3/4"
Recess or build-up required
1 1/4"
48" INT.
1 7/8"
76 1/2" INT
34 1/2"
SECTION A-A
22 1/2"
7 7/8"
14 1/2"
45 1/2"
51 1/8" EXT.
1 1/4"
22 7/8"
15"
2 1/2"
45 3/4" EXT.

F1424PCA





Material : AcrylX™

Features

- 4-Piece Shower
- AcrylX™ applied acrylic surface
- Available in the West Zone Only
- 3/4 Inch skirt
- No interior threshold
- Barrier free when properly installed
- Slip-resistant textured floor for safety
- Decorative diagonal tile design is easy to clean
- Center rear drain
- Interior dimensions: 42 Inches x 48 Inches x 75-1/8 Inches
- Exterior dimensions: 45-3/4 Inches x 51-1/8 Inches x 77-5/8 Inches

F1424PCA - PRICING CATEGORY : FL

SKU	Color	Configuration	Dimensions & Weight	MSRP
F1424PCA--BI	Biscuit	Center Drain	42” x 48” x 75 1/8” / 198 lb 1067mm x 1219mm x 1908mm / 89.8 kg	$ 3502
F1424PCA--BO	Bone			$ 3502
F1424PCA-AL	Almond			$ 3502
F1424PCA-WH	White			$ 3467

F1424PCA - CALIFORNIA TITLE 24 COMPLIANT CONFIGURATION

SKU	Color	Configuration	Dimensions & Weight	MSRP
F1424PCA--BI	Biscuit	Center Drain California Title 24 Compliant Configuration	42” x 48” x 75 1/8” / 198 lb 1067mm x 1219mm x 1908mm / 89.8 kg	$ 6530
F1424PCA--BO	Bone			$ 6530
F1424PCA-AL	Almond			$ 6530
F1424PCA-WH	White			$ 6495

F1424PCA - L-BAR CONFIGURATION

SKU	Color	Configuration	Dimensions & Weight	MSRP
F1424PCA--BI	Biscuit	Center Drain L-Bar Configuration	42” x 48” x 75 1/8” / 198 lb 1067mm x 1219mm x 1908mm / 89.8 kg	$ 3976
F1424PCA--BO	Bone			$ 3976
F1424PCA-WH	White			$ 3941

F1424PCA - L-BAR CONFIGURATION AND FOLDING SEAT

SKU	Color	Configuration	Dimensions & Weight	MSRP
F1424PCA--BI	Biscuit	Center Drain L-Bar Configuration and Folding Seat	42” x 48” x 75 1/8” / 198 lb 1067mm x 1219mm x 1908mm / 89.8 kg	$ 4865
F1424PCA--BO	Bone			$ 4865
F1424PCA-AL	Almond			$ 3976
F1424PCA-WH	White			$ 4830

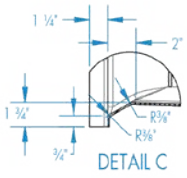

DETAIL C

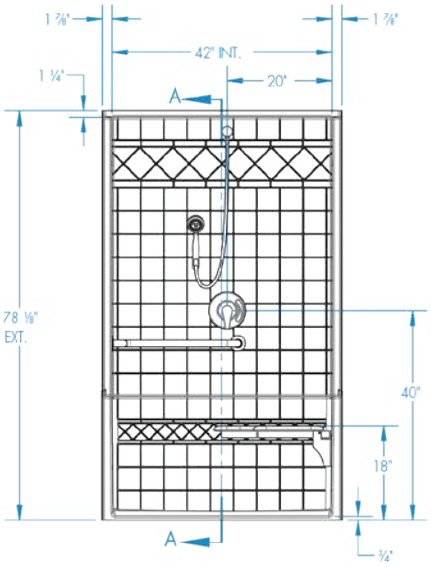

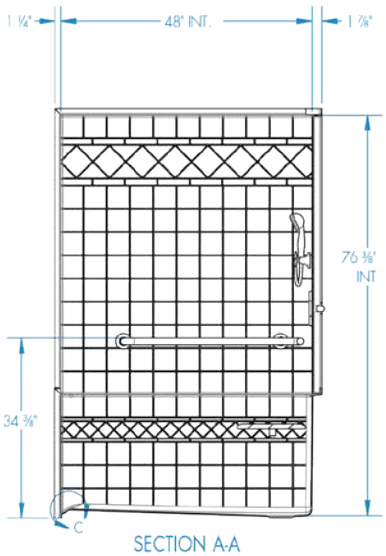

SECTION A-A

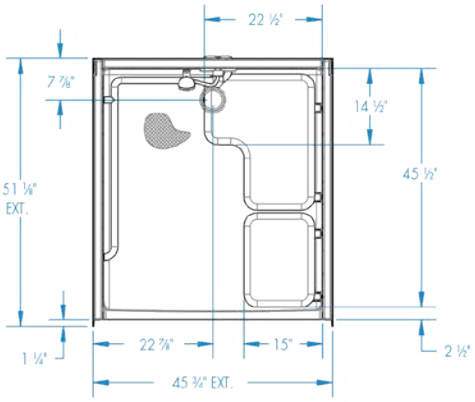

F1604P





Material : AcrylX™

Features

- 4-Piece Shower
- Pre-leveled base
- AcrylX™ applied acrylic surface
- 1 Inch skirt
- 1/2 Inch interior threshold
- Barrier free when properly installed
- Slip-resistant textured floor for safety
- Decorative diagonal tile design is easy to clean
- Center drain
- (30 year commercial)

F1604P - PRICING CATEGORY : FL

SKU	Color	Configuration	Dimensions & Weight	MSRP
F1604P-AL	Almond	Center Drain	60” x 34” x 75 1/2” / 174 lb 1524mm x 864mm x 1918mm / 78.91 kg	$ 2745
F1604P-BI	Biscuit			$ 2745
F1604P-BO	Bone			$ 2745
F1604P-WH	White			$ 2710

F1604P - ADA COMPLIANT CONFIGURATION

SKU	Color	Configuration	Dimensions & Weight	MSRP
F1604P-AL	Almond	Center Drain ADA Compliant Configuration	60” x 34” x 75 1/2” / 174 lb 1524mm x 864mm x 1918mm / 78.91 kg	$ 4914
F1604P-BI	Biscuit			$ 4914
F1604P-BO	Bone			$ 4914
F1604P-WH	White			$ 4879

F1604P - ADA COMPLIANT CONFIGURATION WITHOUT SEAT

SKU	Color	Configuration	Dimensions & Weight	MSRP
F1604P-AL	Almond	Center Drain ADA Compliant Configuration without Seat	60” x 34” x 75 1/2” / 174 lb 1524mm x 864mm x 1918mm / 78.91 kg	$ 4306
F1604P-BI	Biscuit			$ 4306
F1604P-BO	Bone			$ 4306
F1604P-WH	White			$ 4271

F1604P - ANSI COMPLIANT CONFIGURATION

SKU	Color	Configuration	Dimensions & Weight	MSRP
F1604P-AL	Almond	Center Drain ANSI Compliant Configuration	60” x 34” x 75 1/2” / 174 lb 1524mm x 864mm x 1918mm / 78.91 kg	$ 5100
F1604P-BI	Biscuit			$ 5100
F1604P-BO	Bone			$ 5100
F1604P-WH	White			$ 5065

F1604P - L-BAR CONFIGURATION

SKU	Color	Configuration	Dimensions & Weight	MSRP
F1604P-AL	Almond	Center Drain L-Bar Configuration	60” x 34” x 75 1/2” / 174 lb 1524mm x 864mm x 1918mm / 78.91 kg	$ 3165
F1604P-BI	Biscuit			$ 3165
F1604P-BO	Bone			$ 3165
F1604P-WH	White			$ 3130

F1604P - L-BAR CONFIGURATION AND FOLDING SEAT

SKU	Color	Configuration	Dimensions & Weight	MSRP
F1604P-AL	Almond	Center Drain L-Bar Configuration and Folding Seat	60” x 34” x 75 1/2” / 174 lb 1524mm x 864mm x 1918mm / 78.91 kg	$ 4054
F1604P-BI	Biscuit			$ 4054
F1604P-BO	Bone			$ 4054
F1604P-WH	White			$ 4019

F1604P - U-BAR

SKU	Color	Configuration	Dimensions & Weight	MSRP
F1604P-AL	Almond	Center Drain U-Bar	60” x 34” x 75 1/2” / 174 lb 1524mm x 864mm x 1918mm / 78.91 kg	$ 3446
F1604P-BI	Biscuit			$ 3446
F1604P-BO	Bone			$ 3446
F1604P-WH	White			$ 3411

OPTIONS

SKU	Description	MSRP
4200BRASDRSF	2” Brass Surefit Joint Shower Drain Brass drain material Snap in strainer-stainless steel No-caulk connection.	$ 48
7175DISH	Stainless steel soap dish	$ 119
1VAL300	Single hand chrome pressure balancing mixing valve suitable for commercial use. One-piece ceramic cartridge. Maximum temperature limit stop Installed on right wall	$ 443
1VAL300	Single hand chrome pressure balancing mixing valve suitable for commercial use. One-piece ceramic cartridge. Maximum temperature limit stop Installed on left wall	$ 443
1VAL300	Single hand chrome pressure balancing mixing valve suitable for commercial use. One-piece ceramic cartridge. Maximum temperature limit stop Installed on back wall	$ 443

OPTIONS

SKU	Description	MSRP
1SH0107COMPLETE	Handheld shower assembly with 30 inch slide bar and 60 inch hose. Installed on right wall	$ 417
1SH0107COMPLETE	Handheld shower assembly with 30 inch slide bar and 60 inch hose. Installed on left wall	$ 417
1SH0107COMPLETE	Handheld shower assembly with 30 inch slide bar and 60 inch hose. Installed on back wall	$ 417
S72360ROD	1” diameter Stainless Steel curtain rod for 60” model	$ 101
60CURTAIN	Curtain for 60” model Shipped loose	$ 156
35RKBO	Finish repair kit - Case of 12 Available in White **(WH)**, or Bone **(BO)**,	$ 303
35RKWH		$ 303
1BAR109W	Stainless steel accessible 18 inch vertical grab bar, 1-1/4 inch diameter, concealed flanges All grab bars are factory installed and not sold separately. Available finishes: Stainless Steel**(SS)**, Powder Coated White **(W)**	$ 237
1BAR109SS		$ 186
S7160UGRAB	Package: Stainless steel accessible U-bar configuration (2) 24 inch and (1) 48 inch: 1-1/4 inch diameter, concealed flanges All grab bars are factory installed and not sold separately. Available finishes: Stainless Steel**(SS)**	$ 701
S1603GBARST	Package: Stainless steel accessible L-bar configuration (1) 24 inch and (1) 30 inch: 1-1/4 inch diameter, concealed flanges All grab bars are factory installed and not sold separately. Available finishes: Stainless Steel**(SS)**	$ 420
S7030LCUSHL	White fold-up L-shaped cushioned seat (factory installed) Installed on Left side wall	$ 889
S7030LCUSHR	White fold-up L-shaped cushioned seat (factory installed) Installed on Right side wall	$ 889
S7030PHENL	Rectgangular fold-up phenolic seat (factory installed) Installed on Left side wall Available finishes: White **(WH)**, Teak**(TK)**	$ 925
S7030PHENWL		$ 925
S7030PHENWR	Rectgangular fold-up phenolic seat (factory installed) Installed on Right side wall Available finishes: White **(WH)**, Teak**(TK)**	$ 925
S7030PHENR		$ 925

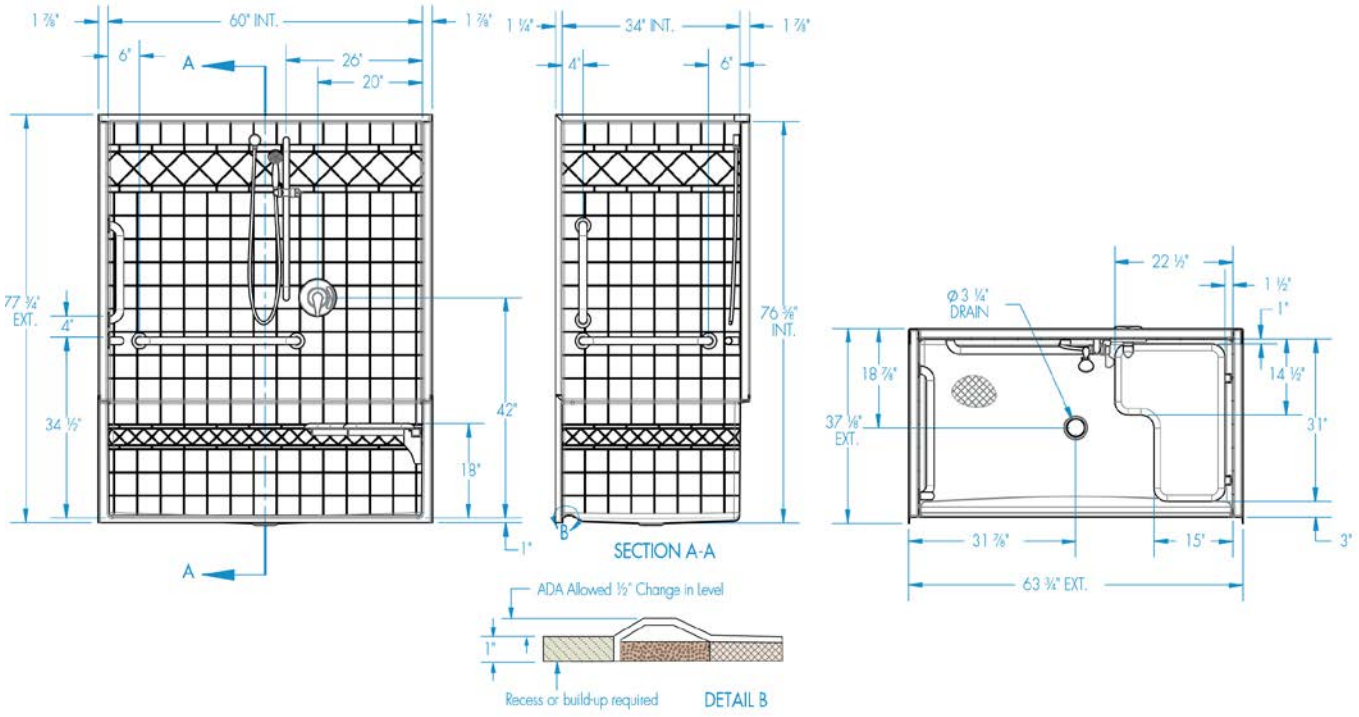
1 ⅞"
60" INT.
1 ⅞"
6"
A
26"
20"
77 ¾" EXT.
4"
34 ½"
42"
18"
1"
A
1 ¼"
34" INT.
1 ⅞"
4"
6"
76 ⅜" INT.
B
SECTION A-A
ADA Allowed ½" Change in Level
1"
Recess or build-up required
DETAIL B
22 ½"
1 ½"
1"
Ø 3 ¼" DRAIN
18 ⅞"
37 ⅛" EXT.
14 ½"
31"
31 ⅞"
15"
3"
63 ¾" EXT.

2603CTH





Material : AcrylX™

Features

- 1-Piece tub shower
- Smooth square tile wall finish is easy to clean with no messy grout lines
- 16 Inch skirt
- Molded toiletry shelf
- Slip resistant, textured floor for safety
- Left or right hand drain
- Interior dimensions: 56 Inches x 30-1/4 Inches x 73 Inches
- Exterior dimensions: 60 Inches x 33-1/4 Inches x 74-1/4 Inches
- AcrylX™ applied acrylic surface

2603CTH - PRICING CATEGORY : FL

SKU	Color	Configuration	Dimensions & Weight	MSRP
2603CTHL-AL	Almond	Base Model with Left Hand Drain with no Accessories	60” x 30” x 73” / 126 lb 1422mm x 762mm x 1854mm / 57.14 kg	$ 1413
2603CTHL-BI	Biscuit			$ 1413
2603CTHL-BO	Bone			$ 1413
2603CTHL-WH	White			$ 1378
2603CTHR-AL	Almond	Base Model with Right Hand Drain with no Accessories		$ 1413
2603CTHR-BI	Biscuit			$ 1413
2603CTHR-BO	Bone			$ 1413
2603CTHR-WH	White			$ 1378

2603CTH - ADA COMPLIANT CONFIGURATION

SKU	Color	Configuration	Dimensions & Weight	MSRP
2603CTHL-AL	Almond	Left Drain ADA Compliant Configuration	60” x 30” x 73” / 126 lb 1422mm x 762mm x 1854mm / 57.14 kg	$ 3889
2603CTHL-BI	Biscuit			$ 3889
2603CTHL-BO	Bone			$ 3889
2603CTHL-WH	White			$ 3854
2603CTHR-AL	Almond	Right Drain ADA Compliant Configuration		$ 3889
2603CTHR-BI	Biscuit			$ 3889
2603CTHR-BO	Bone			$ 3889
2603CTHR-WH	White			$ 3854

2603CTH - ANSI COMPLIANT CONFIGURATION

SKU	Color	Configuration	Dimensions & Weight	MSRP
2603CTHL-AL	Almond	Right Drain ANSI Compliant Configuration	60” x 30” x 73” / 126 lb 1422mm x 762mm x 1854mm / 57.14 kg	$ 4075
2603CTHL-BI	Biscuit			$ 4075
2603CTHL-BO	Bone			$ 4075
2603CTHL-WH	White			$ 4040
2603CTHR-AL	Almond	Left Drain ANSI Compliant Configuration		$ 4075
2603CTHR-BI	Biscuit			$ 4075
2603CTHR-BO	Bone			$ 4075
2603CTHR-WH	White			$ 4040

2603CTH - FOUR HORIZONTAL BARS

SKU	Color	Configuration	Dimensions & Weight	MSRP
2603CTHL-AL	Almond	Left Drain Four Horizontal Bars	60” x 30” x 73” / 126 lb 1422mm x 762mm x 1854mm / 57.14 kg	$ 2317
2603CTHL-BI	Biscuit			$ 2317
2603CTHL-BO	Bone			$ 2317
2603CTHL-WH	White			$ 2282
2603CTHR-AL	Almond	Right Drain Four Horizontal Bars		$ 2317
2603CTHR-BI	Biscuit			$ 2317
2603CTHR-BO	Bone			$ 2317
2603CTHR-WH	White			$ 2282

2603CTH - FOUR HORIZONTAL BARS AND REMOVABLE SEAT

SKU	Color	Configuration	Dimensions & Weight	MSRP
2603CTHL-AL	Almond	Left Drain Four Horizontal Bars and Removable Seat	60” x 30” x 73” / 126 lb 1422mm x 762mm x 1854mm / 57.14 kg	$ 3029
2603CTHL-BI	Biscuit			$ 3029
2603CTHL-BO	Bone			$ 3029
2603CTHL-WH	White			$ 2994
2603CTHR-AL	Almond	Right Drain Four Horizontal Bars and Removable Seat		$ 3029
2603CTHR-BI	Biscuit			$ 3029
2603CTHR-BO	Bone			$ 3029
2603CTHR-WH	White			$ 2994

OPTIONS

SKU	Description	MSRP
DDWO-PC	Designer drain waste & overflow kit Available finishes: White **(WH)**, Bone **(BO)**, Polished Chrome **(PC)**, Polished Brass**(PB)**, Brushed Nickel**(BN)**,	$ 288
DDWO-PB	Designer drain waste & overflow kit Available finishes: White **(WH)**, Bone **(BO)**, Polished Chrome **(PC)**, Polished Brass**(PB)**, Brushed Nickel**(BN)**,	$ 288
DDWO-BO	Designer drain waste & overflow kit Available finishes: White **(WH)**, Bone **(BO)**, Polished Chrome **(PC)**, Polished Brass**(PB)**, Brushed Nickel**(BN)**,	$ 288

OPTIONS

SKU	Description	MSRP
DDWO-WH	Designer drain waste & overflow kit Available finishes: White **(WH)**, Bone **(BO)**, Polished Chrome **(PC)**, Polished Brass**(PB)**, Brushed Nickel**(BN)**,	$ 288
DDWO-BN		$ 288
1S2815TRIFOLD	White tri-fold removable seat for tub shower	$ 712
S7050SEATR	End mountfold-up phenolic seat with slats for drainage (factory installed) Installed on Right side	$ 829
S7050SEATL	End mountfold-up phenolic seat with slats for drainage (factory installed) Installed on Left side	$ 829
1VAL300	Single hand chrome pressure balancing mixing valve suitable for commercial use. One-piece ceramic cartridge. Maximum temperature limit stop Installed on right wall	$ 443
1VAL300	Single hand chrome pressure balancing mixing valve suitable for commercial use. One-piece ceramic cartridge. Maximum temperature limit stop Installed on left wall	$ 443
1SH0107COMPLETE	Handheld shower assembly with 30 inch slide bar and 60 inch hose. Installed on right wall	$ 417
1SH0107COMPLETE	Handheld shower assembly with 30 inch slide bar and 60 inch hose. Installed on left wall	$ 417
S72360ROD	1” diameter Stainless Steel curtain rod for 60” model	$ 101
60CURTAIN	Curtain for 60” model Shipped loose	$ 156
35RKBO	Finish repair kit - Case of 12 Available in White **(WH)**, or Bone **(BO)**,	$ 303
35RKWH		$ 303
1BAR109W	Stainless steel accessible 18 inch vertical grab bar, 1-1/4 inch diameter, concealed flanges All grab bars are factory installed and not sold separately. Available finishes: Stainless Steel**(SS)**, Powder Coated White **(W)**	$ 237
1BAR109SS		$ 186
1BAR140W	Stainless steel accessible 24 inch grab bar, 1-1/4 inch diameter, concealed flanges All grab bars are factory installed and not sold separately. Available finishes: Stainless Steel**(SS)**, Powder Coated White **(W)**	$ 271
1BAR140SS		$ 226

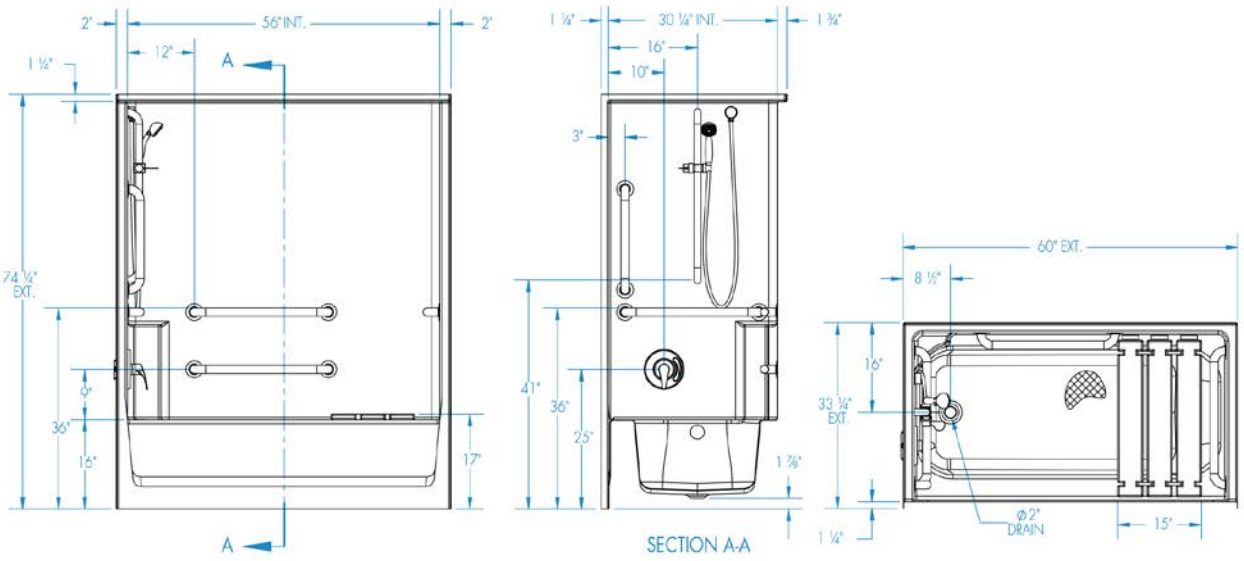
2"
56" INT.
2"
12"
A
1 ½"
74 ¼" EXT.
6"
36"
16"
17"
A
1 ¼"
30 ¼" INT.
1 ¾"
16"
10"
3"
41"
36"
25"
1 ⅞"
SECTION A-A
60" EXT.
8 ½"
16"
33 ¼" EXT.
1 ¼"
Ø 2" DRAIN
15"

2603SMTE



Material : AcrylX™

Features

- 1-Piece tub shower
- Classic smooth wall finish is easy to maintain
- 17 Inch skirt
- Partial reinforcement to accommodate standard grab bar locations
- Additional reinforcement available
- Slip resistant, textured floor for safety<
- AcrylX™ applied acrylic surface
- Interior dimensions: 56 Inches x 30-1/4 Inches x 78 Inches
- Exterior dimensions: 60 Inches x 33-1/4 Inches x 79-1/4 Inches)
- Order preconfigured packages or choose options

2603SMTE - PRICING CATEGORY : FL

SKU	Color	Configuration	Dimensions & Weight	MSRP
2603SMTEL-AL	Almond	Base Model with Left Hand Drain with no Accessories	60” x 32” x 78” / 199 lb 1524mm x 813mm x 1981mm / 90.25 kg	$ 1413
2603SMTEL-BI	Biscuit			$ 1413
2603SMTEL-BO	Bone			$ 1413
2603SMTEL-WH	White			$ 1378
2603SMTER-AL	Almond	Base Model with Right Hand Drain with no Accessories		$ 1413
2603SMTER-BI	Biscuit			$ 1413
2603SMTER-BO	Bone			$ 1413
2603SMTER-WH	White			$ 1378

2603SMTE - ADA COMPLIANT CONFIGURATION

SKU	Color	Configuration	Dimensions & Weight	MSRP
2603SMTEL-AL	Almond	Left Drain ADA Compliant Configuration	60” x 32” x 78” / 199 lb 1524mm x 813mm x 1981mm / 90.25 kg	$ 3889
2603SMTEL-BI	Biscuit			$ 3889
2603SMTEL-BO	Bone			$ 3889
2603SMTEL-WH	White			$ 3854
2603SMTER-AL	Almond	Right Drain ADA Compliant Configuration		$ 3889
2603SMTER-BI	Biscuit			$ 3889
2603SMTER-BO	Bone			$ 3889
2603SMTER-WH	White			$ 3854

2603SMTE - ANSI COMPLIANT CONFIGURATION

SKU	Color	Configuration	Dimensions & Weight	MSRP
2603SMTEL-AL	Almond	Right Drain ANSI Compliant Configuration	60” x 32” x 78” / 199 lb 1524mm x 813mm x 1981mm / 90.25 kg	$ 4075
2603SMTEL-BI	Biscuit			$ 4075
2603SMTEL-BO	Bone			$ 4075
2603SMTEL-WH	White			$ 4040
2603SMTER-AL	Almond	Left Drain ANSI Compliant Configuration		$ 4075
2603SMTER-BI	Biscuit			$ 4075
2603SMTER-BO	Bone			$ 4075
2603SMTER-WH	White			$ 4040

2603SMTE - FOUR HORIZONTAL BARS

SKU	Color	Configuration	Dimensions & Weight	MSRP
2603SMTEL-AL	Almond	Left Drain Four Horizontal Bars	60” x 32” x 78” / 199 lb 1524mm x 813mm x 1981mm / 90.25 kg	$ 2317
2603SMTEL-BI	Biscuit			$ 2317
2603SMTEL-BO	Bone			$ 2317
2603SMTEL-WH	White			$ 2282
2603SMTER-AL	Almond	Right Drain Four Horizontal Bars		$ 2317
2603SMTER-BI	Biscuit			$ 2317
2603SMTER-BO	Bone			$ 2317
2603SMTER-WH	White			$ 2282

2603SMTE - FOUR HORIZONTAL BARS AND REMOVABLE SEAT

SKU	Color	Configuration	Dimensions & Weight	MSRP
2603SMTEL-AL	Almond	Left Drain Four Horizontal Bars and Removable Seat	60” x 32” x 78” / 199 lb 1524mm x 813mm x 1981mm / 90.25 kg	$ 3029
2603SMTEL-BI	Biscuit			$ 3029
2603SMTEL-BO	Bone			$ 3029
2603SMTEL-WH	White			$ 2994
2603SMTER-AL	Almond	Right Drain Four Horizontal Bars and Removable Seat		$ 3029
2603SMTER-BI	Biscuit			$ 3029
2603SMTER-BO	Bone			$ 3029
2603SMTER-WH	White			$ 2994

2603SMTEMA - TWO ETCHED HORIZONTAL BARS

SKU	Color	Configuration	Dimensions & Weight	MSRP
2603SMTEMAL-AL	Almond	Left Drain Two Etched Horizontal Bars	60” x 32” x 78” / 199 lb 1524mm x 813mm x 1981mm / 90.25 kg	$ 2201
2603SMTEMAL-BI	Biscuit			$ 2201
2603SMTEMAL-WH	White			$ 2166
2603SMTEMAR-AL	Almond	Right Drain Two Etched Horizontal Bars		$ 2201

2603SMTEMA - TWO ETCHED HORIZONTAL BARS

SKU	Color	Configuration	Dimensions & Weight	MSRP
2603SMTEMAR-BI	Biscuit	Right Drain Two Etched Horizontal Bars	60” x 32” x 78” / 199 lb 1524mm x 813mm x 1981mm / 90.25 kg	$ 2201
2603SMTEMAR-BO	Bone			$ 2201
2603SMTEMAR-WH	White			$ 2166
2603SMTEML-BO	Bone	Left Drain Two Etched Horizontal Bars		$ 2201

2603SMTEMA - TWO ETCHED HORIZONTAL BARS AND FOLDING SEAT

SKU	Color	Configuration	Dimensions & Weight	MSRP
2603SMTEMAL-AL	Almond	Left Drain Two Etched Horizontal Bars and Folding Seat	60” x 32” x 78” / 199 lb 1524mm x 813mm x 1981mm / 90.25 kg	$ 2913
2603SMTEMAL-BI	Biscuit			$ 2913
2603SMTEMAL-WH	White			$ 2878
2603SMTEMAR-AL	Almond	Right Drain Two Etched Horizontal Bars and Folding Seat		$ 2913
2603SMTEMAR-BI	Biscuit			$ 2913
2603SMTEMAR-BO	Bone			$ 2913
2603SMTEMAR-WH	White			$ 2878
2603SMTEML-BO	Bone	Left Drain Two Etched Horizontal Bars and Folding Seat		$ 2913

2603SMTEMA - MAS 521 CMR COMPLIANT CONFIGURATION

SKU	Color	Configuration	Dimensions & Weight	MSRP
2603SMTEMAL-AL	Almond	Left Drain MAS 521 CMR Compliant Configuration	60” x 32” x 78” / 199 lb 1524mm x 813mm x 1981mm / 90.25 kg	$ 4167
2603SMTEMAL-BI	Biscuit			$ 4167
2603SMTEMAL-WH	White			$ 4132
2603SMTEMAR-AL	Almond	Right Drain MAS 521 CMR Compliant Configuration		$ 4167
2603SMTEMAR-BI	Biscuit			$ 4167
2603SMTEMAR-BO	Bone			$ 4167
2603SMTEMAR-WH	White			$ 4132
2603SMTEML-BO	Bone	Left Drain MAS 521 CMR Compliant Configuration		$ 4167

OPTIONS

SKU	Description	MSRP
DDWO-PC	Designer drain waste & overflow kit Available finishes: White **(WH)**, Bone **(BO)**, Polished Chrome **(PC)**, Polished Brass**(PB)**, Brushed Nickel**(BN)**,	$ 288
DDWO-PB	Designer drain waste & overflow kit Available finishes: White **(WH)**, Bone **(BO)**, Polished Chrome **(PC)**, Polished Brass**(PB)**, Brushed Nickel**(BN)**,	$ 288
DDWO-BO	Designer drain waste & overflow kit Available finishes: White **(WH)**, Bone **(BO)**, Polished Chrome **(PC)**, Polished Brass**(PB)**, Brushed Nickel**(BN)**,	$ 288
DDWO-WH		$ 288
DDWO-BN		$ 288
1S2815TRIFOLD	White tri-fold removable seat for tub shower	$ 712

OPTIONS

SKU	Description	MSRP
S7050SEATR	End mountfold-up phenolic seat with slats for drainage (factory installed) Installed on Right side	$ 829
S7050SEATL	End mountfold-up phenolic seat with slats for drainage (factory installed) Installed on Left side	$ 829
S4030SHRVLV-R	Single hand chrome pressure balancing mixing valve suitable for commercial use. One-piece ceramic cartridge. Maximum temperature limit stop Installed on right wall	$ 443
S4030SHRVLV-L	Single hand chrome pressure balancing mixing valve suitable for commercial use. One-piece ceramic cartridge. Maximum temperature limit stop Installed on left wall	$ 443
S4032MASS-R	Handheld shower assembly with 30 inch slide bar and 60 inch hose. MASS compliant Installed on right wall	$ 417
S4032MASS-L	Handheld shower assembly with 30 inch slide bar and 60 inch hose. MASS compliant Installed on left wall	$ 417
S72360ROD	1” diameter Stainless Steel curtain rod for 60” model	$ 101
60CURTAIN	Curtain for 60” model Shipped loose	$ 156
1BAR136SSPEEN	MASS Compliant Stainless Steel etched accessible 48 inch grab bar, 1-1/4 inch diameter Custom location installation; drawing required. All grab bars are factory installed and not sold separately. Not all bars available on all units, consult customer care. Available finishes: Stainless Steel**(SS)**,	$ 394
35RKBO	Finish repair kit - Case of 12 Available in White **(WH)**, or Bone **(BO)**,	$ 303
35RKWH		$ 303
1BAR109W	Stainless steel accessible 18 inch vertical grab bar, 1-1/4 inch diameter, concealed flanges All grab bars are factory installed and not sold separately. Available finishes: Stainless Steel**(SS)**, Powder Coated White **(W)**	$ 237
1BAR109SS		$ 186

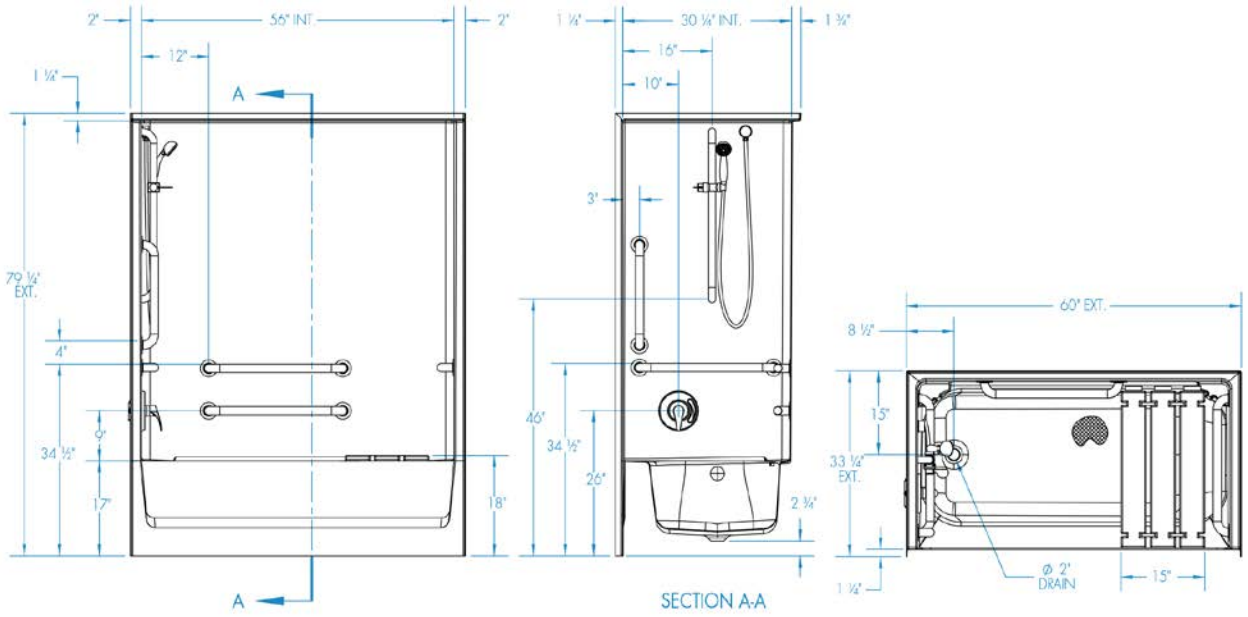
2"
56" INT.
2"
12"
1 ¼"
A
79 ¼" EXT.
4"
34 ½"
9"
17"
18"
A
1 ½"
30 ¼" INT.
1 ½"
16"
10"
3"
46"
34 ½"
26"
2 ¾"
SECTION A-A
60" EXT.
8 ½"
15"
33 ¼" EXT.
1 ¼"
Ø 2" DRAIN
15"

2603SMTH



Material : AcrylX™

Features

- 1-Piece tub shower
- Classic smooth wall finish is easy to maintain
- 17 Inch skirt
- Partial reinforcement to accommodate standard grab bar locations
- Additional reinforcement available
- This AFR unit accommodates the installation of drain, waste and overflow above the floor
- Slip resistant, textured floor for safety
- AcrylX™ applied acrylic surface
- Interior dimensions: 56 Inches x 30-1/4 Inches x 80 Inches
- Exterior dimensions: 60 Inches x 33-1/4 Inches x 80-1/4 Inches)
- Order pre-configured packages or choose options

2603SMTH - PRICING CATEGORY : FL

SKU	Color	Configuration	Dimensions & Weight	MSRP
2603SMTHL-AL	Almond	Base Model with Left Hand Drain with no Accessories	60” x 32” x 80” / 181 lb 1524mm x 813mm x 2032mm / 82.09 kg	$ 1493
2603SMTHL-BO	Bone			$ 1493
2603SMTHL-WH	White			$ 1458
2603SMTHLE-BI	Biscuit			$ 1493
2603SMTHR-AL	Almond	Base Model with Right Hand Drain with no Accessories		$ 1493
2603SMTHR-BI	Biscuit			$ 1493
2603SMTHR-BO	Bone			$ 1493
2603SMTHR-WH	White			$ 1458

2603SMTH - FOUR HORIZONTAL BARS

SKU	Color	Configuration	Dimensions & Weight	MSRP
2603SMTHL-AL	Almond	Left Drain Four Horizontal Bars	60” x 32” x 80” / 181 lb 1524mm x 813mm x 2032mm / 82.09 kg	$ 2397
2603SMTHL-BO	Bone			$ 2397
2603SMTHL-WH	White			$ 2362
2603SMTHLE-BI	Biscuit			$ 2397
2603SMTHR-AL	Almond	Right Drain Four Horizontal Bars		$ 2397
2603SMTHR-BI	Biscuit			$ 2397
2603SMTHR-BO	Bone			$ 2397
2603SMTHR-WH	White			$ 2362

2603SMTH - FOUR HORIZONTAL BARS AND REMOVABLE SEAT

SKU	Color	Configuration	Dimensions & Weight	MSRP
2603SMTHL-AL	Almond	Left Drain Four Horizontal Bars and Removable Seat	60” x 32” x 80” / 181 lb 1524mm x 813mm x 2032mm / 82.09 kg	$ 3109
2603SMTHL-BO	Bone			$ 3109
2603SMTHL-WH	White			$ 3074
2603SMTHLE-BI	Biscuit			$ 3109
2603SMTHR-AL	Almond	Right Drain Four Horizontal Bars and Removable Seat		$ 3109
2603SMTHR-BI	Biscuit			$ 3109
2603SMTHR-BO	Bone			$ 3109
2603SMTHR-WH	White			$ 3074

OPTIONS

SKU	Description	MSRP
DDWO-PC	Designer drain waste & overflow kit Available finishes: White **(WH)**, Bone **(BO)**, Polished Chrome **(PC)**, Polished Brass**(PB)**, Brushed Nickel**(BN)**,	$ 288
DDWO-PB	Designer drain waste & overflow kit Available finishes: White **(WH)**, Bone **(BO)**, Polished Chrome **(PC)**, Polished Brass**(PB)**, Brushed Nickel**(BN)**,	$ 288
DDWO-BO	Designer drain waste & overflow kit Available finishes: White **(WH)**, Bone **(BO)**, Polished Chrome **(PC)**, Polished Brass**(PB)**, Brushed Nickel**(BN)**,	$ 288
DDWO-WH		$ 288
DDWO-BN		$ 288
1S2815TRIFOLD	White tri-fold removable seat for tub shower	$ 712
S7050SEATR	End mountfold-up phenolic seat with slats for drainage (factory installed) Installed on Right side	$ 829
S7050SEATL	End mountfold-up phenolic seat with slats for drainage (factory installed) Installed on Left side	$ 829
1VAL300	Single hand chrome pressure balancing mixing valve suitable for commercial use. One-piece ceramic cartridge. Maximum temperature limit stop Installed on right wall	$ 443
1VAL300	Single hand chrome pressure balancing mixing valve suitable for commercial use. One-piece ceramic cartridge. Maximum temperature limit stop Installed on left wall	$ 443
1SH0107COMPLETE	Handheld shower assembly with 30 inch slide bar and 60 inch hose. Installed on right wall	$ 417
1SH0107COMPLETE	Handheld shower assembly with 30 inch slide bar and 60 inch hose. Installed on left wall	$ 417
S72360ROD	1” diameter Stainless Steel curtain rod for 60” model	$ 101
60CURTAIN	Curtain for 60” model Shipped loose	$ 156
35RKBO	Finish repair kit - Case of 12 Available in White **(WH)**, or Bone **(BO)**,	$ 303
35RKWH		$ 303
1BAR109W	Stainless steel accessible 18 inch vertical grab bar, 1-1/4 inch diameter, concealed flanges All grab bars are factory installed and not sold separately. Available finishes: Stainless Steel**(SS)**, Powder Coated White **(W)**	$ 237
1BAR109SS		$ 186
1BAR140W	Stainless steel accessible 24 inch grab bar, 1-1/4 inch diameter, concealed flanges All grab bars are factory installed and not sold separately. Available finishes: Stainless Steel**(SS)**, Powder Coated White **(W)**	$ 271
1BAR140SS		$ 226

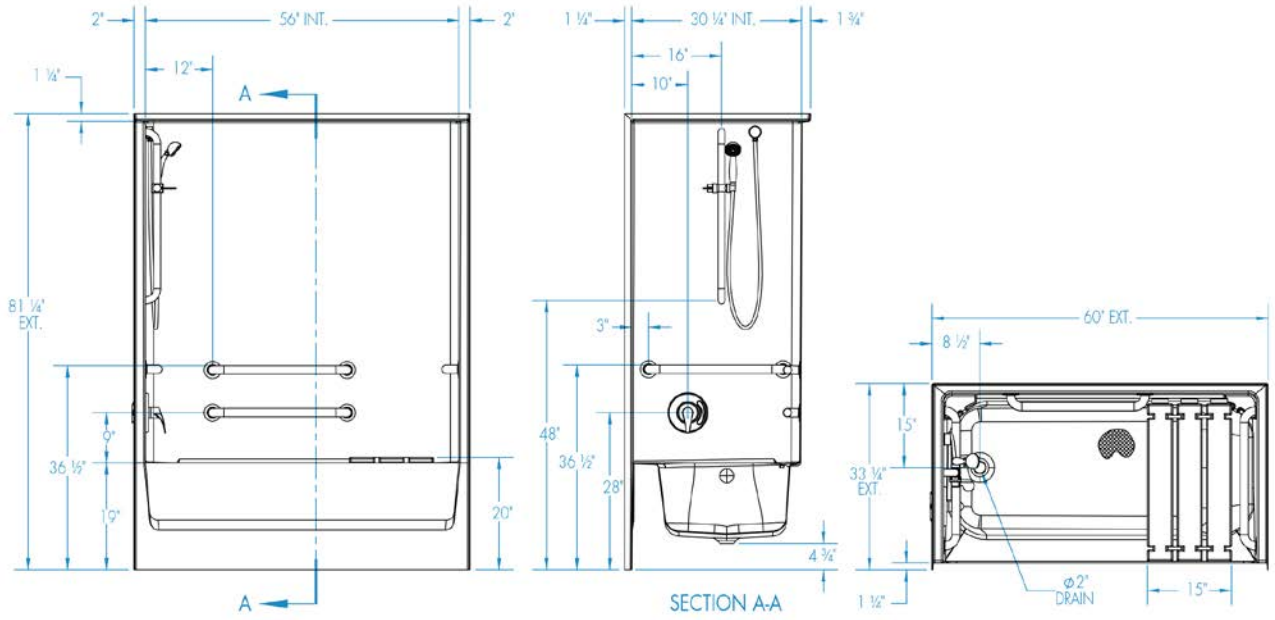
2"
56" INT.
2"
1 ¼"
12"
A
81 ¼" EXT.
6"
36 ½"
19"
20"
A
1 ¼"
30 ¼" INT.
1 ¾"
16"
10"
3"
48"
36 ½"
28"
4 ¾"
SECTION A-A
60" EXT.
8 ½"
15"
33 ¼" EXT.
1 ½"
ø2" DRAIN
15"

6032ITS





Material : Premium Cast Acrylic

Features

- 1-Piece tub Shower
- East zone only
- 17 Inch skirt
- Classic smooth wall is easy to maintain
- Left or right hand drain
- Integral dome top
- Slip resistant, textured floor for safety
- Premium cast acrylic surface
- Interior dimensions: 60 Inches x 32 Inches x 80-1/2 Inches
- Exterior dimensions: 65 Inches x 33 Inches x 84 Inches
- Available in the East only

6032ITS - PRICING CATEGORY : FL

SKU	Color	Configuration	Dimensions & Weight	MSRP
6032ITSL-BI	Biscuit	Base Model with Left Hand Drain with no Accessories	60” x 32” x 80” / 175 lb 1524mm x 813mm x 2032mm / 79.37 kg	$ 2181
6032ITSL-WH	White			$ 2146
6032ITSR-BI	Biscuit	Base Model with Right Hand Drain with no Accessories		$ 2181
6032ITSR-WH	White			$ 2146

6032ITS - ADA COMPLIANT CONFIGURATION

SKU	Color	Configuration	Dimensions & Weight	MSRP
6032ITSL-BI	Biscuit	Left Drain ADA Compliant Configuration	60” x 32” x 80” / 175 lb 1524mm x 813mm x 2032mm / 79.37 kg	$ 3868
6032ITSL-WH	White			$ 3833
6032ITSR-BI	Biscuit	Right Drain ADA Compliant Configuration		$ 3868
6032ITSR-WH	White			$ 3833

6032ITS - ANSI COMPLIANT CONFIGURATION

SKU	Color	Configuration	Dimensions & Weight	MSRP
6032ITSL-BI	Biscuit	Right Drain ANSI Compliant Configuration	60” x 32” x 80” / 175 lb 1524mm x 813mm x 2032mm / 79.37 kg	$ 4391
6032ITSL-WH	White			$ 4356
6032ITSR-BI	Biscuit	Left Drain ANSI Compliant Configuration		$ 4391
6032ITSR-WH	White			$ 4356

6032ITS - FOUR HORIZONTAL BARS

SKU	Color	Configuration	Dimensions & Weight	MSRP
6032ITSL-BI	Biscuit	Left Drain Four Horizontal Bars	60” x 32” x 80” / 175 lb 1524mm x 813mm x 2032mm / 79.37 kg	$ 2181
6032ITSL-WH	White			$ 2146
6032ITSR-BI	Biscuit	Right Drain Four Horizontal Bars		$ 2931
6032ITSR-WH	White			$ 2896

6032ITS - FOUR HORIZONTAL BARS AND REMOVABLE SEAT

SKU	Color	Configuration	Dimensions & Weight	MSRP
6032ITSL-BI	Biscuit	Left Drain Four Horizontal Bars and Removable Seat	60” x 32” x 80” / 175 lb 1524mm x 813mm x 2032mm / 79.37 kg	$ 3522
6032ITSL-WH	White			$ 3487
6032ITSR-WH		Right Drain Four Horizontal Bars and Removable Seat		$ 3487
6032ITSRL-BI	Biscuit			$ 3522

OPTIONS

SKU	Description	MSRP
DDWO-PC	Designer drain waste & overflow kit Available finishes: White **(WH)**, Bone **(BO)**, Polished Chrome **(PC)**, Polished Brass**(PB)**, Brushed Nickel**(BN)**,	$ 288
DDWO-PB	Designer drain waste & overflow kit Available finishes: White **(WH)**, Bone **(BO)**, Polished Chrome **(PC)**, Polished Brass**(PB)**, Brushed Nickel**(BN)**,	$ 288
DDWO-BO	Designer drain waste & overflow kit Available finishes: White **(WH)**, Bone **(BO)**, Polished Chrome **(PC)**, Polished Brass**(PB)**, Brushed Nickel**(BN)**,	$ 288
DDWO-WH		$ 288
DDWO-BN		$ 288
DLN2	Ships ready to install 277 Volt for commercial applications	$ 228
DLN1	Ships ready to install - 120 Volt	$ 228
1S2815TRIFOLD	White tri-fold removable seat for tub shower	$ 712
S7050SEATR	End mountfold-up phenolic seat with slats for drainage (factory installed) Installed on Right side	$ 829
S7050SEATL	End mountfold-up phenolic seat with slats for drainage (factory installed) Installed on Left side	$ 829
1VAL300	Single hand chrome pressure balancing mixing valve suitable for commercial use. One-piece ceramic cartridge. Maximum temperature limit stop Installed on right wall	$ 443
1VAL300	Single hand chrome pressure balancing mixing valve suitable for commercial use. One-piece ceramic cartridge. Maximum temperature limit stop Installed on left wall	$ 443
1SH0107COMPLETE	Handheld shower assembly with 30 inch slide bar and 60 inch hose. Installed on right wall	$ 417
1SH0107COMPLETE	Handheld shower assembly with 30 inch slide bar and 60 inch hose. Installed on left wall	$ 417
S72360ROD	1” diameter Stainless Steel curtain rod for 60” model	$ 101
60CURTAIN	Curtain for 60” model Shipped loose	$ 156
1BAR109W	Stainless steel accessible 18 inch vertical grab bar, 1-1/4 inch diameter, concealed flanges All grab bars are factory installed and not sold separately. Available finishes: Stainless Steel**(SS)**, Powder Coated White **(W)**	$ 237
1BAR109SS		$ 186

OPTIONS

SKU	Description	MSRP
1BAR140W	Stainless steel accessible 24 inch grab bar, 1-1/4 inch diameter, concealed flanges All grab bars are factory installed and not sold separately. Available finishes: Stainless Steel**(SS)**, Powder Coated White **(W)**	$ 271
1BAR140SS		$ 226

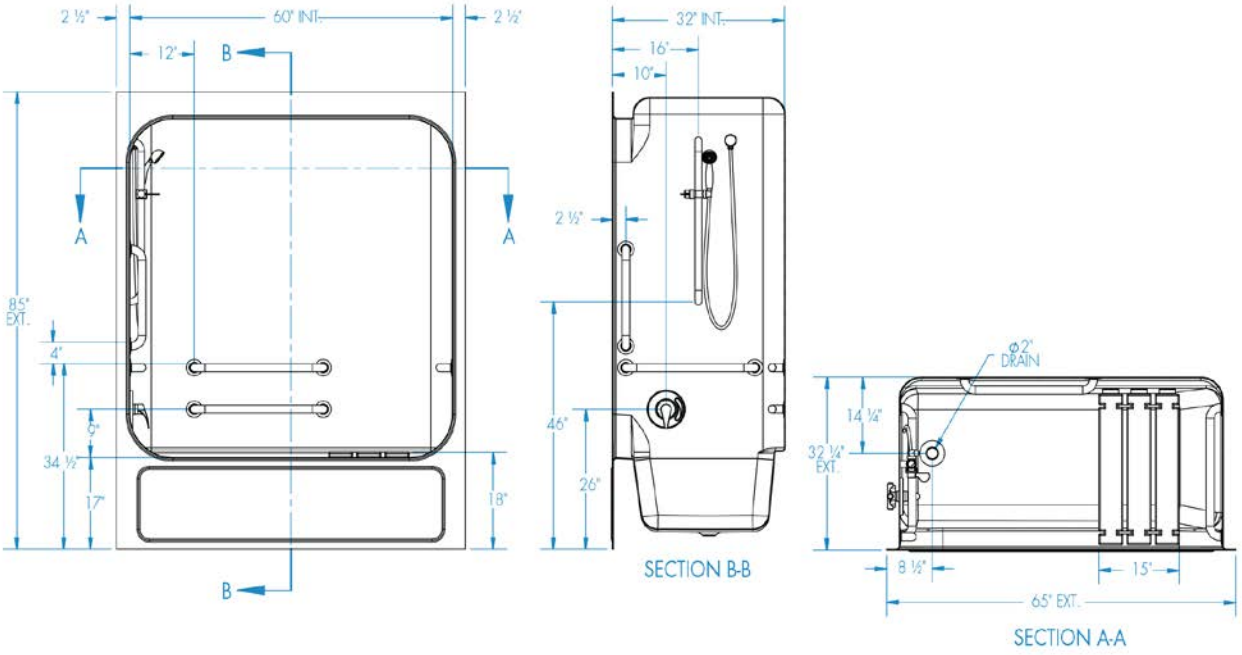
2 ½"
60" INT.
2 ½"
12"
B
A
A
85" EXT.
4"
6"
34 ½"
17"
18"
B
32" INT.
16"
10"
2 ½"
46"
26"
SECTION B-B
Ø2" DRAIN
14 ¼"
32 ¼" EXT.
8 ½"
15"
65" EXT.
SECTION A-A

F6030STT





Material : AcrylX™

Features

- 1-Piece tub shower
- Subway tile wall design is easy to clean, no messy grout
- 17 Inch Skirt
- Left or right hand drain
- Partial Reinforcement to accommodate standard grab bar locations
- Slip resistant, textured floor for safety
- AcrylX™ applied acrylic surface
- Interior dimensions: 57 Inches x 28-1/2 Inches x 74 Inches
- Exterior Dimensions: 60 in. x 31-1/4 in x 75-1/4 in.

F6030STT - PRICING CATEGORY : FL

SKU	Color	Configuration	Dimensions & Weight	MSRP
F6030STTL-AL	Almond	Base Model with Left Hand Drain with no Accessories	60” x 30” x 74” / 199 lb 1524mm x 762mm x 1880mm / 90.25 kg	$ 1377
F6030STTL-BI	Biscuit			$ 1377
F6030STTL-BO	Bone			$ 1377
F6030STTL-WH	White			$ 1342
F6030STTR-AL	Almond	Base Model with Right Hand Drain with no Accessories		$ 1377
F6030STTR-BI	Biscuit			$ 1377
F6030STTR-BO	Bone			$ 1377
F6030STTR-WH	White			$ 1342

F6030STT - ADA COMPLIANT CONFIGURATION

SKU	Color	Configuration	Dimensions & Weight	MSRP
F6030STTL-AL	Almond	Right Drain ADA Compliant Configuration	60” x 30” x 74” / 199 lb 1524mm x 762mm x 1880mm / 90.25 kg	$ 3853
F6030STTL-BI	Biscuit	Left Drain ADA Compliant Configuration		$ 3853
F6030STTL-BO	Bone			$ 3853
F6030STTL-WH	White			$ 3818
F6030STTR-BI	Biscuit	Right Drain ADA Compliant Configuration		$ 3853
F6030STTR-BO	Bone			$ 3853
F6030STTR-WH	White			$ 3818

F6030STT - ANSI COMPLIANT CONFIGURATION

SKU	Color	Configuration	Dimensions & Weight	MSRP
F6030STTL-AL	Almond	Right Drain ANSI Compliant Configuration	60” x 30” x 74” / 199 lb 1524mm x 762mm x 1880mm / 90.25 kg	$ 4039
F6030STTL-BI	Biscuit			$ 4039
F6030STTL-BO	Bone			$ 4039
F6030STTL-WH	White			$ 4004
F6030STTR-AL	Almond	Left Drain ANSI Compliant Configuration		$ 4039
F6030STTR-BI	Biscuit			$ 4039
F6030STTR-BO	Bone			$ 4039
F6030STTR-WH	White			$ 4004

F6030STT - FOUR HORIZONTAL BARS

SKU	Color	Configuration	Dimensions & Weight	MSRP
F6030STTL-AL	Almond	Left Drain Four Horizontal Bars	60” x 30” x 74” / 199 lb 1524mm x 762mm x 1880mm / 90.25 kg	$ 2281
F6030STTL-BI	Biscuit			$ 2281
F6030STTL-BO	Bone			$ 2281
F6030STTL-WH	White			$ 2246
F6030STTR-AL	Almond	Right Drain Four Horizontal Bars		$ 2993
F6030STTR-BI	Biscuit			$ 2993
F6030STTR-BO	Bone			$ 2993
F6030STTR-WH	White			$ 2958

F6030STT - FOUR HORIZONTAL BARS AND REMOVABLE SEAT

SKU	Color	Configuration	Dimensions & Weight	MSRP
F6030STTL-AL	Almond	Left Drain Four Horizontal Bars and Removable Seat	60” x 30” x 74” / 199 lb 1524mm x 762mm x 1880mm / 90.25 kg	$ 2993
F6030STTL-BI	Biscuit			$ 2993
F6030STTL-BO	Bone			$ 2993
F6030STTL-WH	White			$ 2958
F6030STTR-AL	Almond	Right Drain Four Horizontal Bars and Removable Seat		$ 2281
F6030STTR-BI	Biscuit			$ 2281
F6030STTR-BO	Bone			$ 2281
F6030STTR-WH	White			$ 2246

OPTIONS

SKU	Description	MSRP
DDWO-PC	Designer drain waste & overflow kit Available finishes: White **(WH)**, Bone **(BO)**, Polished Chrome **(PC)**, Polished Brass**(PB)**, Brushed Nickel**(BN)**,	$ 288
DDWO-PB	Designer drain waste & overflow kit Available finishes: White **(WH)**, Bone **(BO)**, Polished Chrome **(PC)**, Polished Brass**(PB)**, Brushed Nickel**(BN)**,	$ 288
DDWO-BO	Designer drain waste & overflow kit Available finishes: White **(WH)**, Bone **(BO)**, Polished Chrome **(PC)**, Polished Brass**(PB)**, Brushed Nickel**(BN)**,	$ 288

OPTIONS

SKU	Description	MSRP
DDWO-WH	Designer drain waste & overflow kit Available finishes: White **(WH)**, Bone **(BO)**, Polished Chrome **(PC)**, Polished Brass**(PB)**, Brushed Nickel**(BN)**,	$ 288
DDWO-BN		$ 288
1S2815TRIFOLD	White tri-fold removable seat for tub shower	$ 712
S7050SEATR	End mountfold-up phenolic seat with slats for drainage (factory installed) Installed on Right side	$ 829
S7050SEATL	End mountfold-up phenolic seat with slats for drainage (factory installed) Installed on Left side	$ 829
1VAL300	Single hand chrome pressure balancing mixing valve suitable for commercial use. One-piece ceramic cartridge. Maximum temperature limit stop Installed on right wall	$ 443
1VAL300	Single hand chrome pressure balancing mixing valve suitable for commercial use. One-piece ceramic cartridge. Maximum temperature limit stop Installed on left wall	$ 443
1SH0107COMPLETE	Handheld shower assembly with 30 inch slide bar and 60 inch hose. Installed on right wall	$ 417
1SH0107COMPLETE	Handheld shower assembly with 30 inch slide bar and 60 inch hose. Installed on left wall	$ 417
S72360ROD	1” diameter Stainless Steel curtain rod for 60” model	$ 101
35RKBO	Finish repair kit - Case of 12 Available in White **(WH)**, or Bone **(BO)**,	$ 303
35RKWH		$ 303
1BAR109W	Stainless steel accessible 18 inch vertical grab bar, 1-1/4 inch diameter, concealed flanges All grab bars are factory installed and not sold separately. Available finishes: Stainless Steel**(SS)**, Powder Coated White **(W)**	$ 237
1BAR109SS		$ 186
1BAR140W	Stainless steel accessible 24 inch grab bar, 1-1/4 inch diameter, concealed flanges All grab bars are factory installed and not sold separately. Available finishes: Stainless Steel**(SS)**, Powder Coated White **(W)**	$ 271
1BAR140SS		$ 226

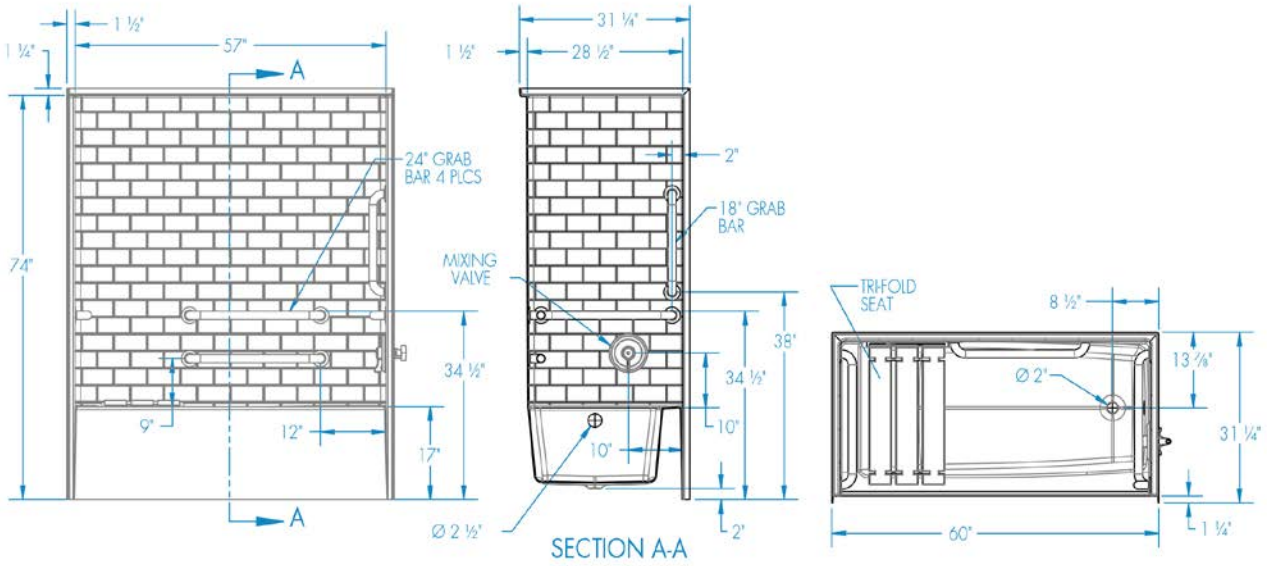
1 ½"
1 ¼"
57"
A
74"
24" GRAB BAR 4 PLCS
34 ½"
9"
12"
17"
A
Ø 2 ½"
31 ¼"
1 ½"
28 ½"
2"
18" GRAB BAR
MIXING VALVE
38"
34 ½"
10"
10"
2"
SECTION A-A
TRI-FOLD SEAT
8 ½"
13 ⅞"
Ø 2"
31 ¼"
60"
1 ¼"

F6032STT





Material : AcrylX™

Features

- 1-Piece tub shower
- Subway tile wall design is easy to clean, no messy grout
- 18 Inch Skirt
- Left or right hand drain
- Partial Reinforcement to accommodate standard grab bar locations
- Slip resistant, textured floor for safety
- AcrylX™ applied acrylic surface
- Interior dimensions: 56 Inches x 30 Inches x 78-3/8 Inches
- Exterior Dimensions: 60 in. x 33-1/4 in x 81-1/4 in.

F6032STT - PRICING CATEGORY : FL

SKU	Color	Configuration	Dimensions & Weight	MSRP
F6032STTL-AL	Almond	Base Model with Left Hand Drain with no Accessories	60” x 30” x 78” / 199 lb 1524mm x 762mm x 1981mm / 90.25 kg	$ 1413
F6032STTL-BI	Biscuit			$ 1413
F6032STTL-BO	Bone			$ 1413
F6032STTL-WH	White			$ 1378
F6032STTR-AL	Almond	Base Model with Right Hand Drain with no Accessories		$ 1413
F6032STTR-BI	Biscuit			$ 1413
F6032STTR-BO	Bone			$ 1413
F6032STTR-WH	White			$ 1378

F6032STT - ADA COMPLIANT CONFIGURATION

SKU	Color	Configuration	Dimensions & Weight	MSRP
F6032STTL-AL	Almond	Left Drain ADA Compliant Configuration	60” x 30” x 78” / 199 lb 1524mm x 762mm x 1981mm / 90.25 kg	$ 3889
F6032STTL-BI	Biscuit			$ 3889
F6032STTL-BO	Bone			$ 3889
F6032STTL-WH	White			$ 3854
F6032STTR-AL	Almond	Right Drain ADA Compliant Configuration		$ 3889
F6032STTR-BI	Biscuit			$ 3889
F6032STTR-BO	Bone			$ 3889
F6032STTR-WH	White			$ 3854

F6032STT - ANSI COMPLIANT CONFIGURATION

SKU	Color	Configuration	Dimensions & Weight	MSRP
F6032STTL-AL	Almond	Right Drain ANSI Compliant Configuration	60” x 30” x 78” / 199 lb 1524mm x 762mm x 1981mm / 90.25 kg	$ 4075
F6032STTL-BI	Biscuit			$ 4075
F6032STTL-BO	Bone			$ 4075
F6032STTL-WH	White			$ 4040
F6032STTR-AL	Almond	Left Drain ANSI Compliant Configuration		$ 4075
F6032STTR-BI	Biscuit			$ 4075
F6032STTR-BO	Bone			$ 4075
F6032STTR-WH	White			$ 4040

F6032STT - FOUR HORIZONTAL BARS

SKU	Color	Configuration	Dimensions & Weight	MSRP
F6032STTL-AL	Almond	Left Drain Four Horizontal Bars	60” x 30” x 78” / 199 lb 1524mm x 762mm x 1981mm / 90.25 kg	$ 2317
F6032STTL-BI	Biscuit			$ 2317
F6032STTL-BO	Bone			$ 2317
F6032STTL-WH	White			$ 2282
F6032STTR-AL	Almond	Right Drain Four Horizontal Bars		$ 2317
F6032STTR-BI	Biscuit			$ 2317
F6032STTR-BO	Bone			$ 2317
F6032STTR-WH	White			$ 2282

F6032STT - FOUR HORIZONTAL BARS AND REMOVABLE SEAT

SKU	Color	Configuration	Dimensions & Weight	MSRP
F6032STTL-AL	Almond	Left Drain Four Horizontal Bars and Removable Seat	60” x 30” x 78” / 199 lb 1524mm x 762mm x 1981mm / 90.25 kg	$ 3029
F6032STTL-BI	Biscuit			$ 3029
F6032STTR-AL	Almond	Right Drain Four Horizontal Bars and Removable Seat		$ 3029
F6032STTR-BI	Biscuit			$ 3029
F6032STTR-BO	Bone			$ 3029
F6032STTR-WH	White	Left Drain Four Horizontal Bars and Removable Seat		$ 2994

OPTIONS

SKU	Description	MSRP
DDWO-PC	Designer drain waste & overflow kit Available finishes: White **(WH)**, Bone **(BO)**, Polished Chrome **(PC)**, Polished Brass**(PB)**, Brushed Nickel**(BN)**,	$ 288
DDWO-PB	Designer drain waste & overflow kit Available finishes: White **(WH)**, Bone **(BO)**, Polished Chrome **(PC)**, Polished Brass**(PB)**, Brushed Nickel**(BN)**,	$ 288
DDWO-BO	Designer drain waste & overflow kit Available finishes: White **(WH)**, Bone **(BO)**, Polished Chrome **(PC)**, Polished Brass**(PB)**, Brushed Nickel**(BN)**,	$ 288
DDWO-WH		$ 288
DDWO-BN		$ 288

OPTIONS

SKU	Description	MSRP
DLN1	Ships ready to install - 120 Volt	$ 228
1S2815TRIFOLD	White tri-fold removable seat for tub shower	$ 712
S7050SEATR	End mountfold-up phenolic seat with slats for drainage (factory installed) Installed on Right side	$ 829
S7050SEATL	End mountfold-up phenolic seat with slats for drainage (factory installed) Installed on Left side	$ 829
1VAL300	Single hand chrome pressure balancing mixing valve suitable for commercial use. One-piece ceramic cartridge. Maximum temperature limit stop Installed on right wall	$ 443
1VAL300	Single hand chrome pressure balancing mixing valve suitable for commercial use. One-piece ceramic cartridge. Maximum temperature limit stop Installed on left wall	$ 443
1SH0107COMPLETE	Handheld shower assembly with 30 inch slide bar and 60 inch hose. Installed on right wall	$ 417
1SH0107COMPLETE	Handheld shower assembly with 30 inch slide bar and 60 inch hose. Installed on left wall	$ 417
S72360ROD	1” diameter Stainless Steel curtain rod for 60” model	$ 101
60CURTAIN	Curtain for 60” model Shipped loose	$ 156
35RKBO	Finish repair kit - Case of 12 Available in White **(WH)**, or Bone **(BO)**,	$ 303
35RKWH		$ 303
1BAR109W	Stainless steel accessible 18 inch vertical grab bar, 1-1/4 inch diameter, concealed flanges All grab bars are factory installed and not sold separately. Available finishes: Stainless Steel**(SS)**, Powder Coated White **(W)**	$ 237
1BAR109SS		$ 186
1BAR140W	Stainless steel accessible 24 inch grab bar, 1-1/4 inch diameter, concealed flanges All grab bars are factory installed and not sold separately. Available finishes: Stainless Steel**(SS)**, Powder Coated White **(W)**	$ 271
1BAR140SS		$ 226

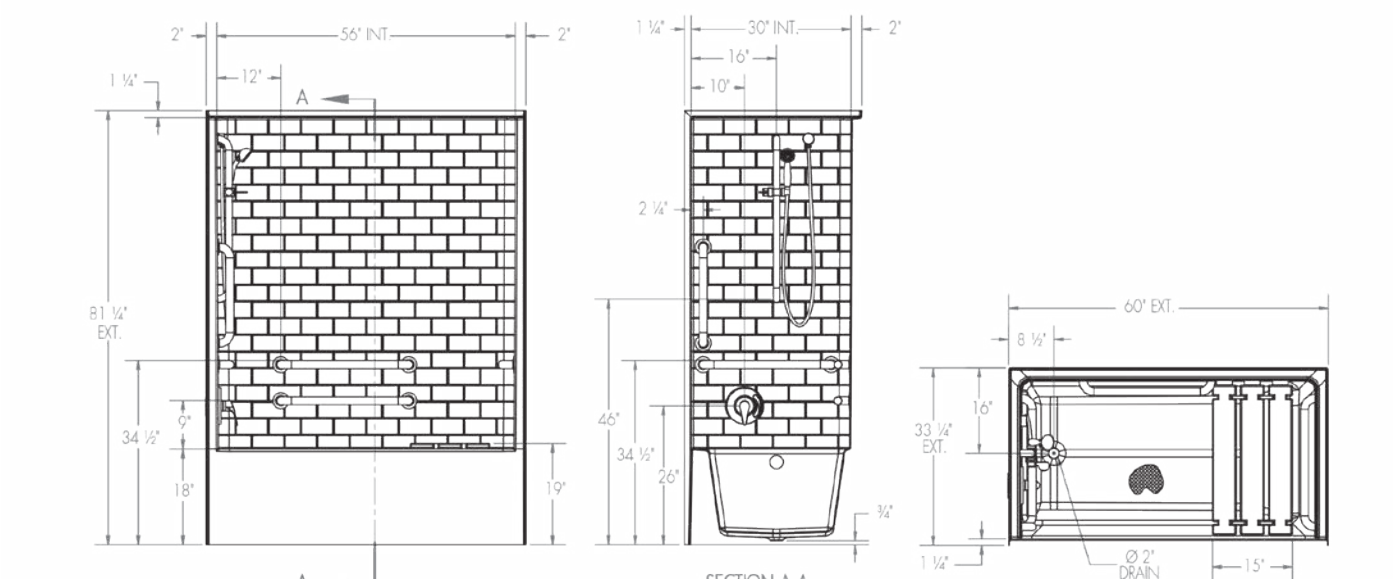
2"
56" INT.
2"
1 ¼"
12"
A
81 ¼"
EXT.
34 ½"
9"
18"
19"
1 ¼"
30" INT.
2"
16"
10"
2 ¼"
46"
34 ½"
26"
¾"
60" EXT.
8 ½"
16"
33 ¼"
EXT.
1 ¼"
Ø 2"
DRAIN
15"

EVERYDAY SERIES PRODUCTS



254027





Material : AcrylX™

Max: 40 Gal

Features

- Alcove bath
- Ergonomic backrest for bathing comfort for bathing comfort
- Integral tiling flange (3T) acts as a moisture barrier
- Integral skirt
- Slip-resistant textured floor for safety
- Left or right hand drain
- AcrylX™ applied acrylic surface

254027 - PRICING CATEGORY : EF

SKU	System	Color	Configuration	Dimensions & Weight	MSRP
254027L-AL	Soaker - No System	Almond	Left-hand Drain	54” x 27 1/8” x 15” / 52 lb 1372mm x 689mm x 381mm / 23.58 kg	$ 670
254027L-BI		Biscuit			$ 670
254027L-BK		Black			$ 990
254027L-BO		Bone			$ 990
254027L-LN		Linen			$ 635
254027L-ME		Mexican Sand			$ 990
254027L-SD		Sandbar			$ 670
254027L-ST		Sterling Silver			$ 990
254027L-WH		White			$ 670
254027R-AL		Almond	Right-hand Drain		$ 670
254027R-BI		Biscuit			$ 670
254027R-BK		Black			$ 990
254027R-BO		Bone			$ 990
254027R-LN		Linen			$ 635
254027R-ME		Mexican Sand			$ 990
254027R-SD		Sandbar			$ 670
254027R-ST		Sterling Silver			$ 990
254027R-WH		White			$ 670

OPTIONS

SKU	Description	MSRP
DDWO-PC	Designer drain waste & overflow kit Available finishes: White **(WH)**, Bone **(BO)**, Polished Chrome **(PC)**, Polished Brass**(PB)**, Brushed Nickel**(BN)**,	$ 288
DDWO-PB	Designer drain waste & overflow kit Available finishes: White **(WH)**, Bone **(BO)**, Polished Chrome **(PC)**, Polished Brass**(PB)**, Brushed Nickel**(BN)**,	$ 288
DDWO-BO	Designer drain waste & overflow kit Available finishes: White **(WH)**, Bone **(BO)**, Polished Chrome **(PC)**, Polished Brass**(PB)**, Brushed Nickel**(BN)**,	$ 288
DDWO-WH		$ 288
DDWO-BN		$ 288
35RKBO	Finish repair kit - Case of 12 Available in White **(WH)**, or Bone **(BO)**,	$ 303
35RKWH		$ 303

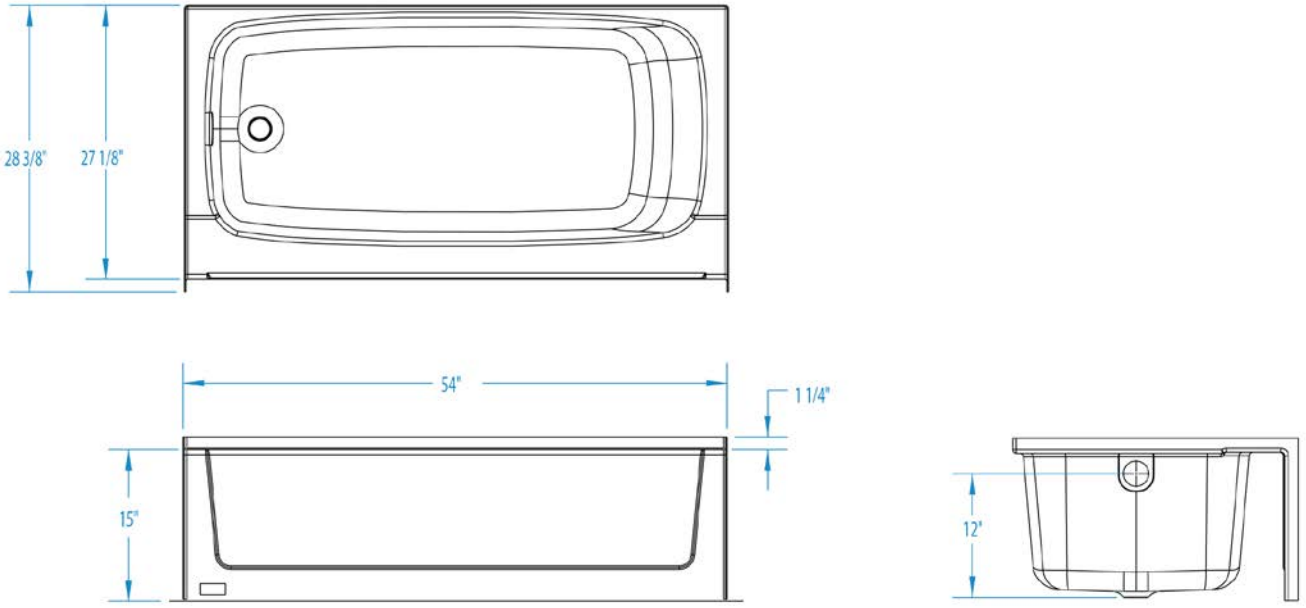
28 3/8"
27 1/8"
54"
1 1/4"
15"
12"

254027M AFR





Material : AcrylX™

Max: 40 Gal

Features

- Alcove bath
- Integral tiling flange (3T) acts as a moisture barrier
- Integral skirt
- This AFR unit accommodates the installation of drain, waste and overflow above the floor
- Slip-resistant textured floor for safety
- Left or right hand drain
- AcrylX™ applied acrylic surface

254027M AFR - PRICING CATEGORY : EF

SKU	System	Color	Configuration	Dimensions & Weight	MSRP
254027ML-AL	Soaker - No System	Almond	Left-hand Drain	54” x 27 1/8” x 18” / 52 lb 1372mm x 689mm x 457mm / 28.12 kg	$ 769
254027ML-BI		Biscuit			$ 769
254027ML-BK		Black			$ 1089
254027ML-BO		Bone			$ 769
254027ML-LN		Linen			$ 769
254027ML-ME		Mexican Sand			$ 1089
254027ML-SD		Sandbar			$ 1089
254027ML-ST		Sterling Silver			$ 1089
254027ML-WH		White			$ 734
254027MR-AL		Almond	Right-hand Drain		$ 769
254027MR-BI		Biscuit			$ 769
254027MR-BK		Black			$ 1089
254027MR-BO		Bone			$ 769
254027MR-LN		Linen			$ 769
254027MR-ME		Mexican Sand			$ 1089
254027MR-SD		Sandbar			$ 1089
254027MR-ST		Sterling Silver			$ 1089
254027MR-WH		White			$ 734

OPTIONS

SKU	Description	MSRP
DDWO-PC	Designer drain waste & overflow kit Available finishes: White **(WH)**, Bone **(BO)**, Polished Chrome **(PC)**, Polished Brass**(PB)**, Brushed Nickel**(BN)**,	$ 288
DDWO-PB	Designer drain waste & overflow kit Available finishes: White **(WH)**, Bone **(BO)**, Polished Chrome **(PC)**, Polished Brass**(PB)**, Brushed Nickel**(BN)**,	$ 288
DDWO-BO	Designer drain waste & overflow kit Available finishes: White **(WH)**, Bone **(BO)**, Polished Chrome **(PC)**, Polished Brass**(PB)**, Brushed Nickel**(BN)**,	$ 288
DDWO-WH		$ 288
DDWO-BN		$ 288
35RKBO	Finish repair kit - Case of 12 Available in White **(WH)**, or Bone **(BO)**,	$ 303
35RKWH		$ 303

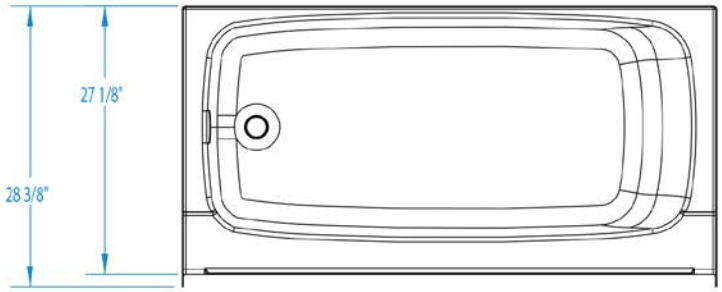

AFR: Allows for above the floor installation of waste, overflow and drainage.

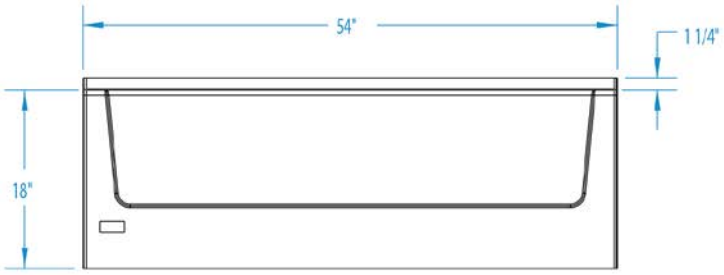

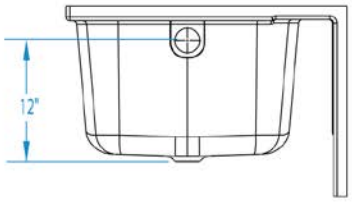

2540CCS





Material : AcrylX™

Min: 36 Gal
Max: 47 Gal

Features

- Corner bath
- Ergonomic backrest for bathing comfort
- Integral tiling flange (2T) acts as a moisture barrier
- Integral skirt
- Molded toiletry shelf
- Slip-resistant textured floor for safety
- Center rear drain
- AcrylX™ applied acrylic surface
- Whirlpool Features:
- Whirlpool pump
- 4 directional hydrotherapy jets
- Pneumatic on/off control
- Color matched trim
- Advanced safety suction system

2540CCS - PRICING CATEGORY : EH

SKU	System	Color	Configuration	Dimensions & Weight	MSRP
2540CCS-AL	Soaker - No System	Almond	Back Center Drain	55 1/4" x 33 5/8" x 23 1/4" / 125 lb 1403mm x 854mm x 591mm / 56.69 kg	$ 1310
2540CCS-BI		Biscuit			$ 1310
2540CCS-BK		Black			$ 1630
2540CCS-BO		Bone			$ 1310
2540CCS-LN		Linen			$ 1310
2540CCS-ME		Mexican Sand			$ 1630
2540CCS-SD		Sandbar			$ 1630
2540CCS-ST		Sterling Silver			$ 1630
2540CCS-WH		White			$ 1275
2540CCSWP-BI	Whirlpool Massage	Biscuit		55 1/4" x 33 5/8" x 23 1/4" / 175 lb 1403mm x 854mm x 591mm / 56.69 kg	$ 2867
2540CCSWP-LN		Linen			$ 2867
2540CCSWP-WH		White			$ 2832

OPTIONS

SKU	Description	MSRP
DDWO-PC	Designer drain waste & overflow kit Available finishes: White **(WH)**, Bone **(BO)**, Polished Chrome **(PC)**, Polished Brass**(PB)**, Brushed Nickel**(BN)**,	$ 288

OPTIONS

SKU	Description	MSRP
DDWO-PB	Designer drain waste & overflow kit Available finishes: White **(WH)**, Bone **(BO)**, Polished Chrome **(PC)**, Polished Brass**(PB)**, Brushed Nickel**(BN)**,	$ 288
DDWO-BO	Designer drain waste & overflow kit Available finishes: White **(WH)**, Bone **(BO)**, Polished Chrome **(PC)**, Polished Brass**(PB)**, Brushed Nickel**(BN)**,	$ 288
DDWO-WH		$ 288
DDWO-BN		$ 288
35RKBO	Finish repair kit - Case of 12 Available in White **(WH)**, or Bone **(BO)**,	$ 303
35RKWH		$ 303
CPOPBK1	Removable soft bath pillow Available colors: Black **(BK)**, White **(WH)**,	$ 115
CPOPWH1		$ 115
1616RSP	Convenient access panel Whirlpool option only	$ 207
PLL2	Pump location is applicable to whirlpools and blower location for air system No charge option Refer to technical drawing for applicable choices	$ 0

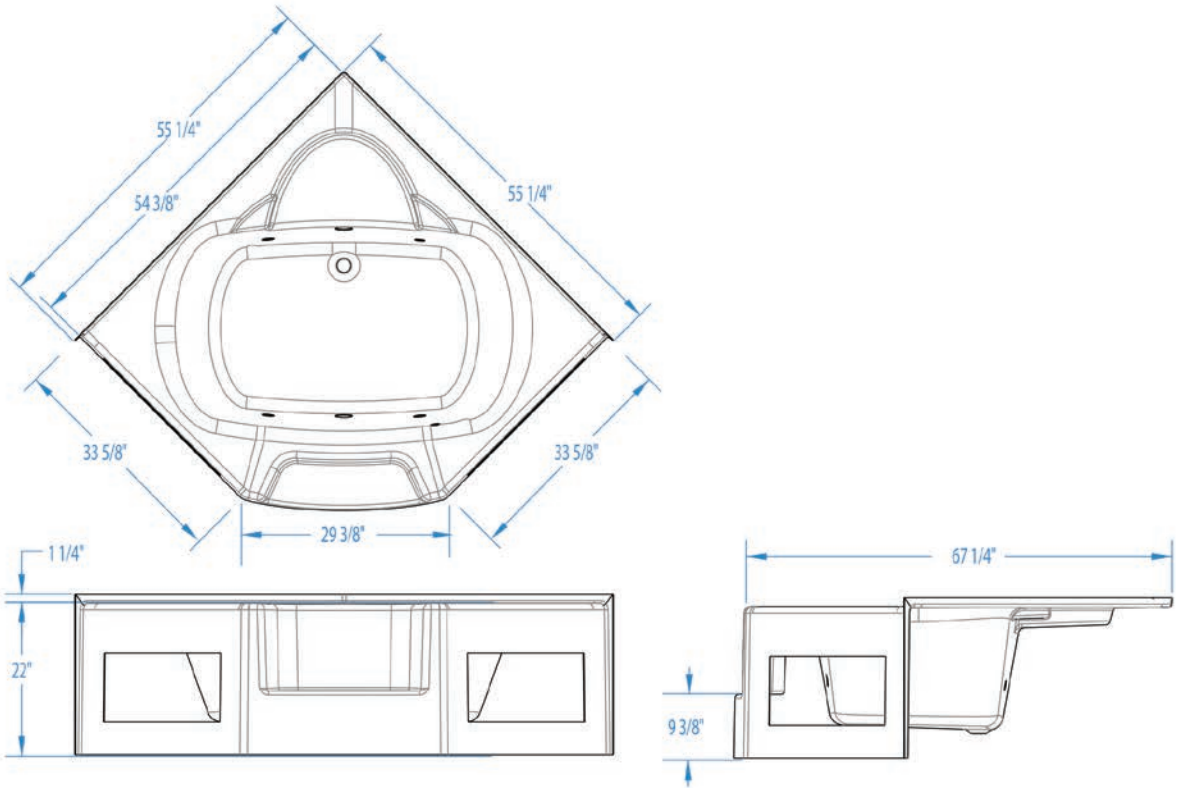
55 1/4"
54 3/8"
55 1/4"
33 5/8"
33 5/8"
29 3/8"
1 1/4"
22"
67 1/4"
9 3/8"

260030





Material : AcrylX™

Max: 50 Gal

Features

- Alcove bath
- Integral tiling flange (3T) acts as a moisture barrier
- Integral skirt
- Slip-resistant textured floor for safety
- Left or right hand drain
- AcrylX™ applied acrylic surface

260030 - PRICING CATEGORY : EF

SKU	System	Color	Configuration	Dimensions & Weight	MSRP
260030L-AL	Soaker - No System	Almond	Left-hand Drain	60” x 30” x 15” / 60 lb 1524mm x 762mm x 381mm / 27.21 kg	$ 686
260030L-BI		Biscuit			$ 686
260030L-BK		Black			$ 1006
260030L-BO		Bone			$ 686
260030L-LN		Linen			$ 686
260030L-ME		Mexican Sand			$ 1006
260030L-SD		Sandbar			$ 1006
260030L-ST		Sterling Silver			$ 1006
260030L-WH		White			$ 651
260030R-AL		Almond	Right-hand Drain		$ 686
260030R-BI		Biscuit			$ 686
260030R-BK		Black			$ 1006
260030R-BO		Bone			$ 686
260030R-LN		Linen			$ 686
260030R-ME		Mexican Sand			$ 1006
260030R-SD		Sandbar			$ 1006
260030R-ST		Sterling Silver			$ 1006
260030R-WH		White			$ 651

OPTIONS

SKU	Description	MSRP
DDWO-PC	Designer drain waste & overflow kit Available finishes: White **(WH)**, Bone **(BO)**, Polished Chrome **(PC)**, Polished Brass**(PB)**, Brushed Nickel**(BN)**,	$ 288
DDWO-PB	Designer drain waste & overflow kit Available finishes: White **(WH)**, Bone **(BO)**, Polished Chrome **(PC)**, Polished Brass**(PB)**, Brushed Nickel**(BN)**,	$ 288
DDWO-BO	Designer drain waste & overflow kit Available finishes: White **(WH)**, Bone **(BO)**, Polished Chrome **(PC)**, Polished Brass**(PB)**, Brushed Nickel**(BN)**,	$ 288
DDWO-WH		$ 288
DDWO-BN		$ 288
35RKBO	Finish repair kit - Case of 12 Available in White **(WH)**, or Bone **(BO)**,	$ 303
35RKWH		$ 303

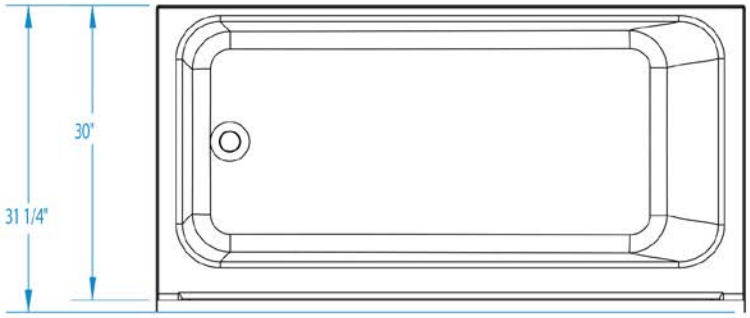
30"
31 1/4"

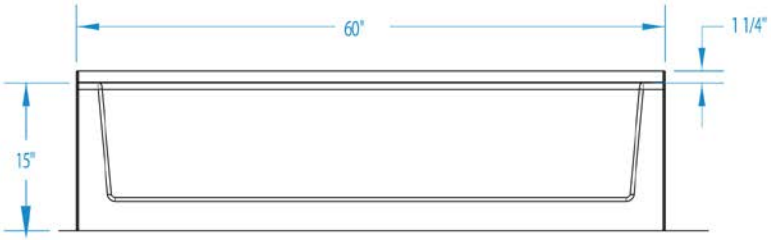
60"
1 1/4"
15"

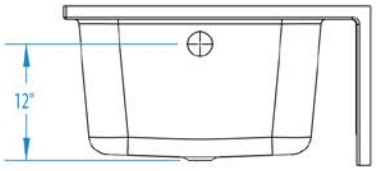
12"

260030M AFR





Material : AcrylX™

Max: 50 Gal

Features

- Alcove bath
- Integral tiling flange (3T) acts as a moisture barrier
- Integral skirt
- This AFR unit accommodates the installation of drain, waste and overflow above the floor
- Slip-resistant textured floor for safety
- Left or right hand drain
- AcrylX™ applied acrylic surface

260030M AFR - PRICING CATEGORY : EF

SKU	System	Color	Configuration	Dimensions & Weight	MSRP
260030ML-AL	Soaker - No System	Almond	Left-hand Drain	60” x 30” x 18” / 60 lb 1524mm x 762mm x 457mm / 27.21 kg	$ 726
260030ML-BI		Biscuit			$ 726
260030ML-BK		Black			$ 1046
260030ML-BO		Bone			$ 726
260030ML-LN		Linen			$ 726
260030ML-ME		Mexican Sand			$ 1046
260030ML-SD		Sandbar			$ 1046
260030ML-ST		Sterling Silver			$ 1046
260030ML-WH		White			$ 691
260030MR-AL		Almond	Right-hand Drain		$ 726
260030MR-BI		Biscuit			$ 726
260030MR-BK		Black			$ 1046
260030MR-BO		Bone			$ 726
260030MR-LN		Linen			$ 726
260030MR-ME		Mexican Sand			$ 1046
260030MR-SD		Sandbar			$ 1046
260030MR-ST		Sterling Silver			$ 1046
260030MR-WH		White			$ 691

OPTIONS

SKU	Description	MSRP
DDWO-PC	Designer drain waste & overflow kit Available finishes: White **(WH)**, Bone **(BO)**, Polished Chrome **(PC)**, Polished Brass**(PB)**, Brushed Nickel**(BN)**,	$ 288
DDWO-PB	Designer drain waste & overflow kit Available finishes: White **(WH)**, Bone **(BO)**, Polished Chrome **(PC)**, Polished Brass**(PB)**, Brushed Nickel**(BN)**,	$ 288
DDWO-BO	Designer drain waste & overflow kit Available finishes: White **(WH)**, Bone **(BO)**, Polished Chrome **(PC)**, Polished Brass**(PB)**, Brushed Nickel**(BN)**,	$ 288
DDWO-WH		$ 288
DDWO-BN		$ 288
35RKBO	Finish repair kit - Case of 12 Available in White **(WH)**, or Bone **(BO)**,	$ 303
35RKWH		$ 303

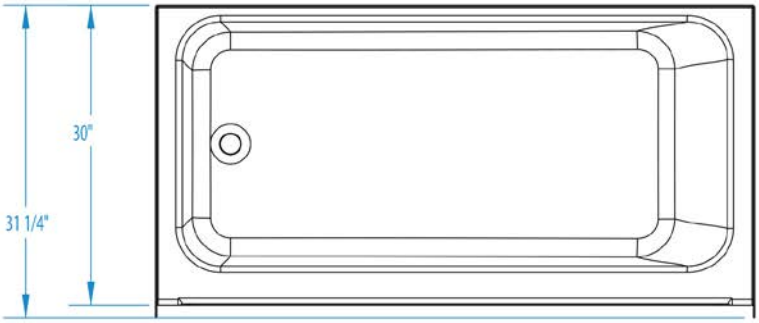

AFR: Allows for above the floor installation of waste, overflow and drainage.

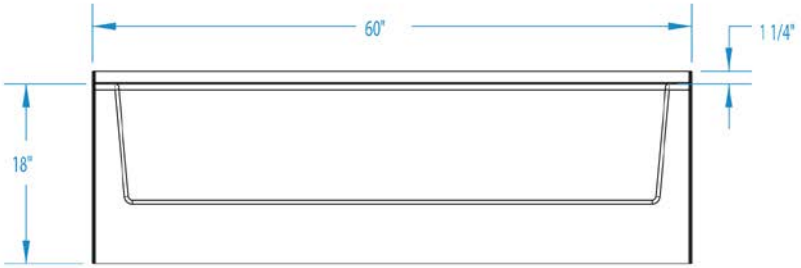

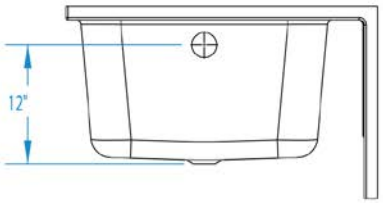

2600CBD





Material : AcrylX™

Min: 50 Gal
Max: 90 Gal

Features

- Corner design
- Integral arm rests
- Ergonomic backrest for bathing comfort
- Integral tiling flange (2T) acts as a moisture barrier
- Integral 21-1/2 in. skirt
- Molded toiletry shelf
- Slip-resistant textured floor for safety
- Center rear drain
- AcrylX™ applied acrylic surface
- East Zone Only
- Whirlpool Features:
- Whirlpool pump
- 4 directional hydrotherapy jets
- Pneumatic on/off control
- Color matched trim
- Advanced safety suction system

2600CBD - PRICING CATEGORY : EH

SKU	System	Color	Configuration	Dimensions & Weight	MSRP
2600CBD-AL	Soaker - No System	Almond	Back Center Drain	60” x 60” x 21 1/2” / 112 lb 1524mm x 1524mm x 546mm / 50.79 kg	$ 1508
2600CBD-BI		Biscuit			$ 1508
2600CBD-BK		Black			$ 1828
2600CBD-BO		Bone			$ 1508
2600CBD-LN		Linen			$ 1508
2600CBD-ME		Mexican Sand			$ 1828
2600CBD-SD		Sandbar			$ 1828
2600CBD-ST		Sterling Silver			$ 1828
2600CBD-WH		White			$ 1473
2600CBDWP-BI	Whirlpool Massage	Biscuit		60” x 60” x 21 1/2” / 162 lb 1524mm x 1524mm x 546mm / 50.79 kg	$ 3019
2600CBDWP-LN		Linen			$ 3019
2600CBDWP-WH		White			$ 2984

OPTIONS

SKU	Description	MSRP
DDWO-PC	Designer drain waste & overflow kit Available finishes: White **(WH)**, Bone **(BO)**, Polished Chrome **(PC)**, Polished Brass**(PB)**, Brushed Nickel**(BN)**,	$ 288
DDWO-PB	Designer drain waste & overflow kit Available finishes: White **(WH)**, Bone **(BO)**, Polished Chrome **(PC)**, Polished Brass**(PB)**, Brushed Nickel**(BN)**,	$ 288
DDWO-BO	Designer drain waste & overflow kit Available finishes: White **(WH)**, Bone **(BO)**, Polished Chrome **(PC)**, Polished Brass**(PB)**, Brushed Nickel**(BN)**,	$ 288
DDWO-WH		$ 288
DDWO-BN		$ 288
35RKBO	Finish repair kit - Case of 12 Available in White **(WH)**, or Bone **(BO)**,	$ 303
35RKWH		$ 303
CPOPBK1	Removable soft bath pillow Available colors: Black **(BK)**, White **(WH)**,	$ 115
CPOPWH1		$ 115
1616RSP	Convenient access panel Whirlpool option only	$ 207
PLL2	Pump location is applicable to whirlpools and blower location for air system No charge option Refer to technical drawing for applicable choices	$ 0

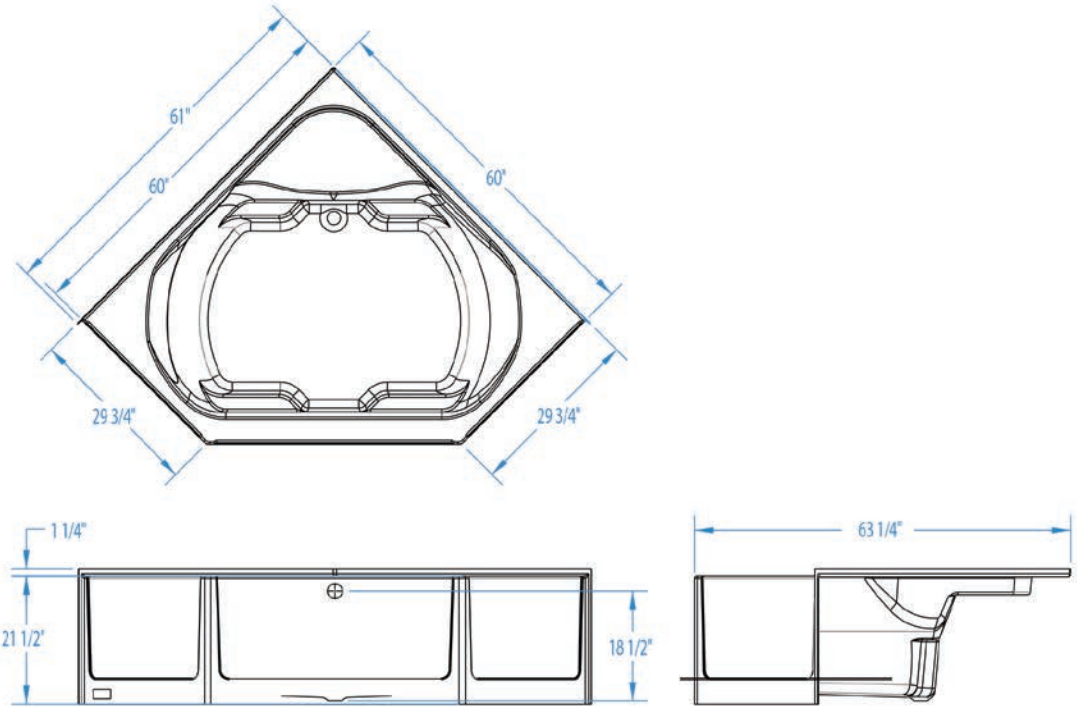
61"
60"
60"
29 3/4"
29 3/4"
1 1/4"
21 1/2"
18 1/2"
63 1/4"

2600CC



Material : AcrylX™

Min: 50 Gal
Max: 90 Gal

Features

- Corner bath
- Integral arm rests
- Ergonomic backrest for bathing comfort
- Integral tiling flange (2T) acts as a moisture barrier
- Molded toiletry shelf
- Slip-resistant textured floor for safety
- Center drain
- AcrylX™ applied acrylic surface
- Whirlpool Features:
- Whirlpool pump
- 4 directional hydrotherapy jets
- Pneumatic on/off control
- Color matched trim
- Advanced safety suction system

2600CC - PRICING CATEGORY : EH

SKU	System	Color	Configuration	Dimensions & Weight	MSRP
2600CC-AL	Soaker - No System	Almond	Center Front Drain	60” x 60” x 22” / 95 lb 1524mm x 1524mm x 559mm / 43.08 kg	$ 1372
2600CC-BI		Biscuit			$ 1372
2600CC-BK		Black			$ 1692
2600CC-BO		Bone			$ 1372
2600CC-LN		Linen			$ 1372
2600CC-ME		Mexican Sand			$ 1692
2600CC-SD		Sandbar			$ 1692
2600CC-ST		Sterling Silver			$ 1692
2600CC-WH		White			$ 1337
2600CCWP-BI	Whirlpool Massage	Biscuit		60” x 60” x 22” / 145 lb 1524mm x 1524mm x 559mm / 43.08 kg	$ 2886
2600CCWP-LN		Linen			$ 2886
2600CCWP-WH		White			$ 2851

OPTIONS

SKU	Description	MSRP
DDWO-PC	Designer drain waste & overflow kit Available finishes: White **(WH)**, Bone **(BO)**, Polished Chrome **(PC)**, Polished Brass**(PB)**, Brushed Nickel**(BN)**,	$ 288

OPTIONS

SKU	Description	MSRP
DDWO-PB	Designer drain waste & overflow kit Available finishes: White **(WH)**, Bone **(BO)**, Polished Chrome **(PC)**, Polished Brass**(PB)**, Brushed Nickel**(BN)**,	$ 288
DDWO-BO	Designer drain waste & overflow kit Available finishes: White **(WH)**, Bone **(BO)**, Polished Chrome **(PC)**, Polished Brass**(PB)**, Brushed Nickel**(BN)**,	$ 288
DDWO-WH		$ 288
DDWO-BN		$ 288
35RKBO	Finish repair kit - Case of 12 Available in White **(WH)**, or Bone **(BO)**,	$ 303
35RKWH		$ 303
CPOPBK1	Removable soft bath pillow Available colors: Black **(BK)**, White **(WH)**,	$ 115
CPOPWH1		$ 115
PLL2	Pump location is applicable to whirlpools and blower location for air system No charge option Refer to technical drawing for applicable choices	$ 0

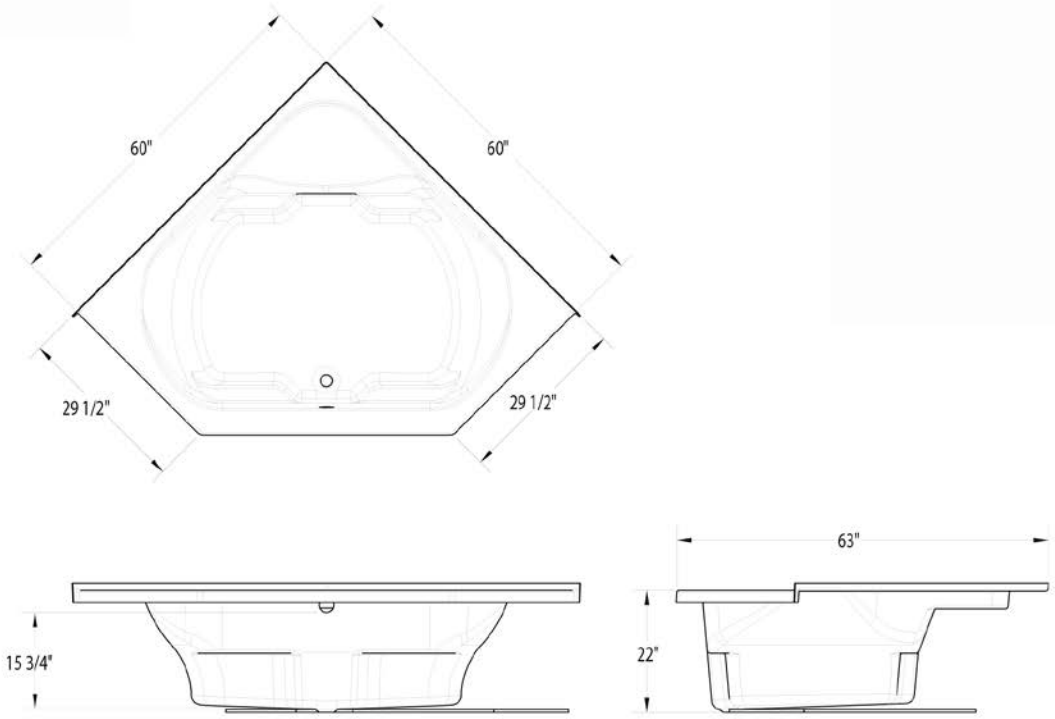
60"
60"
29 1/2"
29 1/2"
15 3/4"
63"
22"

2600CCS



Material : AcrylX™

Min: 50 Gal
Max: 90 Gal

Features

- Corner bath
- Integral arm rests
- Ergonomic backrest for bathing comfort
- Integral tiling flange (2T) acts as a moisture barrier
- Integral 24-1/2 in. skirt
- Slip-resistant textured floor for safety
- Center drain
- AcrylX™ applied acrylic surface
- Whirlpool Features:
- Whirlpool pump
- 4 directional hydrotherapy jets
- Pneumatic on/off control
- Color matched trim
- Advanced safety suction system

2600CCS - PRICING CATEGORY : EH

SKU	System	Color	Configuration	Dimensions & Weight	MSRP
2600CCS-AL	Soaker - No System	Almond	Center Front Drain	60” x 60” x 24 1/2” / 129 lb 1524mm x 1524mm x 622mm / 58.5 kg	$ 1796
2600CCS-BI		Biscuit			$ 1796
2600CCS-BK		Black			$ 2116
2600CCS-BO		Bone			$ 1796
2600CCS-LN		Linen			$ 1796
2600CCS-ME		Mexican Sand			$ 2116
2600CCS-SD		Sandbar			$ 2116
2600CCS-ST		Sterling Silver			$ 2116
2600CCS-WH		White			$ 1761
2600CCSWP-BI	Whirlpool Massage	Biscuit		60” x 60” x 24 1/2” / 179 lb 1524mm x 1524mm x 622mm / 58.5 kg	$ 3405
2600CCSWP-LN		Linen			$ 3405
2600CCSWP-WH		White			$ 3370

OPTIONS

SKU	Description	MSRP
DDWO-PC	Designer drain waste & overflow kit Available finishes: White **(WH)**, Bone **(BO)**, Polished Chrome **(PC)**, Polished Brass**(PB)**, Brushed Nickel**(BN)**,	$ 288

OPTIONS

SKU	Description	MSRP
DDWO-PB	Designer drain waste & overflow kit Available finishes: White **(WH)**, Bone **(BO)**, Polished Chrome **(PC)**, Polished Brass**(PB)**, Brushed Nickel**(BN)**,	$ 288
DDWO-BO	Designer drain waste & overflow kit Available finishes: White **(WH)**, Bone **(BO)**, Polished Chrome **(PC)**, Polished Brass**(PB)**, Brushed Nickel**(BN)**,	$ 288
DDWO-WH		$ 288
DDWO-BN		$ 288
35RKBO	Finish repair kit - Case of 12 Available in White **(WH)**, or Bone **(BO)**,	$ 303
35RKWH		$ 303
CPOPBK1	Removable soft bath pillow Available colors: Black **(BK)**, White **(WH)**,	$ 115
CPOPWH1		$ 115
1616RSP	Convenient access panel Whirlpool option only	$ 207
PLL2	Pump location is applicable to whirlpools and blower location for air system No charge option Refer to technical drawing for applicable choices	$ 0

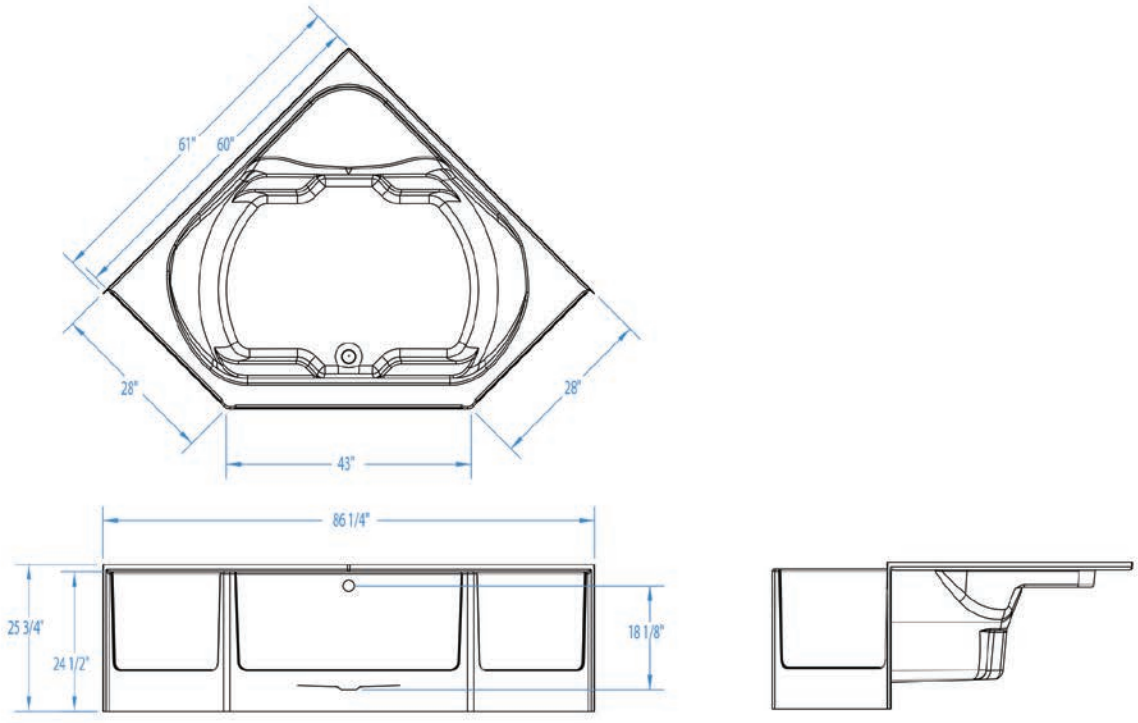
61"
60"
28"
28"
43"
86 1/4"
25 3/4"
24 1/2"
18 1/8"

2603OSN





Material : AcrylX™

Max: 49 Gal

Features

- Alcove bath
- Integral tiling flange (3T) acts as a moisture barrier
- Integral 15 in. skirt
- Molded toiletry shelves
- Slip-resistant textured floor for safety
- Left or right hand drain
- AcrylX™ applied acrylic surface

2603OSN - PRICING CATEGORY : EF

SKU	System	Color	Configuration	Dimensions & Weight	MSRP
26030SNR-BO	Soaker - No System	Bone	Right-hand Drain	60” x 36” x 15” / 68 lb 1524mm x 914mm x 381mm / 30.84 kg	$ 1141
2603OSNL-AL		Almond	Left-hand Drain		$ 1141
2603OSNL-BI		Biscuit			$ 1141
2603OSNL-BK		Black			$ 1461
2603OSNL-BO		Bone			$ 1141
2603OSNL-LN		Linen			$ 1141
2603OSNL-ME		Mexican Sand			$ 1461
2603OSNL-SD		Sandbar			$ 1461
2603OSNL-ST		Sterling Silver			$ 1461
2603OSNL-WH		White			$ 1106
2603OSNR-AL		Almond	Right-hand Drain		$ 1141
2603OSNR-BI		Biscuit			$ 1141
2603OSNR-BK		Black			$ 1461
2603OSNR-LN		Linen			$ 1141
2603OSNR-ME		Mexican Sand			$ 1461
2603OSNR-SD		Sandbar			$ 1461
2603OSNR-ST		Sterling Silver			$ 1461
2603OSNR-WH		White			$ 1106

OPTIONS

SKU	Description	MSRP
DDWO-PC	Designer drain waste & overflow kit Available finishes: White **(WH)**, Bone **(BO)**, Polished Chrome **(PC)**, Polished Brass**(PB)**, Brushed Nickel**(BN)**,	$ 288
DDWO-PB	Designer drain waste & overflow kit Available finishes: White **(WH)**, Bone **(BO)**, Polished Chrome **(PC)**, Polished Brass**(PB)**, Brushed Nickel**(BN)**,	$ 288
DDWO-BO	Designer drain waste & overflow kit Available finishes: White **(WH)**, Bone **(BO)**, Polished Chrome **(PC)**, Polished Brass**(PB)**, Brushed Nickel**(BN)**,	$ 288
DDWO-WH		$ 288
DDWO-BN		$ 288
35RKBO	Finish repair kit - Case of 12 Available in White **(WH)**, or Bone **(BO)**,	$ 303
35RKWH		$ 303

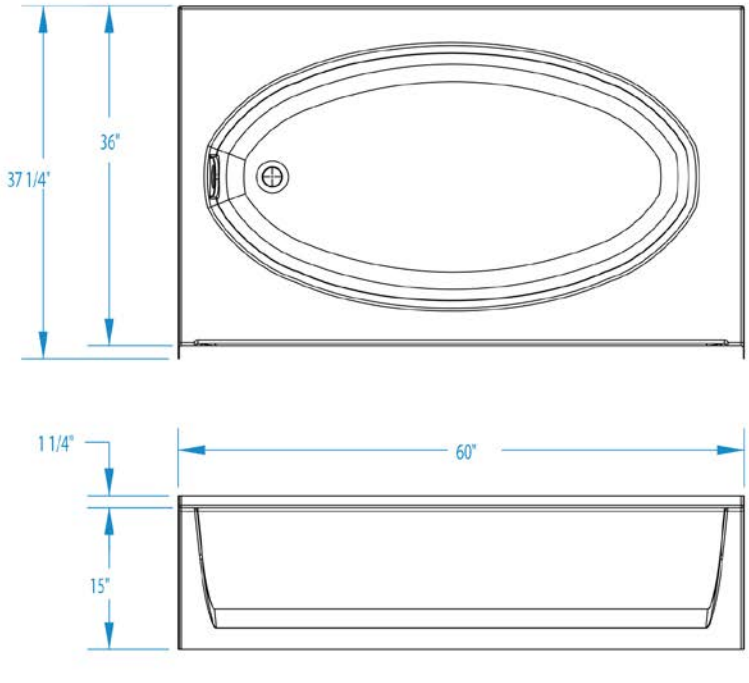
37 1/4"
36"
1 1/4"
60"
15"

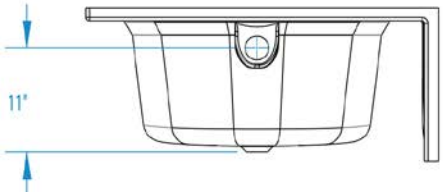
11"

2603OT





Material : AcrylX™

Max: 46 Gal

Features

- Alcove bath
- Integral tiling flange (3T) acts as a moisture barrier
- Integral 15 in. skirt
- 6 Inch wainscot
- Molded toiletry shelves
- Slip-resistant textured floor for safety
- Center rear drain
- AcrylX™ applied acrylic surface

2603OT - PRICING CATEGORY : EF

SKU	System	Color	Configuration	Dimensions & Weight	MSRP
26030T-BO	Soaker - No System	Bone	Back Center Drain	60” x 40 3/4” x 21” / 70 lb 1524mm x 1035mm x 533mm / 31.75 kg	$ 1161
2603OT-AL		Almond			$ 1161
2603OT-BI		Biscuit			$ 1161
2603OT-BK		Black			$ 1481
2603OT-LN		Linen			$ 1161
2603OT-ME		Mexican Sand			$ 1481
2603OT-SD		Sandbar			$ 1481
2603OT-ST		Sterling Silver			$ 1481
2603OT-WH		White			$ 1126

OPTIONS

SKU	Description	MSRP
DDWO-PC	Designer drain waste & overflow kit Available finishes: White **(WH)**, Bone **(BO)**, Polished Chrome **(PC)**, Polished Brass**(PB)**, Brushed Nickel**(BN)**,	$ 288
DDWO-PB	Designer drain waste & overflow kit Available finishes: White **(WH)**, Bone **(BO)**, Polished Chrome **(PC)**, Polished Brass**(PB)**, Brushed Nickel**(BN)**,	$ 288
DDWO-BO	Designer drain waste & overflow kit Available finishes: White **(WH)**, Bone **(BO)**, Polished Chrome **(PC)**, Polished Brass**(PB)**, Brushed Nickel**(BN)**,	$ 288
DDWO-WH		$ 288
DDWO-BN		$ 288
35RKBO	Finish repair kit - Case of 12 Available in White **(WH)**, or Bone **(BO)**,	$ 303

OPTIONS

SKU	Description	MSRP
35RKWH	Finish repair kit - Case of 12 Available in White **(WH)**, or Bone **(BO)**,	$ 303

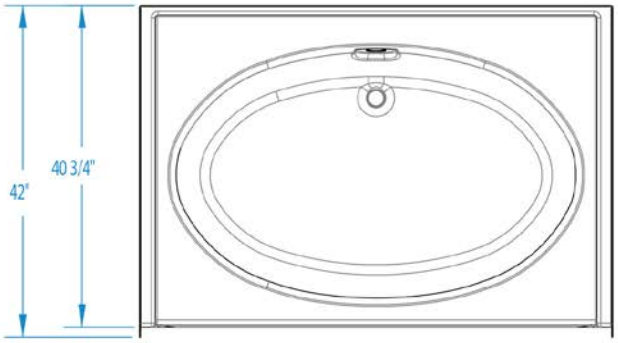
42"
40 3/4"

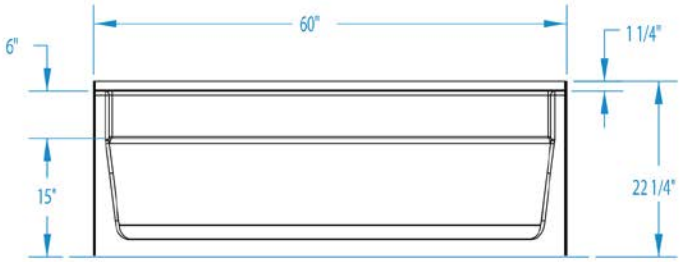
60"
6"
1 1/4"
15"
22 1/4"

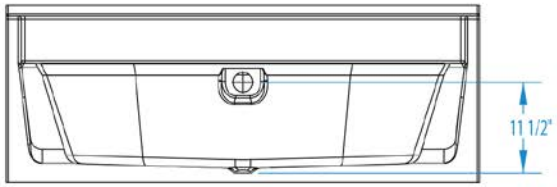
11 1/2"

2603OTM AFR



Material : AcrylX™

Max: 46 Gal

Features

- Alcove bath
- Integral tiling flange (3T) acts as a moisture barrier
- Integral 17 in. skirt
- 6 Inch wainscot
- This AFR unit accommodates the installation of drain, waste and overflow above the floor
- Slip-resistant textured floor for safety
- Center drain
- AcrylX™ applied acrylic surface

2603OTM AFR - PRICING CATEGORY : EF

SKU	System	Color	Configuration	Dimensions & Weight	MSRP
2603OTM-AL	Soaker - No System	Almond	Back Center Drain	60” x 40 3/4” x 23” / 74 lb 1524mm x 1035mm x 584mm / 33.56 kg	$ 1292
2603OTM-BI		Biscuit			$ 1292
2603OTM-BK		Black			$ 1612
2603OTM-BO		Bone			$ 1292
2603OTM-LN		Linen			$ 1292
2603OTM-ME		Mexican Sand			$ 1612
2603OTM-SD		Sandbar			$ 1612
2603OTM-ST		Sterling Silver			$ 1612
2603OTM-WH		White			$ 1257

OPTIONS

SKU	Description	MSRP
DDWO-PC	Designer drain waste & overflow kit Available finishes: White **(WH)**, Bone **(BO)**, Polished Chrome **(PC)**, Polished Brass**(PB)**, Brushed Nickel**(BN)**,	$ 288
DDWO-PB	Designer drain waste & overflow kit Available finishes: White **(WH)**, Bone **(BO)**, Polished Chrome **(PC)**, Polished Brass**(PB)**, Brushed Nickel**(BN)**,	$ 288
DDWO-BO	Designer drain waste & overflow kit Available finishes: White **(WH)**, Bone **(BO)**, Polished Chrome **(PC)**, Polished Brass**(PB)**, Brushed Nickel**(BN)**,	$ 288
DDWO-WH		$ 288
DDWO-BN		$ 288
35RKBO	Finish repair kit - Case of 12 Available in White **(WH)**, or Bone **(BO)**,	$ 303

OPTIONS

SKU	Description	MSRP
35RKWH	Finish repair kit - Case of 12 Available in White **(WH)**, or Bone **(BO)**,	$ 303

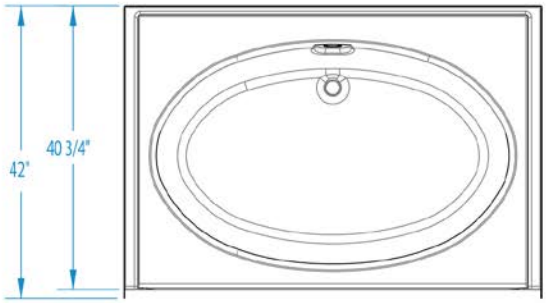

AFR: Allows for above the floor installation of waste, overflow and drainage.

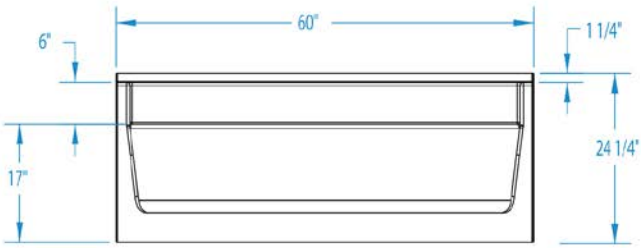

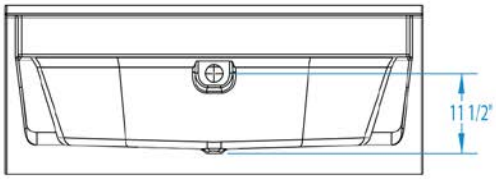

2720SK





Material : AcrylX™

Min: 60 Gal
Max: 80 Gal

Features

- Alcove bath
- Integral arm rest
- Ergonomic backrest for bathing comfort
- Integral tiling flange (3T) acts as a moisture barrier
- Integral skirt
- Slip-resistant textured floor for safety
- Left or right hand drain
- AcrylX™ applied acrylic surface
- Whirlpool Features:
- Whirlpool pump
- 4 directional hydrotherapy jets
- Pneumatic on/off control
- Color matched trim
- Advanced safety suction system

2720SK - PRICING CATEGORY : EH

SKU	System	Color	Configuration	Dimensions & Weight	MSRP
2720SKL-AL	Soaker - No System	Almond	Left-hand Drain	72” x 36” x 20” / 130 lb 1829mm x 914mm x 508mm / 58.96 kg	$ 1280
2720SKL-BI		Biscuit			$ 1280
2720SKL-BK		Black			$ 1600
2720SKL-BO		Bone			$ 1280
2720SKL-LN		Linen			$ 1280
2720SKL-ME		Mexican Sand			$ 1600
2720SKL-SD		Sandbar			$ 1600
2720SKL-ST		Sterling Silver			$ 1600
2720SKL-WH		White			$ 1245
2720SKLWP-BI	Whirlpool Massage	Biscuit			$ 3428
2720SKLWP-LN		Linen			$ 3428
2720SKLWP-WH		White			$ 3393
2720SKR-AL	Soaker - No System	Almond	Right-hand Drain		$ 1280
2720SKR-BI		Biscuit			$ 1280
2720SKR-BK		Black			$ 1600
2720SKR-BO		Bone			$ 1280
2720SKR-LN		Linen			$ 1280

2720SK - PRICING CATEGORY : EH

SKU	System	Color	Configuration	Dimensions & Weight	MSRP
2720SKR-ME	Soaker - No System	Mexican Sand	Right-hand Drain	72” x 36” x 20” / 130 lb 1829mm x 914mm x 508mm / 58.96 kg	$ 1600
2720SKR-SD		Sandbar			$ 1600
2720SKR-ST		Sterling Silver			$ 1600
2720SKR-WH		White			$ 1245
2720SKRWP-BI	Whirlpool Massage	Biscuit			$ 3428
2720SKRWP-LN		Linen			$ 3428
2720SKRWP-WH		White			$ 3393

OPTIONS

SKU	Description	MSRP
DDWO-PC	Designer drain waste & overflow kit Available finishes: White **(WH)**, Bone **(BO)**, Polished Chrome **(PC)**, Polished Brass**(PB)**, Brushed Nickel**(BN)**,	$ 288
DDWO-PB	Designer drain waste & overflow kit Available finishes: White **(WH)**, Bone **(BO)**, Polished Chrome **(PC)**, Polished Brass**(PB)**, Brushed Nickel**(BN)**,	$ 288
DDWO-BO	Designer drain waste & overflow kit Available finishes: White **(WH)**, Bone **(BO)**, Polished Chrome **(PC)**, Polished Brass**(PB)**, Brushed Nickel**(BN)**,	$ 288
DDWO-WH		$ 288
DDWO-BN		$ 288
35RKBO	Finish repair kit - Case of 12 Available in White **(WH)**, or Bone **(BO)**,	$ 303
35RKWH		$ 303
CPOPBK1	Removable soft bath pillow Available colors: Black **(BK)**, White **(WH)**,	$ 115
CPOPWH1		$ 115

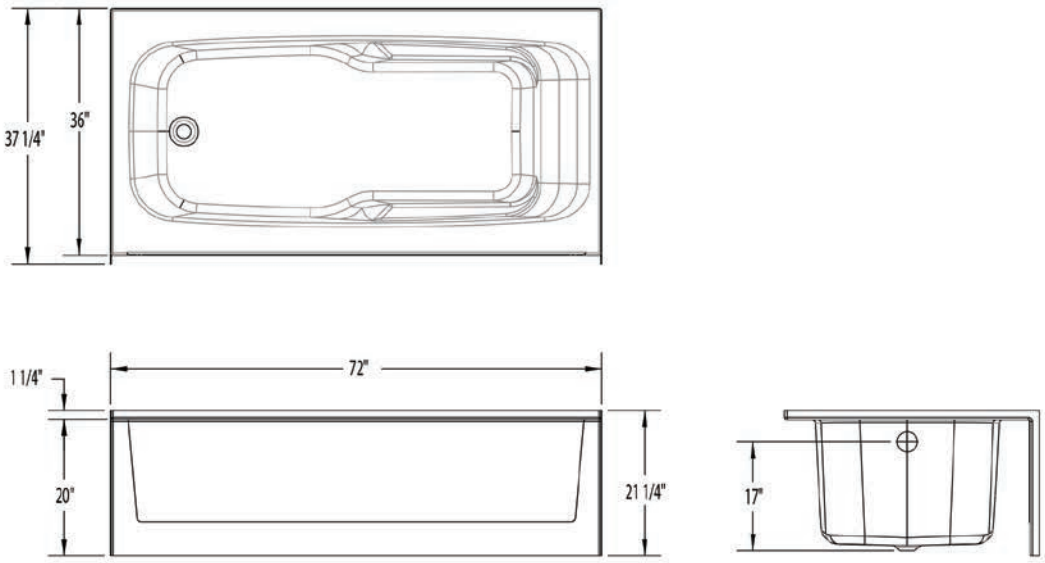
37 1/4"
36"
1 1/4"
72"
20"
21 1/4"
17"

6030SMIN



Material : AcrylX™

Max: 49 Gal

Features

- Alcove bath
- Integral 16 in. skirt
- Deep bathing well
- Ergonomic backrest for bathing comfort
- Slip-resistant textured floor for safety
- Left or right hand drain
- AcrylX™ applied acrylic surface

6030SMIN - PRICING CATEGORY : EK

SKU	System	Color	Configuration	Dimensions & Weight	MSRP
6030SMINL-AL	Soaker - No System	Almond	Left-hand Drain	60” x 30” x 16” / 55 lb 1524mm x 762mm x 406mm / 24.94 kg	$ 803
6030SMINL-BI		Biscuit			$ 803
6030SMINL-BK		Black			$ 1123
6030SMINL-BO		Bone			$ 803
6030SMINL-LN		Linen			$ 803
6030SMINL-ME		Mexican Sand			$ 1123
6030SMINL-SD		Sandbar			$ 1123
6030SMINL-ST		Sterling Silver			$ 1123
6030SMINL-WH		White			$ 768
6030SMINR-AL		Almond	Right-hand Drain		$ 803
6030SMINR-BI		Biscuit			$ 803
6030SMINR-BK		Black			$ 1123
6030SMINR-BO		Bone			$ 803
6030SMINR-LN		Linen			$ 803
6030SMINR-ME		Mexican Sand			$ 1123
6030SMINR-SD		Sandbar			$ 1123
6030SMINR-ST		Sterling Silver			$ 1123
6030SMINR-WH		White			$ 768

OPTIONS

SKU	Description	MSRP
DDWO-PC	Designer drain waste & overflow kit Available finishes: White **(WH)**, Bone **(BO)**, Polished Chrome **(PC)**, Polished Brass**(PB)**, Brushed Nickel**(BN)**,	$ 288
DDWO-PB	Designer drain waste & overflow kit Available finishes: White **(WH)**, Bone **(BO)**, Polished Chrome **(PC)**, Polished Brass**(PB)**, Brushed Nickel**(BN)**,	$ 288
DDWO-BO	Designer drain waste & overflow kit Available finishes: White **(WH)**, Bone **(BO)**, Polished Chrome **(PC)**, Polished Brass**(PB)**, Brushed Nickel**(BN)**,	$ 288
DDWO-WH		$ 288
DDWO-BN		$ 288
35RKBO	Finish repair kit - Case of 12 Available in White **(WH)**, or Bone **(BO)**,	$ 303
35RKWH		$ 303

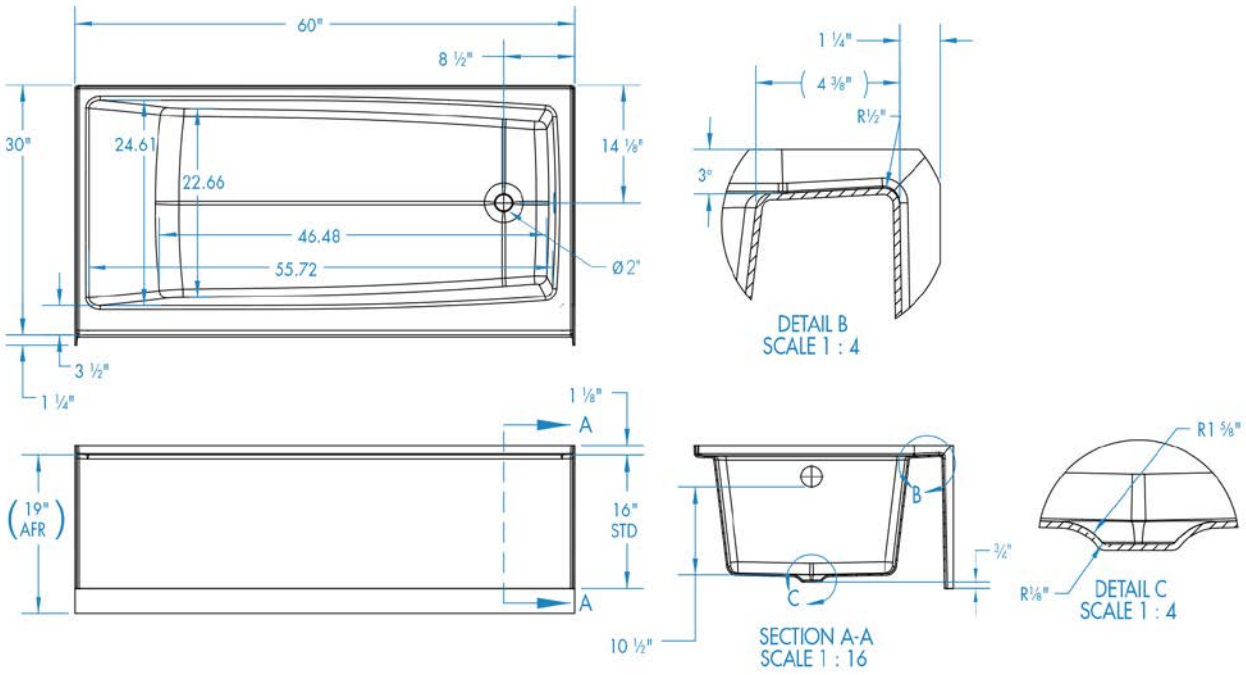
60"
8 ½"
30"
24.61
22.66
14 ⅛"
46.48
55.72
Ø2"
3 ½"
1 ¼"
1 ⅛"
A
(19" AFR)
16" STD
A
10 ½"
1 ¼"
4 ⅜"
R½"
3°
DETAIL B
SCALE 1 : 4
B
C
¾"
SECTION A-A
SCALE 1 : 16
R1 ⅝"
R⅛"
DETAIL C
SCALE 1 : 4

6030SMINM AFR





Material : AcrylX™

Max: 49 Gal

Features

- Alcove bath
- Integral 19 in. skirt
- Deep bathing well
- Ergonomic backrest for bathing comfort
- This AFR unit accommodates the installation of drain, waste and overflow above the floor
- Slip-resistant textured floor for safety
- Left or right hand drain
- AcrylX™ applied acrylic surface

6030SMINM - PRICING CATEGORY : EK

SKU	System	Color	Configuration	Dimensions & Weight	MSRP
6030SMINML-AL	Soaker - No System	Almond	Left-hand Drain	60” x 30” x 19” / 59 lb 1524mm x 762mm x 483mm / 26.76 kg	$ 841
6030SMINML-BI		Biscuit			$ 841
6030SMINML-BK		Black			$ 1161
6030SMINML-BO		Bone			$ 841
6030SMINML-LN		Linen			$ 841
6030SMINML-ME		Mexican Sand			$ 1161
6030SMINML-SD		Sandbar			$ 1161
6030SMINML-ST		Sterling Silver			$ 1161
6030SMINML-WH		White			$ 806
6030SMINMR-AL		Almond	Right-hand Drain		$ 841
6030SMINMR-BI		Biscuit			$ 841
6030SMINMR-BK		Black			$ 1161
6030SMINMR-BO		Bone			$ 841
6030SMINMR-LN		Linen			$ 841
6030SMINMR-ME		Mexican Sand			$ 1161
6030SMINMR-SD		Sandbar			$ 1161
6030SMINMR-ST		Sterling Silver			$ 1161
6030SMINMR-WH		White			$ 806

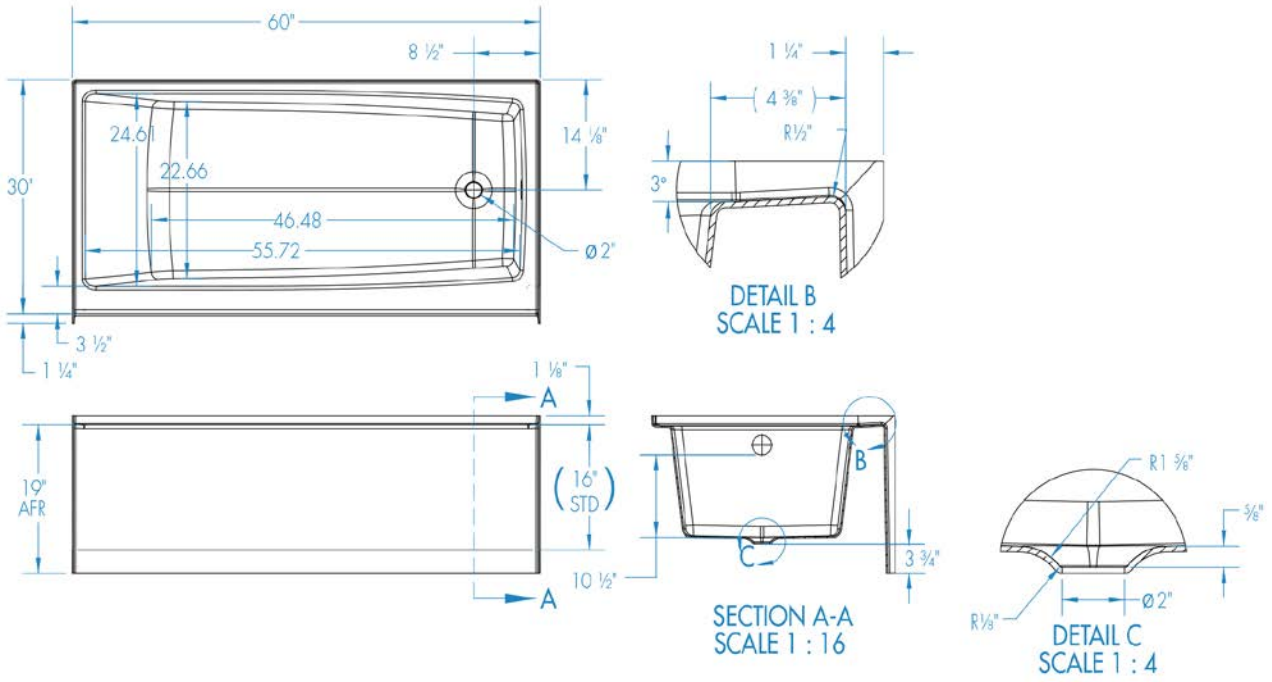
60"
8 ½"
24.61
22.66
46.48
55.72
30"
14 ⅛"
Ø 2"
3 ½"
1 ¼"
1 ¼"
(4 ⅜")
R½"
3°
DETAIL B
SCALE 1 : 4
1 ⅛"
A
19"
AFR
(16"
STD)
10 ½"
A
B
C
3 ¾"
SECTION A-A
SCALE 1 : 16
R1 ⅝"
⅝"
R⅛"
Ø 2"
DETAIL C
SCALE 1 : 4

6030STUB





Material : AcrylX™

Max: 57 Gal

Features

- Alcove bath
- Integral tiling flange (3T)
- Integral 18 Inch skirt
- 2-5/8 Inch wainscot
- Slip-resistant, textured bottom
- Left or right drain
- AcrylX™ applied acrylic surface

6030STUB - PRICING CATEGORY : EF

SKU	System	Color	Configuration	Dimensions & Weight	MSRP
6030STUBL-AL	Soaker - No System	Almond	Left-hand Drain	60” x 30” x 20 5/8” / 63 lb 1524mm x 762mm x 524mm / 28.57 kg	$ 857
6030STUBL-BI		Biscuit			$ 857
6030STUBL-BK		Black			$ 1177
6030STUBL-BO		Bone			$ 857
6030STUBL-LN		Linen			$ 857
6030STUBL-ME		Mexican Sand			$ 1177
6030STUBL-SD		Sandbar			$ 1177
6030STUBL-ST		Sterling Silver			$ 1177
6030STUBL-WH		White			$ 822
6030STUBR-AL		Almond	Right-hand Drain		$ 857
6030STUBR-BI		Biscuit			$ 857
6030STUBR-BK		Black			$ 1177
6030STUBR-BO		Bone			$ 857
6030STUBR-LN		Linen			$ 857
6030STUBR-ME		Mexican Sand			$ 1177
6030STUBR-SD		Sandbar			$ 1177
6030STUBR-ST		Sterling Silver			$ 1177
6030STUBR-WH		White			$ 822

OPTIONS

SKU	Description	MSRP
DDWO-PC	Designer drain waste & overflow kit Available finishes: White **(WH)**, Bone **(BO)**, Polished Chrome **(PC)**, Polished Brass**(PB)**, Brushed Nickel**(BN)**,	$ 288
DDWO-PB	Designer drain waste & overflow kit Available finishes: White **(WH)**, Bone **(BO)**, Polished Chrome **(PC)**, Polished Brass**(PB)**, Brushed Nickel**(BN)**,	$ 288
DDWO-BO	Designer drain waste & overflow kit Available finishes: White **(WH)**, Bone **(BO)**, Polished Chrome **(PC)**, Polished Brass**(PB)**, Brushed Nickel**(BN)**,	$ 288
DDWO-WH		$ 288
DDWO-BN		$ 288
35RKBO	Finish repair kit - Case of 12 Available in White **(WH)**, or Bone **(BO)**,	$ 303
35RKWH		$ 303

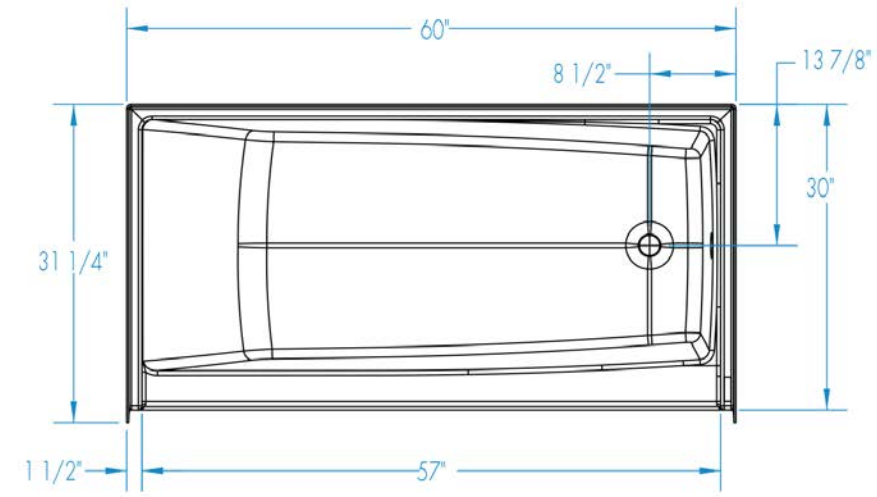
60"
8 1/2"
13 7/8"
30"
31 1/4"
1 1/2"
57"

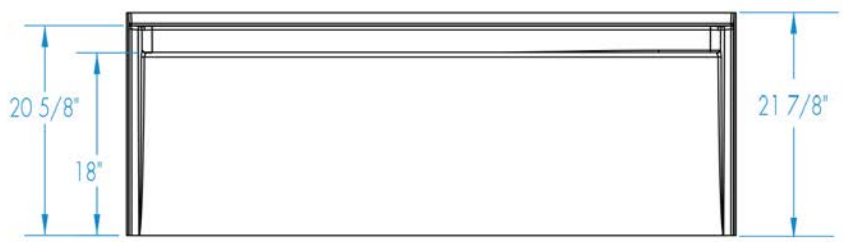
20 5/8"
18"
21 7/8"

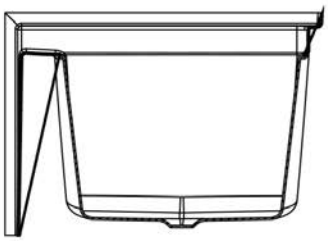

6032DMIN

Material : AcrylX™

Min: 38 Gal
Max: 60 Gal

Features

- Island bath
- Deep bathing well
- Ergonomic backrest for bathing comfort
- Can be used in an undermount or drop-in application
- Slip-resistant textured floor for safety
- Universal drain
- AcrylX™ applied acrylic surface
- Whirlpool Features:
- Whirlpool pump
- 6 directional hydrotherapy jets
- Pneumatic on/off control
- Color matched trim
- Advanced safety suction system

6032DMIN - PRICING CATEGORY : EK

SKU	System	Color	Configuration	Dimensions & Weight	MSRP
6032DMIN-AL	Soaker - No System	Almond	Universal	60” x 32” x 19” / 41 lb 1524mm x 813mm x 483mm / 18.59 kg	$ 841
6032DMIN-BI		Biscuit			$ 841
6032DMIN-BK		Black			$ 1161
6032DMIN-BO		Bone			$ 841
6032DMIN-LN		Linen			$ 841
6032DMIN-ME		Mexican Sand			$ 1161
6032DMIN-SD		Sandbar			$ 1161
6032DMIN-ST		Sterling Silver			$ 1161
6032DMIN-WH		White			$ 806
6032DMINWP-BI	Whirlpool Massage	Biscuit		60” x 32” x 19” / 81 lb 1524mm x 813mm x 483mm / 18.59 kg	$ 2297
6032DMINWP-LN		Linen			$ 2297
6032DMINWP-WH		White			$ 2262

OPTIONS

SKU	Description	MSRP
DDWO-PC	Designer drain waste & overflow kit Available finishes: White **(WH)**, Bone **(BO)**, Polished Chrome **(PC)**, Polished Brass**(PB)**, Brushed Nickel**(BN)**,	$ 288

OPTIONS

SKU	Description	MSRP
DDWO-PB	Designer drain waste & overflow kit Available finishes: White **(WH)**, Bone **(BO)**, Polished Chrome **(PC)**, Polished Brass**(PB)**, Brushed Nickel**(BN)**,	$ 288
DDWO-BO	Designer drain waste & overflow kit Available finishes: White **(WH)**, Bone **(BO)**, Polished Chrome **(PC)**, Polished Brass**(PB)**, Brushed Nickel**(BN)**,	$ 288
DDWO-WH		$ 288
DDWO-BN		$ 288
35RKBO	Finish repair kit - Case of 12 Available in White **(WH)**, or Bone **(BO)**,	$ 303
35RKWH		$ 303
CPOPBK1	Removable soft bath pillow Available colors: Black **(BK)**, White **(WH)**,	$ 115
CPOPWH1		$ 115

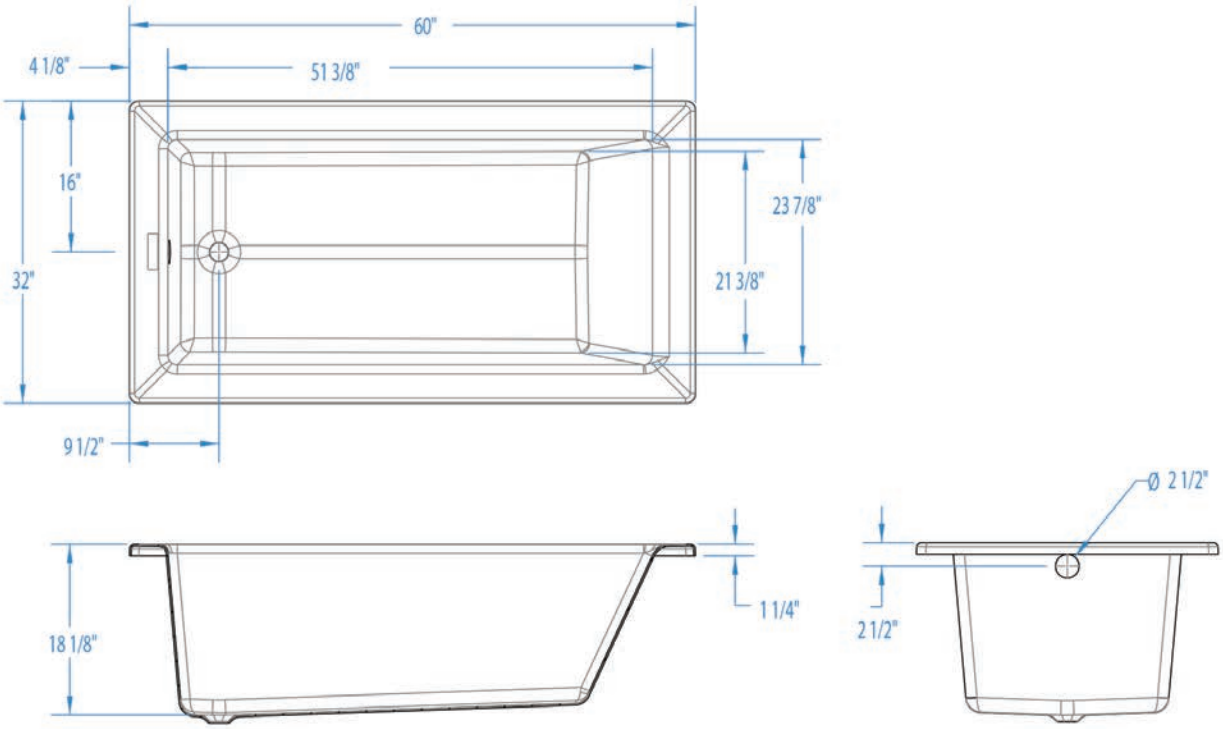
60"
4 1/8"
51 3/8"
16"
32"
23 7/8"
21 3/8"
9 1/2"
Ø 2 1/2"
1 1/4"
18 1/8"
2 1/2"

6032SMIN





Material : AcrylX™

Min: 35 Gal
Max: 52 Gal

Features

- Alcove bath
- Integral 18 in. skirt
- Deep bathing well
- Ergonomic backrest for bathing comfort
- Slip-resistant textured floor for safety
- Left or right hand drain
- AcrylX™ applied acrylic surface
- Whirlpool Features:
- Whirlpool pump
- 6 directional hydrotherapy jets
- Pneumatic on/off control
- Color matched trim
- Advanced safety suction system

6032SMIN - PRICING CATEGORY : EK

SKU	System	Color	Configuration	Dimensions & Weight	MSRP
6032SMINL-AL	Soaker - No System	Almond	Left-hand Drain	60” x 32” x 18” / 48 lb 1524mm x 838mm x 457mm / 21.77 kg	$ 841
6032SMINL-BI		Biscuit			$ 841
6032SMINL-BK		Black			$ 1161
6032SMINL-BO		Bone			$ 841
6032SMINL-LN		Linen			$ 841
6032SMINL-ME		Mexican Sand			$ 1161
6032SMINL-SD		Sandbar			$ 1161
6032SMINL-ST		Sterling Silver			$ 1161
6032SMINL-WH		White			$ 806
6032SMINLWP-BI	Whirlpool Massage	Biscuit		60” x 32” x 18” / 88 lb 1524mm x 838mm x 457mm / 21.77 kg	$ 2297
6032SMINLWP-LN		Linen			$ 2297
6032SMINLWP-WH		White			$ 2262
6032SMINR-AL	Soaker - No System	Almond	Right-hand Drain	60” x 32” x 18” / 48 lb 1524mm x 838mm x 457mm / 21.77 kg	$ 841
6032SMINR-BI		Biscuit			$ 841
6032SMINR-BK		Black			$ 1161
6032SMINR-BO		Bone			$ 841
6032SMINR-LN		Linen			$ 841
6032SMINR-ME		Mexican Sand			$ 1161

6032SMIN - PRICING CATEGORY : EK

SKU	System	Color	Configuration	Dimensions & Weight	MSRP
6032SMINR-SD	Soaker - No System	Sandbar	Right-hand Drain	60” x 32” x 18” / 48 lb 1524mm x 838mm x 457mm / 21.77 kg	$ 1161
6032SMINR-ST		Sterling Silver			$ 1161
6032SMINR-WH		White			$ 806
6032SMINRWP-BI	Whirlpool Massage	Biscuit		60” x 32” x 18” / 88 lb 1524mm x 838mm x 457mm / 21.77 kg	$ 2297
6032SMINRWP-LN		Linen			$ 2297
6032SMINRWP-WH		White			$ 2262

OPTIONS

SKU	Description	MSRP
DDWO-PC	Designer drain waste & overflow kit Available finishes: White **(WH)**, Bone **(BO)**, Polished Chrome **(PC)**, Polished Brass**(PB)**, Brushed Nickel**(BN)**,	$ 288
DDWO-PB	Designer drain waste & overflow kit Available finishes: White **(WH)**, Bone **(BO)**, Polished Chrome **(PC)**, Polished Brass**(PB)**, Brushed Nickel**(BN)**,	$ 288
DDWO-BO	Designer drain waste & overflow kit Available finishes: White **(WH)**, Bone **(BO)**, Polished Chrome **(PC)**, Polished Brass**(PB)**, Brushed Nickel**(BN)**,	$ 288
DDWO-WH		$ 288
DDWO-BN		$ 288
35RKBO	Finish repair kit - Case of 12 Available in White **(WH)**, or Bone **(BO)**,	$ 303
35RKWH		$ 303
CPOPBK1	Removable soft bath pillow Available colors: Black **(BK)**, White **(WH)**,	$ 115
CPOPWH1		$ 115

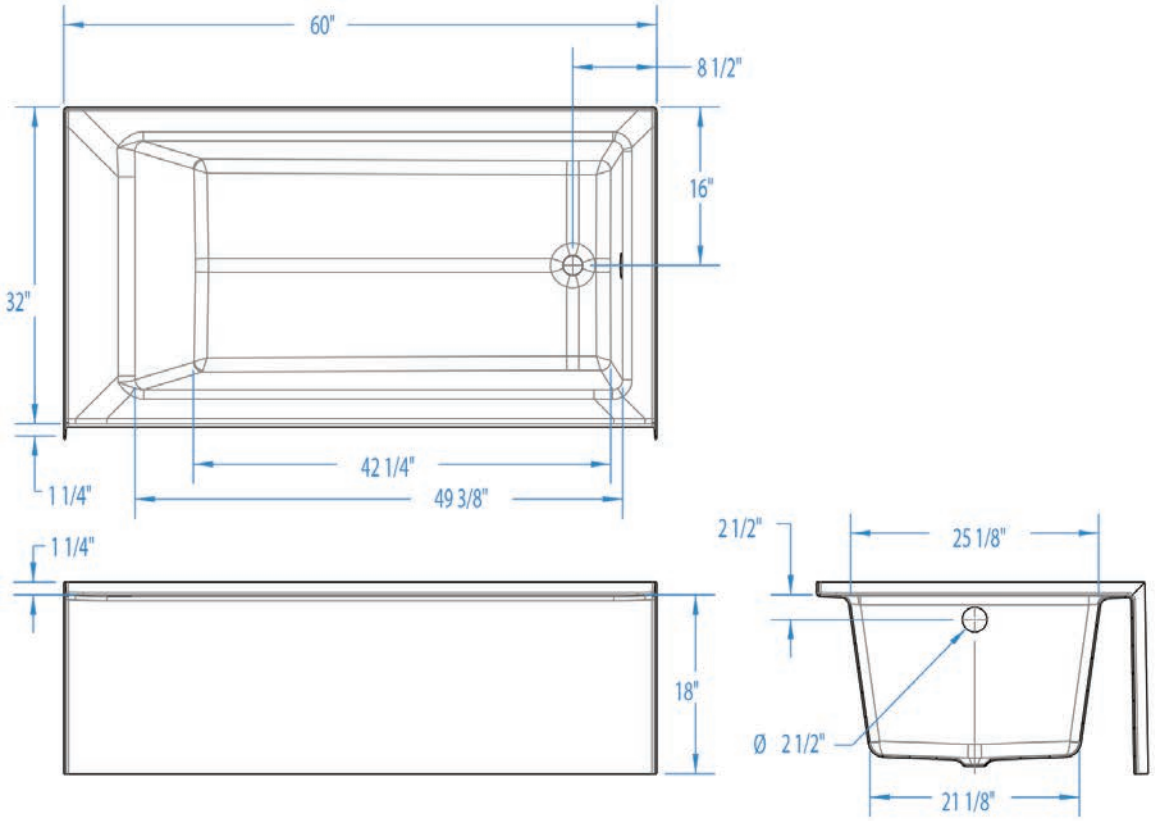
60"
8 1/2"
16"
32"
42 1/4"
49 3/8"
1 1/4"
1 1/4"
18"
2 1/2"
25 1/8"
Ø 2 1/2"
21 1/8"

6032SMINM AFR



Material : AcrylX™

Min: 35 Gal
Max: 52 Gal

Features

- Alcove bath
- Integral 21 in. skirt
- Deep bathing well
- Ergonomic backrest for bathing comfort
- This AFR unit accommodates the installation of drain, waste and overflow above the floor
- Slip-resistant textured floor for safety
- Left or right hand drain
- AcrylX™ applied acrylic surface
- Whirlpool Features:
- Whirlpool pump
- 6 directional hydrotherapy jets
- Pneumatic on/off control
- Color matched trim
- Advanced safety suction system

6032SMINM AFR - PRICING CATEGORY : EK

SKU	System	Color	Configuration	Dimensions & Weight	MSRP
6032SMINML-AL	Soaker - No System	Almond	Left-hand Drain	60” x 32” x 21” / 52 lb 1524mm x 813mm x 533mm / 23.58 kg	$ 878
6032SMINML-BI		Biscuit			$ 878
6032SMINML-BK		Black			$ 1198
6032SMINML-BO		Bone			$ 878
6032SMINML-LN		Linen			$ 878
6032SMINML-ME		Mexican Sand			$ 1198
6032SMINML-SD		Sandbar			$ 1198
6032SMINML-ST		Sterling Silver			$ 1198
6032SMINML-WH		White			$ 843
6032SMINMR-AL		Almond	Right-hand Drain		$ 878
6032SMINMR-BI		Biscuit			$ 878
6032SMINMR-BK		Black			$ 1198
6032SMINMR-BO		Bone			$ 878
6032SMINMR-LN		Linen			$ 878
6032SMINMR-ME		Mexican Sand			$ 1198
6032SMINMR-SD		Sandbar			$ 1198

6032SMINM AFR - PRICING CATEGORY : EK

SKU	System	Color	Configuration	Dimensions & Weight	MSRP
6032SMINMR-ST	Soaker - No System	Sterling Silver	Right-hand Drain	60” x 32” x 21” / 52 lb 1524mm x 813mm x 533mm / 23.58 kg	$ 1198
6032SMINMR-WH		White			$ 843

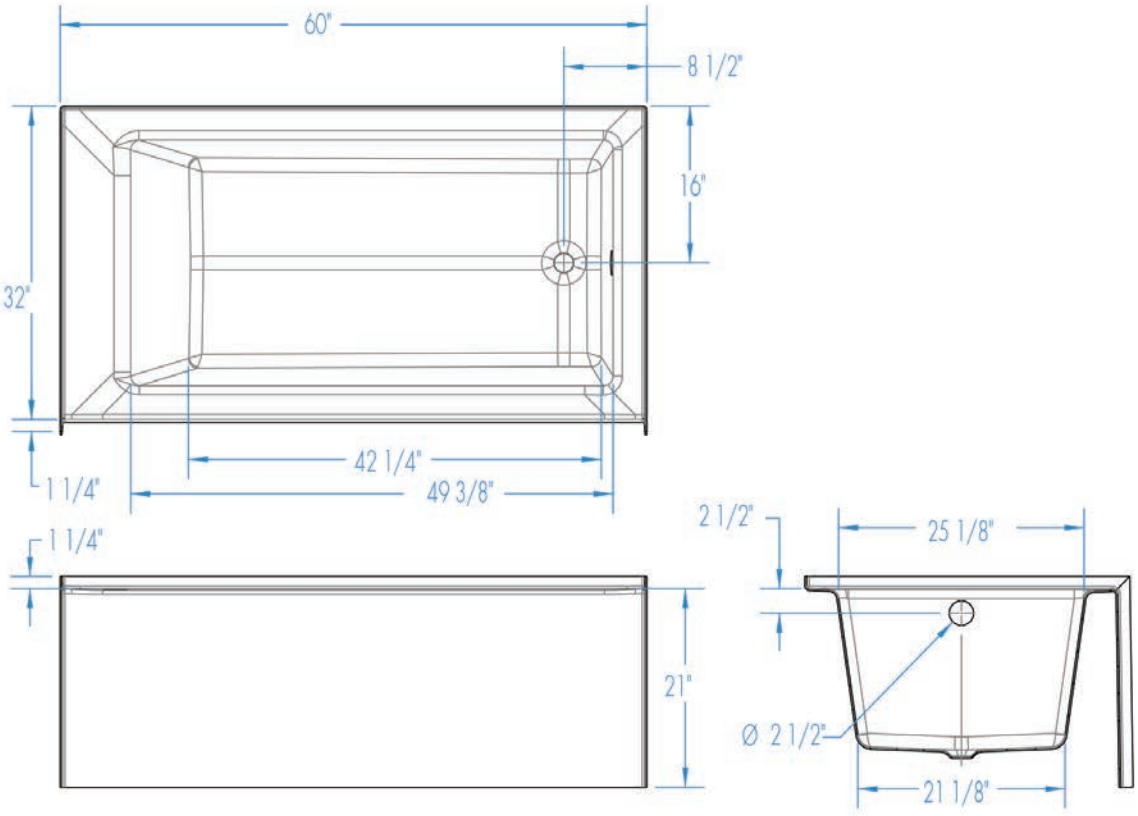
60"
8 1/2"
16"
32"
42 1/4"
1 1/4"
49 3/8"
1 1/4"
21"
2 1/2"
25 1/8"
Ø 2 1/2"
21 1/8"

6036DMIN



Material : AcrylX™

Min: 44 Gal
Max: 70 Gal

Features

- Island bath
- Deep bathing well
- Ergonomic backrest for bathing comfort
- Can be used in an undermount or drop-in application
- Slip-resistant textured floor for safety
- Universal drain
- AcrylX™ applied acrylic surface
- Whirlpool Features:
- Whirlpool pump
- 6 directional hydrotherapy jets
- Pneumatic on/off control
- Color matched trim
- Advanced safety suction system

6036DMIN - PRICING CATEGORY : EK

SKU	System	Color	Configuration	Dimensions & Weight	MSRP
6036DMIN-AL	Soaker - No System	Almond	Universal	60” x 36” x 19” / 49 lb 1524mm x 914mm x 483mm / 22.22 kg	$ 945
6036DMIN-BI		Biscuit			$ 945
6036DMIN-BK		Black			$ 1265
6036DMIN-BO		Bone			$ 945
6036DMIN-LN		Linen			$ 945
6036DMIN-ME		Mexican Sand			$ 1265
6036DMIN-SD		Sandbar			$ 1265
6036DMIN-ST		Sterling Silver			$ 1265
6036DMIN-WH		White			$ 910
6036DMINWP-BI	Whirlpool Massage	Biscuit		60” x 36” x 19” / 89 lb 1524mm x 914mm x 483mm / 22.22 kg	$ 2375
6036DMINWP-LN		Linen			$ 2375
6036DMINWP-WH		White			$ 2340

OPTIONS

SKU	Description	MSRP
DDWO-PC	Designer drain waste & overflow kit Available finishes: White **(WH)**, Bone **(BO)**, Polished Chrome **(PC)**, Polished Brass**(PB)**, Brushed Nickel**(BN)**,	$ 288

OPTIONS

SKU	Description	MSRP
DDWO-PB	Designer drain waste & overflow kit Available finishes: White **(WH)**, Bone **(BO)**, Polished Chrome **(PC)**, Polished Brass**(PB)**, Brushed Nickel**(BN)**,	$ 288
DDWO-BO	Designer drain waste & overflow kit Available finishes: White **(WH)**, Bone **(BO)**, Polished Chrome **(PC)**, Polished Brass**(PB)**, Brushed Nickel**(BN)**,	$ 288
DDWO-WH		$ 288
DDWO-BN		$ 288
35RKBO	Finish repair kit - Case of 12 Available in White **(WH)**, or Bone **(BO)**,	$ 303
35RKWH		$ 303
CPOPBK1	Removable soft bath pillow Available colors: Black **(BK)**, White **(WH)**,	$ 115
CPOPWH1		$ 115

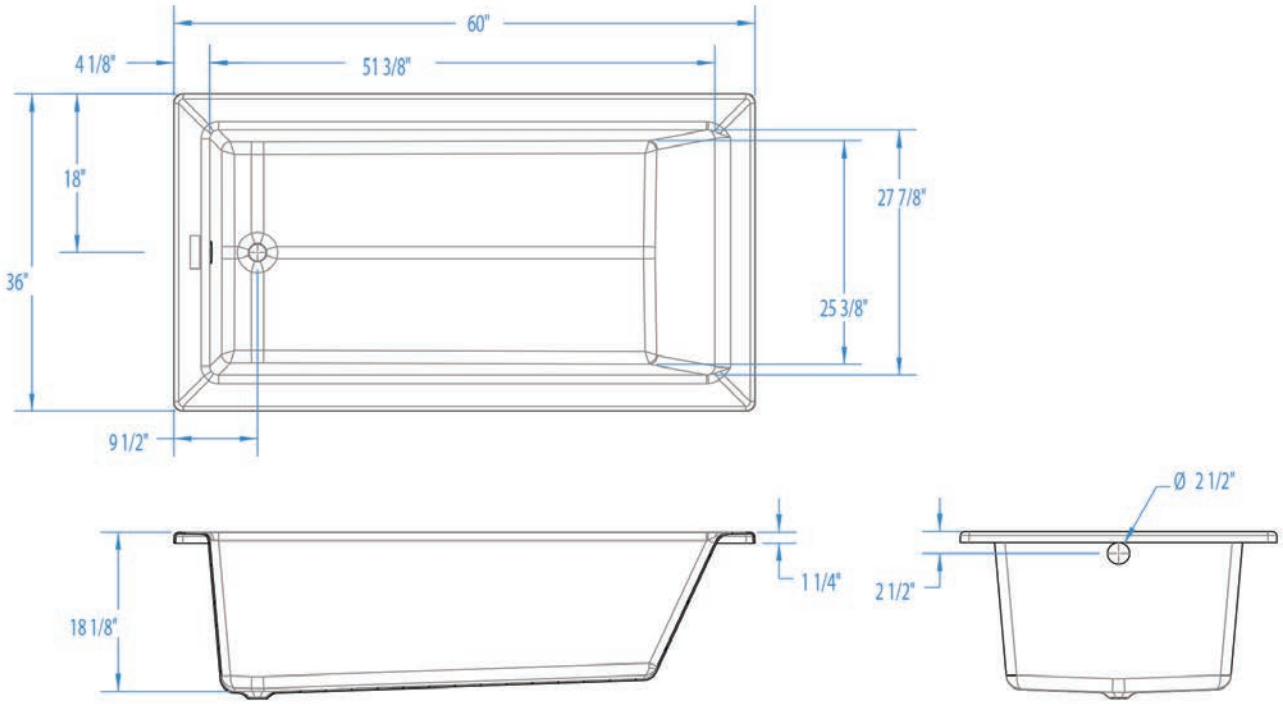
60"
4 1/8"
51 3/8"
18"
36"
27 7/8"
25 3/8"
9 1/2"
Ø 2 1/2"
1 1/4"
18 1/8"
2 1/2"

6036H

Material : AcrylX™

Min: 35 Gal
Max: 50 Gal

Features

- Alcove bath
- Integral arm rests
- Ergonomic backrest for bathing comfort
- Integral tiling flange (3T) acts as a moisture barrier
- Integral 17 in. skirt
- Slip-resistant textured floor for safety
- Left or right hand drain
- AcrylX™ applied acrylic surface
- Whirlpool Features:
- Whirlpool pump
- 6 directional hydrotherapy jets
- Pneumatic on/off control
- Color matched trim
- Advanced safety suction system

6036H - PRICING CATEGORY : EH

SKU	System	Color	Configuration	Dimensions & Weight	MSRP
6036HL-AL	Soaker - No System	Almond	Left-hand Drain	60” x 36” x 17” / 73 lb 1524mm x 914mm x 432mm / 33.11 kg	$ 1055
6036HL-BI		Biscuit			$ 1055
6036HL-BK		Black			$ 1375
6036HL-BO		Bone			$ 1055
6036HL-LN		Linen			$ 1055
6036HL-ME		Mexican Sand			$ 1375
6036HL-SD		Sandbar			$ 1375
6036HL-ST		Sterling Silver			$ 1375
6036HL-WH		White			$ 1020
6036HLWP-BI	Whirlpool Massage	Biscuit		60” x 36” x 17” / 123 lb 1524mm x 914mm x 432mm / 33.11 kg	$ 3342
6036HLWP-LN		Linen			$ 3342
6036HLWP-WH		White			$ 3307
6036HR-AL	Soaker - No System	Almond	Right-hand Drain	60” x 36” x 17” / 73 lb 1524mm x 914mm x 432mm / 33.11 kg	$ 1055
6036HR-BI		Biscuit			$ 1055
6036HR-BK		Black			$ 1375
6036HR-BO		Bone			$ 1055
6036HR-LN		Linen			$ 1055

6036H - PRICING CATEGORY : EH

SKU	System	Color	Configuration	Dimensions & Weight	MSRP
6036HR-ME	Soaker - No System	Mexican Sand	Right-hand Drain	60” x 36” x 17” / 73 lb 1524mm x 914mm x 432mm / 33.11 kg	$ 1375
6036HR-SD		Sandbar			$ 1375
6036HR-ST		Sterling Silver			$ 1375
6036HR-WH		White			$ 1020
6036HRWP-BI	Whirlpool Massage	Biscuit		60” x 36” x 17” / 123 lb 1524mm x 914mm x 432mm / 33.11 kg	$ 3342
6036HRWP-LN		Linen			$ 3342
6036HRWP-WH		White			$ 3307

OPTIONS

SKU	Description	MSRP
DDWO-PC	Designer drain waste & overflow kit Available finishes: White **(WH)**, Bone **(BO)**, Polished Chrome **(PC)**, Polished Brass**(PB)**, Brushed Nickel**(BN)**,	$ 288
DDWO-PB	Designer drain waste & overflow kit Available finishes: White **(WH)**, Bone **(BO)**, Polished Chrome **(PC)**, Polished Brass**(PB)**, Brushed Nickel**(BN)**,	$ 288
DDWO-BO	Designer drain waste & overflow kit Available finishes: White **(WH)**, Bone **(BO)**, Polished Chrome **(PC)**, Polished Brass**(PB)**, Brushed Nickel**(BN)**,	$ 288
DDWO-WH		$ 288
DDWO-BN		$ 288
35RKBO	Finish repair kit - Case of 12 Available in White **(WH)**, or Bone **(BO)**,	$ 303
35RKWH		$ 303
CPOPBK1	Removable soft bath pillow Available colors: Black **(BK)**, White **(WH)**,	$ 115
CPOPWH1		$ 115
5715RSP	Convenient access panel Whirlpool option only	$ 240
PLL2	Pump location is applicable to whirlpools and blower location for air system No charge option Refer to technical drawing for applicable choices	$ 0
PLL3		$ 0
PLL4		$ 0
PLL5		$ 0

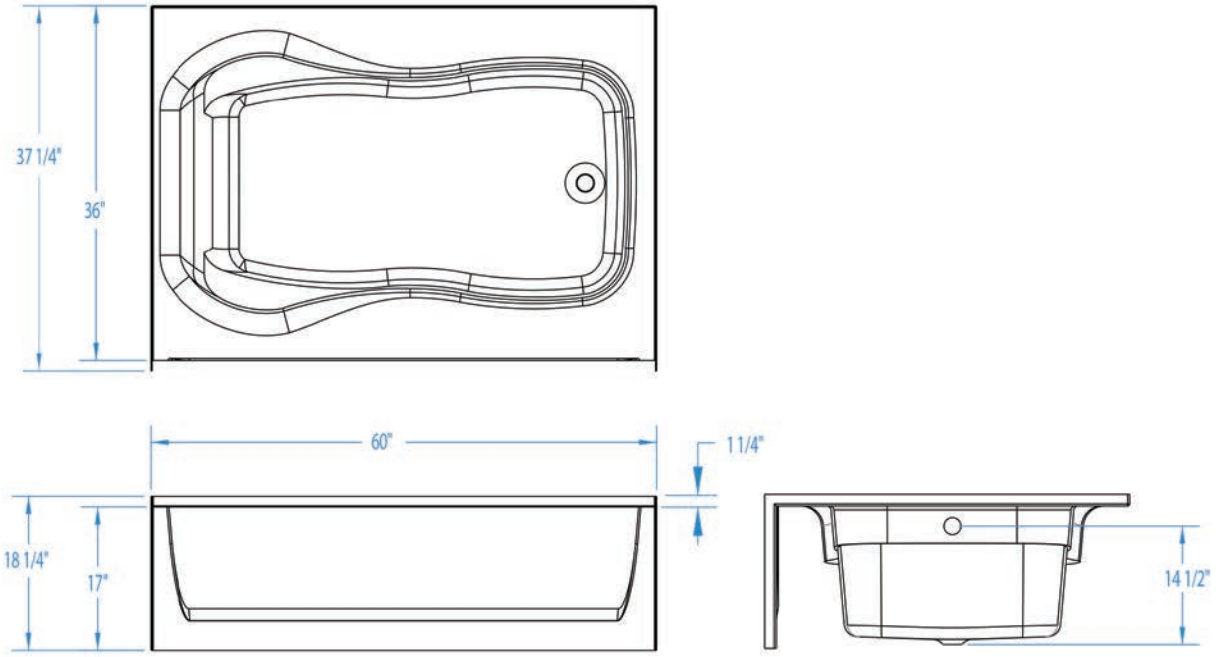
37 1/4"
36"
60"
1 1/4"
18 1/4"
17"
14 1/2"

6036HM AFR



Material : AcrylX™

Min: 35 Gal
Max: 50 Gal

Features

- Alcove bath
- Integral arm rests
- Ergonomic backrest for bathing comfort
- Integral tiling flange (3T) acts as a moisture barrier
- Integral 20 in. skirt
- Slip-resistant textured floor for safety
- Left or right hand drain
- This AFR unit accommodates the installation of drain, waste and overflow above the floor
- AcrylX™ applied acrylic surface
- Whirlpool Features:
- Whirlpool pump
- 6 directional hydrotherapy jets
- Pneumatic on/off control
- Color matched trim
- Advanced safety suction system

6036HM AFR - PRICING CATEGORY : EH

SKU	System	Color	Configuration	Dimensions & Weight	MSRP
6036HML-AL	Soaker - No System	Almond	Left-hand Drain	60” x 36” x 20” / 73 lb 1524mm x 914mm x 508mm / 33.11 kg	$ 1098
6036HML-BI		Biscuit			$ 1098
6036HML-BK		Black			$ 1418
6036HML-BO		Bone			$ 1098
6036HML-LN		Linen			$ 1098
6036HML-ME		Mexican Sand			$ 1418
6036HML-SD		Sandbar			$ 1418
6036HML-ST		Sterling Silver			$ 1418
6036HML-WH		White			$ 1063
6036HMR-AL		Almond	Right-hand Drain		$ 1098
6036HMR-BI		Biscuit			$ 1098
6036HMR-BK		Black			$ 1418
6036HMR-BO		Bone			$ 1098
6036HMR-LN		Linen			$ 1098
6036HMR-ME		Mexican Sand			$ 1418

6036HM AFR - PRICING CATEGORY : EH

SKU	System	Color	Configuration	Dimensions & Weight	MSRP
6036HMR-SD	Soaker - No System	Sandbar	Right-hand Drain	60” x 36” x 20” / 73 lb 1524mm x 914mm x 508mm / 33.11 kg	$ 1418
6036HMR-ST		Sterling Silver			$ 1418
6036HMR-WH		White			$ 1063

OPTIONS

SKU	Description	MSRP
DDWO-PC	Designer drain waste & overflow kit Available finishes: White **(WH)**, Bone **(BO)**, Polished Chrome **(PC)**, Polished Brass**(PB)**, Brushed Nickel**(BN)**,	$ 288
DDWO-PB	Designer drain waste & overflow kit Available finishes: White **(WH)**, Bone **(BO)**, Polished Chrome **(PC)**, Polished Brass**(PB)**, Brushed Nickel**(BN)**,	$ 288
DDWO-BO	Designer drain waste & overflow kit Available finishes: White **(WH)**, Bone **(BO)**, Polished Chrome **(PC)**, Polished Brass**(PB)**, Brushed Nickel**(BN)**,	$ 288
DDWO-WH		$ 288
DDWO-BN		$ 288
35RKBO	Finish repair kit - Case of 12 Available in White **(WH)**, or Bone **(BO)**,	$ 303
35RKWH		$ 303
CPOPBK1	Removable soft bath pillow Available colors: Black **(BK)**, White **(WH)**,	$ 115
CPOPWH1		$ 115
5715RSP	Convenient access panel Whirlpool option only	$ 240
PLL2	Pump location is applicable to whirlpools and blower location for air system No charge option Refer to technical drawing for applicable choices	$ 0
PLL3		$ 0
PLL4		$ 0
PLL5		$ 0

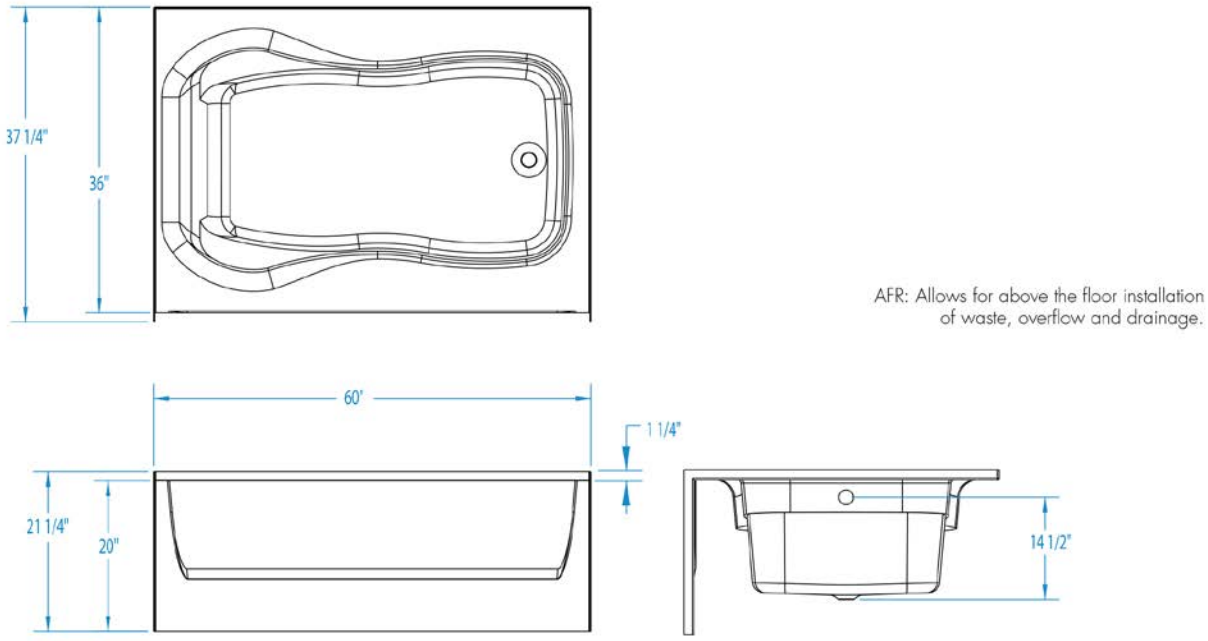

AFR: Allows for above the floor installation of waste, overflow and drainage.

6036SMIN





Material : AcrylX™

Min: 35 Gal
Max: 52 Gal

Features

- Alcove bath
- Integral 18 in. skirt
- Deep bathing well
- Ergonomic backrest for bathing comfort
- Slip-resistant textured floor for safety
- Left or right hand drain
- AcrylX™ applied acrylic surface
- Whirlpool Features:
- Whirlpool pump
- 6 directional hydrotherapy jets
- Pneumatic on/off control
- Color matched trim
- Advanced safety suction system

6036SMIN - PRICING CATEGORY : EK

SKU	System	Color	Configuration	Dimensions & Weight	MSRP
6036SMINL-AL	Soaker - No System	Almond	Left-hand Drain	60” x 36” x 18” / 57 lb 1524mm x 914mm x 457mm / 25.85 kg	$ 945
6036SMINL-BI		Biscuit			$ 945
6036SMINL-BK		Black			$ 1265
6036SMINL-BO		Bone			$ 945
6036SMINL-LN		Linen			$ 945
6036SMINL-ME		Mexican Sand			$ 1265
6036SMINL-SD		Sandbar			$ 1265
6036SMINL-ST		Sterling Silver			$ 1265
6036SMINL-WH		White			$ 910
6036SMINLWP-BI	Whirlpool Massage	Biscuit		60” x 36” x 18” / 99 lb 1524mm x 914mm x 457mm / 25.85 kg	$ 2375
6036SMINLWP-LN		Linen			$ 2375
6036SMINLWP-WH		White			$ 2340
6036SMINR-AL	Soaker - No System	Almond	Right-hand Drain	60” x 36” x 18” / 57 lb 1524mm x 914mm x 457mm / 25.85 kg	$ 945
6036SMINR-BI		Biscuit			$ 945
6036SMINR-BK		Black			$ 1265
6036SMINR-BO		Bone			$ 945
6036SMINR-LN		Linen			$ 945
6036SMINR-ME		Mexican Sand			$ 1265

6036SMIN - PRICING CATEGORY : EK

SKU	System	Color	Configuration	Dimensions & Weight	MSRP
6036SMINR-SD	Soaker - No System	Sandbar	Right-hand Drain	60” x 36” x 18” / 57 lb 1524mm x 914mm x 457mm / 25.85 kg	$ 1265
6036SMINR-ST		Sterling Silver			$ 1265
6036SMINR-WH		White			$ 910
6036SMINRWP-BI	Whirlpool Massage	Biscuit		60” x 36” x 18” / 99 lb 1524mm x 914mm x 457mm / 25.85 kg	$ 2375
6036SMINRWP-LN		Linen			$ 2375
6036SMINRWP-WH		White			$ 2340

OPTIONS

SKU	Description	MSRP
DDWO-PC	Designer drain waste & overflow kit Available finishes: White **(WH)**, Bone **(BO)**, Polished Chrome **(PC)**, Polished Brass**(PB)**, Brushed Nickel**(BN)**,	$ 288
DDWO-PB	Designer drain waste & overflow kit Available finishes: White **(WH)**, Bone **(BO)**, Polished Chrome **(PC)**, Polished Brass**(PB)**, Brushed Nickel**(BN)**,	$ 288
DDWO-BO	Designer drain waste & overflow kit Available finishes: White **(WH)**, Bone **(BO)**, Polished Chrome **(PC)**, Polished Brass**(PB)**, Brushed Nickel**(BN)**,	$ 288
DDWO-WH		$ 288
DDWO-BN		$ 288
35RKBO	Finish repair kit - Case of 12 Available in White **(WH)**, or Bone **(BO)**,	$ 303
35RKWH		$ 303
CPOPBK1	Removable soft bath pillow Available colors: Black **(BK)**, White **(WH)**,	$ 115
CPOPWH1		$ 115

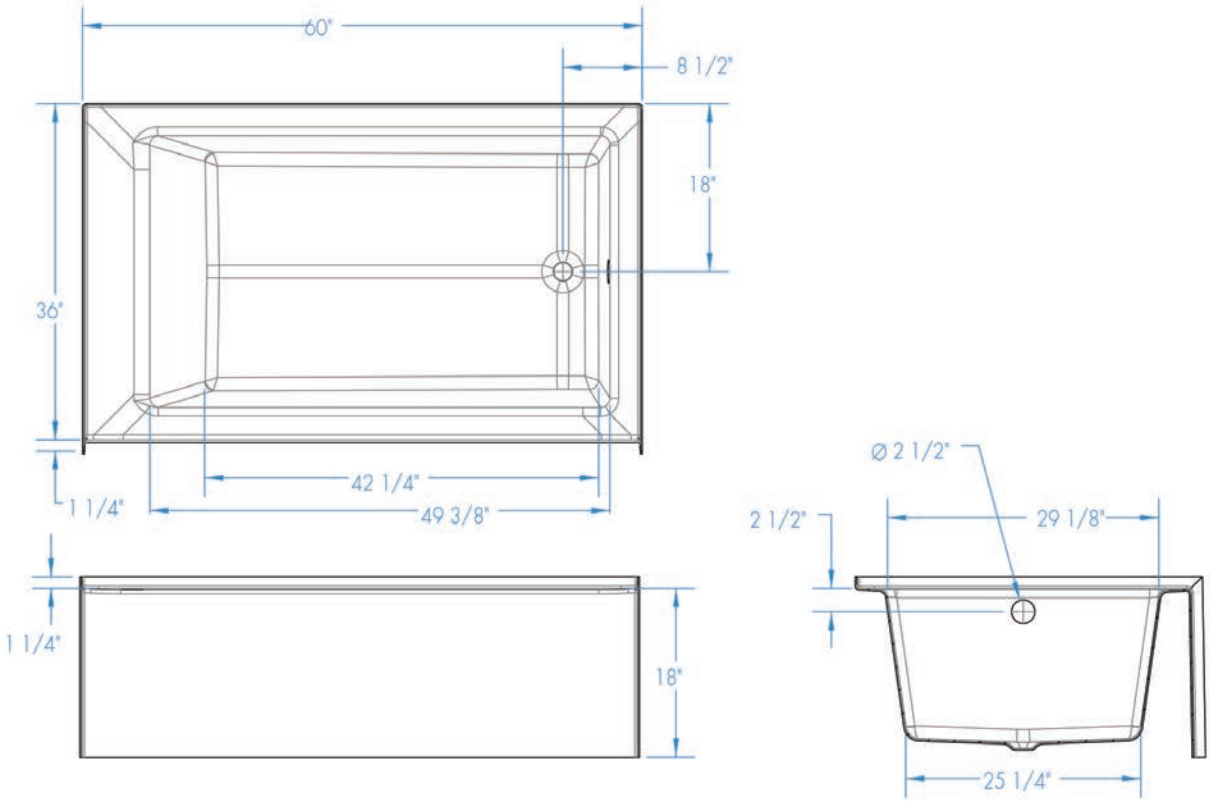
60"
8 1/2"
18"
36"
42 1/4"
1 1/4"
49 3/8"
1 1/4"
18"
Ø 2 1/2"
2 1/2"
29 1/8"
25 1/4"

6036SMINM AFR





Material : AcrylX™

Min: 35 Gal
Max: 52 Gal

Features

- Alcove bath
- Integral 21 in. skirt
- Deep bathing well
- Ergonomic backrest for bathing comfort
- This AFR unit accommodates the installation of drain, waste and overflow above the floor
- Slip-resistant textured floor for safety
- Left or right hand drain
- AcrylX™ applied acrylic surface
- Whirlpool Features:
- Whirlpool pump
- 6 directional hydrotherapy jets
- Pneumatic on/off control
- Color matched trim
- Advanced safety suction system

6036SMINM AFR - PRICING CATEGORY : EK

SKU	System	Color	Configuration	Dimensions & Weight	MSRP
6036SMINML-AL	Soaker - No System	Almond	Left-hand Drain	60” x 36” x 21” / 59 lb 1524mm x 914mm x 533mm / 26.76 kg	$ 983
6036SMINML-BI		Biscuit			$ 983
6036SMINML-BK		Black			$ 1303
6036SMINML-BO		Bone			$ 983
6036SMINML-LN		Linen			$ 983
6036SMINML-ME		Mexican Sand			$ 1303
6036SMINML-SD		Sandbar			$ 1303
6036SMINML-ST		Sterling Silver			$ 1303
6036SMINML-WH		White			$ 948
6036SMINMR-AL		Almond	Right-hand Drain		$ 983
6036SMINMR-BI		Biscuit			$ 983
6036SMINMR-BK		Black			$ 1303
6036SMINMR-BO		Bone			$ 983
6036SMINMR-LN		Linen			$ 983
6036SMINMR-ME		Mexican Sand			$ 1303
6036SMINMR-SD		Sandbar			$ 1303

6036SMINM AFR - PRICING CATEGORY : EK

SKU	System	Color	Configuration	Dimensions & Weight	MSRP
6036SMINMR-ST	Soaker - No System	Sterling Silver	Right-hand Drain	60” x 36” x 21” / 59 lb 1524mm x 914mm x 533mm / 26.76 kg	$ 1303
6036SMINMR-WH		White			$ 948

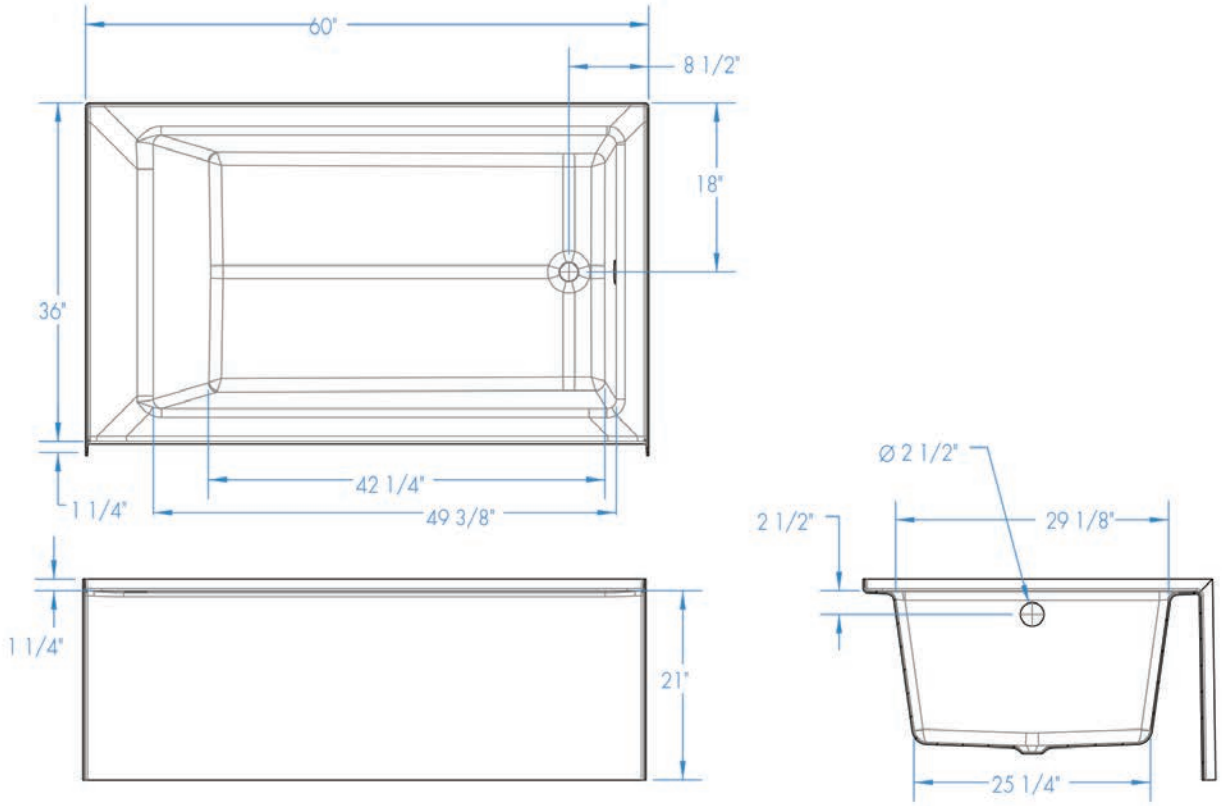
60"
8 1/2"
18"
36"
42 1/4"
1 1/4"
49 3/8"
1 1/4"
21"
Ø 2 1/2"
2 1/2"
29 1/8"
25 1/4"

6042BWC



Material : AcrylX™

Min: 48 Gal
Max: 54 Gal

Features

- Alcove bath
- Integral tiling flange (3T) acts as a moisture barrier
- 6-1/2 Inch wainscot
- Integral 18 in. bowed skirt
- Extra large bathing well
- Ergonomic backrest for bathing comfort
- Slip-resistant textured floor for safety
- Center rear drain
- AcrylX™ applied acrylic surface
- Whirlpool Features:
- Whirlpool pump
- 6 directional hydrotherapy jets
- Pneumatic on/off control
- Color matched trim
- Advanced safety suction system

6042BWC - PRICING CATEGORY : EH

SKU	System	Color	Configuration	Dimensions & Weight	MSRP
6042BWC-AL	Soaker - No System	Almond	Back Center Drain	60” x 34” x 24 1/2” / 71 lb 1524mm x 864mm x 622mm / 32.2 kg	$ 1293
6042BWC-BI		Biscuit			$ 1293
6042BWC-BK		Black			$ 1613
6042BWC-BO		Bone			$ 1293
6042BWC-LN		Linen			$ 1293
6042BWC-ME		Mexican Sand			$ 1613
6042BWC-SD		Sandbar			$ 1613
6042BWC-ST		Sterling Silver			$ 1613
6042BWC-WH		White			$ 1258
6042BWCWP-BI	Whirlpool Massage	Biscuit		60” x 34” x 24 1/2” / 120 lb 1524mm x 864mm x 622mm / 32.2 kg	$ 3698
6042BWCWP-LN		Linen			$ 3698
6042BWCWP-WH		White			$ 3663

OPTIONS

SKU	Description	MSRP
DDWO-PC	Designer drain waste & overflow kit Available finishes: White **(WH)**, Bone **(BO)**, Polished Chrome **(PC)**, Polished Brass**(PB)**, Brushed Nickel**(BN)**,	$ 288
DDWO-PB	Designer drain waste & overflow kit Available finishes: White **(WH)**, Bone **(BO)**, Polished Chrome **(PC)**, Polished Brass**(PB)**, Brushed Nickel**(BN)**,	$ 288
DDWO-BO	Designer drain waste & overflow kit Available finishes: White **(WH)**, Bone **(BO)**, Polished Chrome **(PC)**, Polished Brass**(PB)**, Brushed Nickel**(BN)**,	$ 288
DDWO-WH		$ 288
DDWO-BN		$ 288
35RKBO	Finish repair kit - Case of 12 Available in White **(WH)**, or Bone **(BO)**,	$ 303
35RKWH		$ 303
CPOPBK1	Removable soft bath pillow Available colors: Black **(BK)**, White **(WH)**,	$ 115
CPOPWH1		$ 115
PLL2	Pump location is applicable to whirlpools and blower location for air system No charge option Refer to technical drawing for applicable choices	$ 0

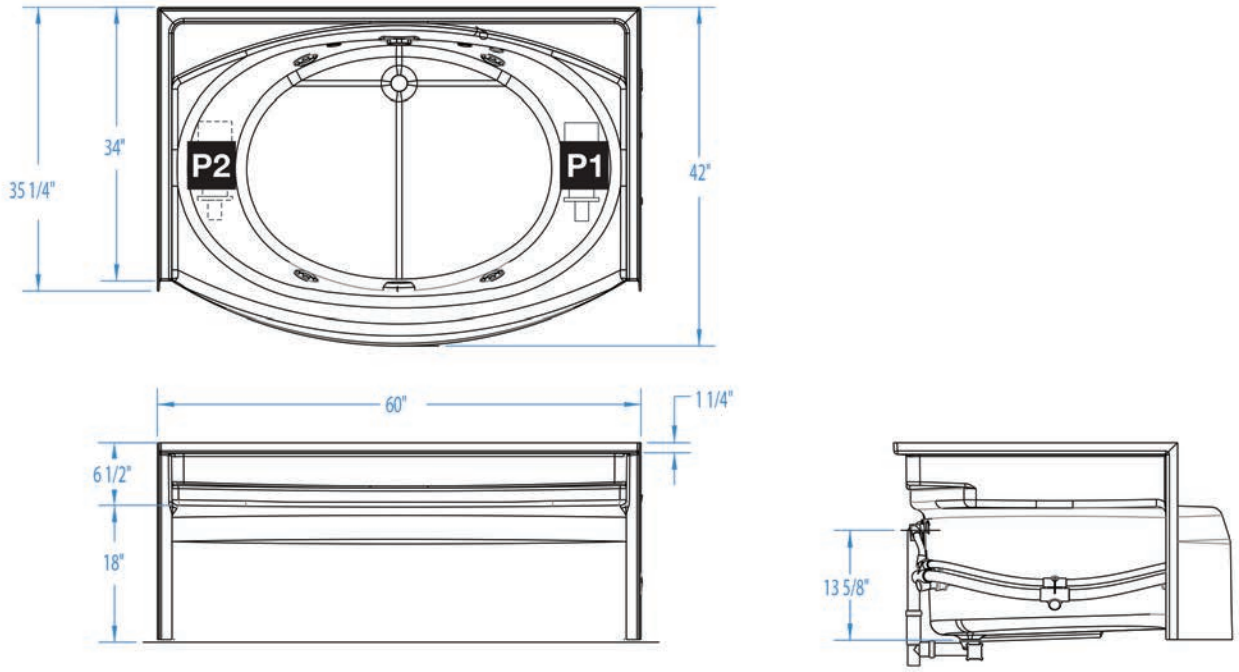
35 1/4"
34"
P2
P1
42"
60"
1 1/4"
6 1/2"
18"
13 5/8"

6042BWCM AFR





Material : AcrylX™

Min: 48 Gal
Max: 54 Gal

Features

- Alcove bath
- Integral tiling flange (3T) acts as a moisture barrier
- 6-1/2 Inch wainscot
- Integral 20 in. bowed skirt
- Integral toiletry shelves
- Extra large bathing well
- Ergonomic backrest for bathing comfort
- This AFR unit accommodates the installation of drain, waste and overflow above the floor
- Slip-resistant textured floor for safety
- Center rear drain
- AcrylX™ Applied Acrylic surface
- Whirlpool Features:
- Whirlpool pump
- 6 directional hydrotherapy jets
- Pneumatic on/off control
- Color matched trim
- Advanced safety suction system

6042BWCM AFR - PRICING CATEGORY : EH

SKU	System	Color	Configuration	Dimensions & Weight	MSRP
6042BWCM-AL	Soaker - No System	Almond	Back Center Drain	60” x 34” x 26 1/2” / 87 lb 1524mm x 864mm x 673mm / 39.46 kg	$ 1379
6042BWCM-BI		Biscuit			$ 1379
6042BWCM-BK		Black			$ 1699
6042BWCM-BO		Bone			$ 1379
6042BWCM-LN		Linen			$ 1379
6042BWCM-ME		Mexican Sand			$ 1699
6042BWCM-SD		Sandbar			$ 1699
6042BWCM-ST		Sterling Silver			$ 1699
6042BWCM-WH		White			$ 1344
6042BWCMWP-BI	Whirlpool Massage	Biscuit		60” x 34” x 26 1/2” / 130 lb 1524mm x 864mm x 673mm / 39.46 kg	$ 3779
6042BWCMWP-LN		Linen			$ 3779
6042BWCMWP-WH		White			$ 3744

OPTIONS

SKU	Description	MSRP
DDWO-PC	Designer drain waste & overflow kit Available finishes: White **(WH)**, Bone **(BO)**, Polished Chrome **(PC)**, Polished Brass**(PB)**, Brushed Nickel**(BN)**,	$ 288
DDWO-PB	Designer drain waste & overflow kit Available finishes: White **(WH)**, Bone **(BO)**, Polished Chrome **(PC)**, Polished Brass**(PB)**, Brushed Nickel**(BN)**,	$ 288
DDWO-BO	Designer drain waste & overflow kit Available finishes: White **(WH)**, Bone **(BO)**, Polished Chrome **(PC)**, Polished Brass**(PB)**, Brushed Nickel**(BN)**,	$ 288
DDWO-WH		$ 288
DDWO-BN		$ 288
35RKBO	Finish repair kit - Case of 12 Available in White **(WH)**, or Bone **(BO)**,	$ 303
35RKWH		$ 303
CPOPBK1	Removable soft bath pillow Available colors: Black **(BK)**, White **(WH)**,	$ 115
CPOPWH1		$ 115
PLL2	Pump location is applicable to whirlpools and blower location for air system No charge option Refer to technical drawing for applicable choices	$ 0

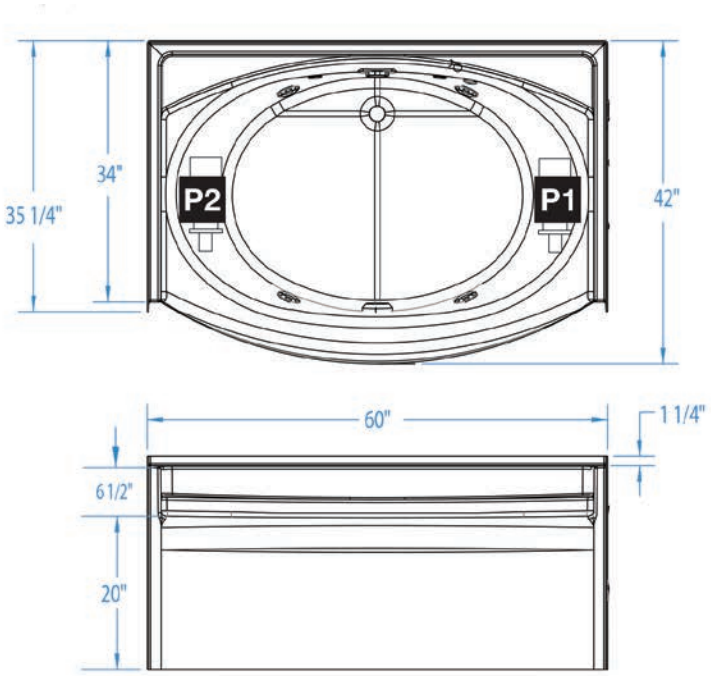

AFR: Allows for above the floor installation of waste, overflow and drainage.

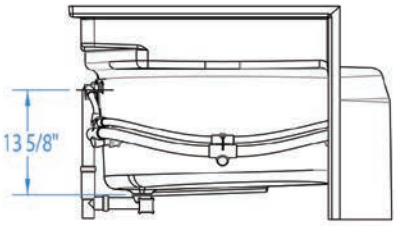

6042DMIN

Material : AcrylX™

Min: 41 Gal
Max: 83 Gal

Features

- Island bath
- Deep bathing well
- Ergonomic backrest for bathing comfort
- Can be used in an undermount or drop-in application
- Slip-resistant textured floor for safety
- Universal drain
- AcrylX™ applied acrylic surface
- Whirlpool Features:
- Whirlpool pump
- 6 directional hydrotherapy jets
- Pneumatic on/off control
- Color matched trim
- Advanced safety suction system

6042DMIN - PRICING CATEGORY : EK

SKU	System	Color	Configuration	Dimensions & Weight	MSRP
6042DMIN-AL	Soaker - No System	Almond	Universal	60” x 42” x 19” / 56 lb 1524mm x 1067mm x 483mm / 25.4 kg	$ 1022
6042DMIN-BI		Biscuit			$ 1022
6042DMIN-BK		Black			$ 1342
6042DMIN-BO		Bone			$ 1022
6042DMIN-LN		Linen			$ 1022
6042DMIN-ME		Mexican Sand			$ 1342
6042DMIN-SD		Sandbar			$ 1342
6042DMIN-ST		Sterling Silver			$ 1342
6042DMIN-WH		White			$ 987
6042DMINWP-BI	Whirlpool Massage	Biscuit		60” x 42” x 19” / 96 lb 1524mm x 1067mm x 483mm / 25.4 kg	$ 2437
6042DMINWP-LN		Linen			$ 2437
6042DMINWP-WH		White			$ 2402

OPTIONS

SKU	Description	MSRP
DDWO-PC	Designer drain waste & overflow kit Available finishes: White **(WH)**, Bone **(BO)**, Polished Chrome **(PC)**, Polished Brass**(PB)**, Brushed Nickel**(BN)**,	$ 288

OPTIONS

SKU	Description	MSRP
DDWO-PB	Designer drain waste & overflow kit Available finishes: White **(WH)**, Bone **(BO)**, Polished Chrome **(PC)**, Polished Brass**(PB)**, Brushed Nickel**(BN)**,	$ 288
DDWO-BO	Designer drain waste & overflow kit Available finishes: White **(WH)**, Bone **(BO)**, Polished Chrome **(PC)**, Polished Brass**(PB)**, Brushed Nickel**(BN)**,	$ 288
DDWO-WH		$ 288
DDWO-BN		$ 288
35RKBO	Finish repair kit - Case of 12 Available in White **(WH)**, or Bone **(BO)**,	$ 303
35RKWH		$ 303
CPOPBK1	Removable soft bath pillow Available colors: Black **(BK)**, White **(WH)**,	$ 115
CPOPWH1		$ 115

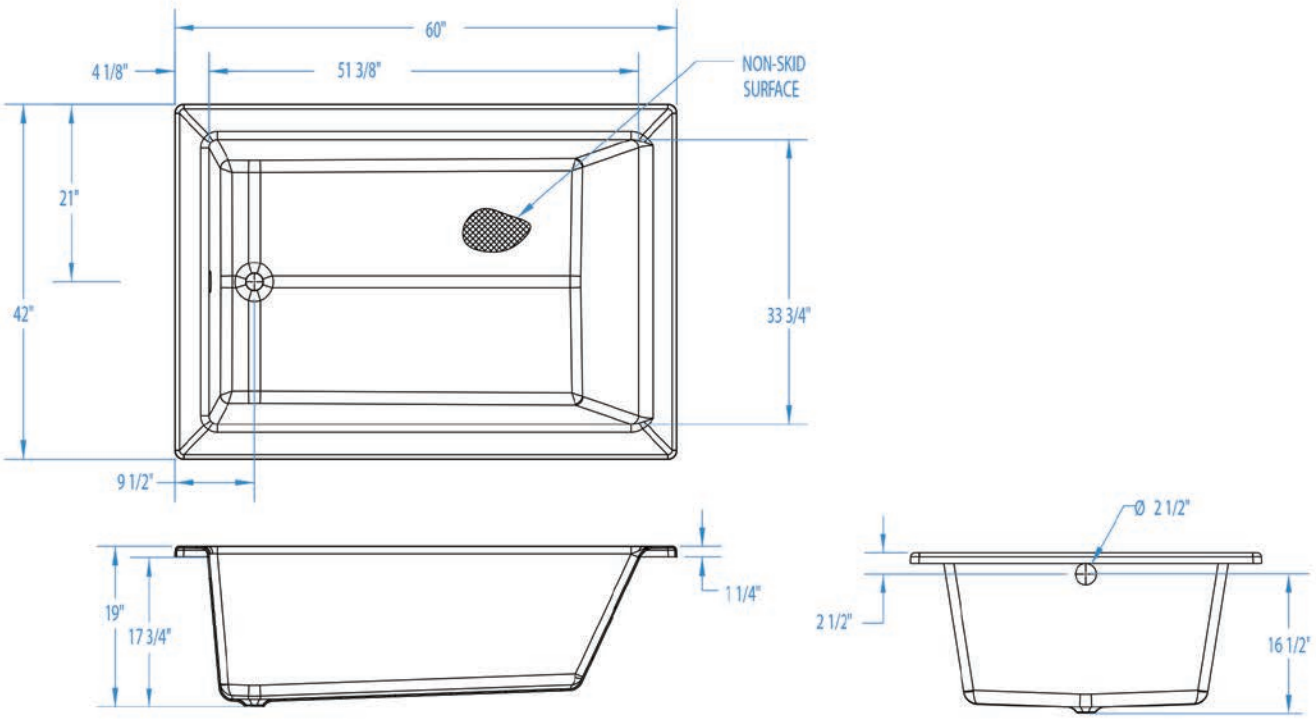
60"
4 1/8"
51 3/8"
NON-SKID
SURFACE
21"
42"
33 3/4"
9 1/2"
1 1/4"
19"
17 3/4"
Ø 2 1/2"
2 1/2"
16 1/2"

6042H





Material : AcrylX™

Min: 50 Gal
Max: 65 Gal

Features

- Alcove bath
- Integral arm rest
- Ergonomic back rest
- Integral tiling flange (3T) acts as a moisture barrier
- Integral 17 in. skirt
- Slip-resistant textured floor for safety
- Left or right hand drain
- AcrylX™ applied acrylic surface
- Whirlpool Features:
- Whirlpool pump
- 6 directional hydrotherapy jets
- Pneumatic on/off control
- 2 Air controls
- Color matched trim
- Advanced safety suction system

6042H - PRICING CATEGORY : EH

SKU	System	Color	Configuration	Dimensions & Weight	MSRP
6042HL-AL	Soaker - No System	Almond	Left-hand Drain	60” x 42” x 17” / 74 lb 1524mm x 1067mm x 432mm / 33.56 kg	$ 1082
6042HL-BI		Biscuit			$ 1082
6042HL-BK		Black			$ 1402
6042HL-BO		Bone			$ 1082
6042HL-LN		Linen			$ 1082
6042HL-ME		Mexican Sand			$ 1402
6042HL-SD		Sandbar			$ 1402
6042HL-ST		Sterling Silver			$ 1402
6042HL-WH		White			$ 1047
6042HLWP-BI	Whirlpool Massage	Biscuit		60” x 42” x 17” / 134 lb 1524mm x 1067mm x 432mm / 33.56 kg	$ 3405
6042HLWP-LN		Linen			$ 3405
6042HLWP-WH		White			$ 3370
6042HR-AL	Soaker - No System	Almond	Right-hand Drain	60” x 42” x 17” / 74 lb 1524mm x 1067mm x 432mm / 33.56 kg	$ 1082
6042HR-BI		Biscuit			$ 1082
6042HR-BK		Black			$ 1402
6042HR-BO		Bone			$ 1082

6042H - PRICING CATEGORY : EH

SKU	System	Color	Configuration	Dimensions & Weight	MSRP
6042HR-LN	Soaker - No System	Linen	Right-hand Drain	60” x 42” x 17” / 74 lb 1524mm x 1067mm x 432mm / 33.56 kg	$ 1082
6042HR-ME		Mexican Sand			$ 1402
6042HR-SD		Sandbar			$ 1402
6042HR-ST		Sterling Silver			$ 1402
6042HR-WH		White			$ 1047
6042HRWP-BI	Whirlpool Massage	Biscuit		60” x 42” x 17” / 134 lb 1524mm x 1067mm x 432mm / 33.56 kg	$ 3405
6042HRWP-LN		Linen			$ 3405
6042HRWP-WH		White			$ 3370

OPTIONS

SKU	Description	MSRP
DDWO-PC	Designer drain waste & overflow kit Available finishes: White **(WH)**, Bone **(BO)**, Polished Chrome **(PC)**, Polished Brass**(PB)**, Brushed Nickel**(BN)**,	$ 288
DDWO-PB	Designer drain waste & overflow kit Available finishes: White **(WH)**, Bone **(BO)**, Polished Chrome **(PC)**, Polished Brass**(PB)**, Brushed Nickel**(BN)**,	$ 288
DDWO-BO	Designer drain waste & overflow kit Available finishes: White **(WH)**, Bone **(BO)**, Polished Chrome **(PC)**, Polished Brass**(PB)**, Brushed Nickel**(BN)**,	$ 288
DDWO-WH		$ 288
DDWO-BN		$ 288
35RKBO	Finish repair kit - Case of 12 Available in White **(WH)**, or Bone **(BO)**,	$ 303
35RKWH		$ 303
CPOPBK1	Removable soft bath pillow Available colors: Black **(BK)**, White **(WH)**,	$ 115
CPOPWH1		$ 115
5715RSP	Convenient access panel Whirlpool option only	$ 240
PLL2	Pump location is applicable to whirlpools and blower location for air system No charge option Refer to technical drawing for applicable choices	$ 0
PLL3		$ 0
PLL4		$ 0
PLL5		$ 0

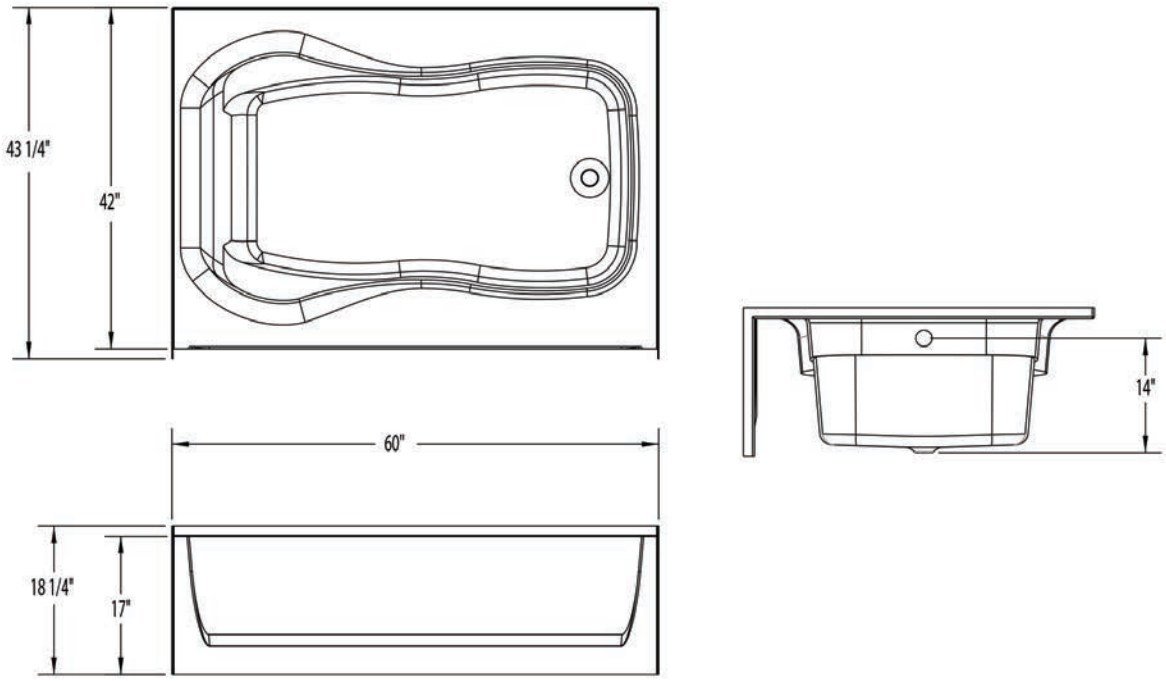
43 1/4"
42"
60"
18 1/4"
17"
14"

6042HCW



Material : AcrylX™

Min: 48 Gal
Max: 60 Gal

Features

- Alcove bath
- Integral arm rests
- Ergonomic backrest for bathing comfort
- Integral tiling flange (3T) acts as a moisture barrier
- Integral 19 in. skirt
- 8 Inch wainscoat
- Center rear drain
- Slip-resistant textured floor for safety
- AcrylX™ applied acrylic surface
- Whirlpool Features:
- Whirlpool pump
- 6 directional hydrotherapy jets
- Pneumatic on/off control
- Color matched trim
- Advanced safety suction system

6042HCW - PRICING CATEGORY : EH

SKU	System	Color	Configuration	Dimensions & Weight	MSRP
6042HCW-AL	Soaker - No System	Almond	Back Center Drain	60” x 42” x 27” / 93 lb 1524mm x 1067mm x 686mm / 42.18 kg	$ 1508
6042HCW-BI		Biscuit			$ 1508
6042HCW-BK		Black			$ 1828
6042HCW-BO		Bone			$ 1508
6042HCW-LN		Linen			$ 1508
6042HCW-ME		Mexican Sand			$ 1828
6042HCW-SD		Sandbar			$ 1828
6042HCW-ST		Sterling Silver			$ 1828
6042HCW-WH		White			$ 1473
6042HCWWP-BI	Whirlpool Massage	Biscuit		60” x 42” x 27” / 143 lb 1524mm x 1067mm x 686mm / 42.18 kg	$ 3342
6042HCWWP-LN		Linen			$ 3342
6042HCWWP-WH		White			$ 3307

OPTIONS

SKU	Description	MSRP
DDWO-PC	Designer drain waste & overflow kit Available finishes: White **(WH)**, Bone **(BO)**, Polished Chrome **(PC)**, Polished Brass**(PB)**, Brushed Nickel**(BN)**,	$ 288
DDWO-PB	Designer drain waste & overflow kit Available finishes: White **(WH)**, Bone **(BO)**, Polished Chrome **(PC)**, Polished Brass**(PB)**, Brushed Nickel**(BN)**,	$ 288
DDWO-BO	Designer drain waste & overflow kit Available finishes: White **(WH)**, Bone **(BO)**, Polished Chrome **(PC)**, Polished Brass**(PB)**, Brushed Nickel**(BN)**,	$ 288
DDWO-WH		$ 288
DDWO-BN		$ 288
35RKBO	Finish repair kit - Case of 12 Available in White **(WH)**, or Bone **(BO)**,	$ 303
35RKWH		$ 303
CPOPBK1	Removable soft bath pillow Available colors: Black **(BK)**, White **(WH)**,	$ 115
CPOPWH1		$ 115
4816RSP	Convenient access panel Whirlpool option only	$ 240
PLL2	Pump location is applicable to whirlpools and blower location for air system No charge option Refer to technical drawing for applicable choices	$ 0

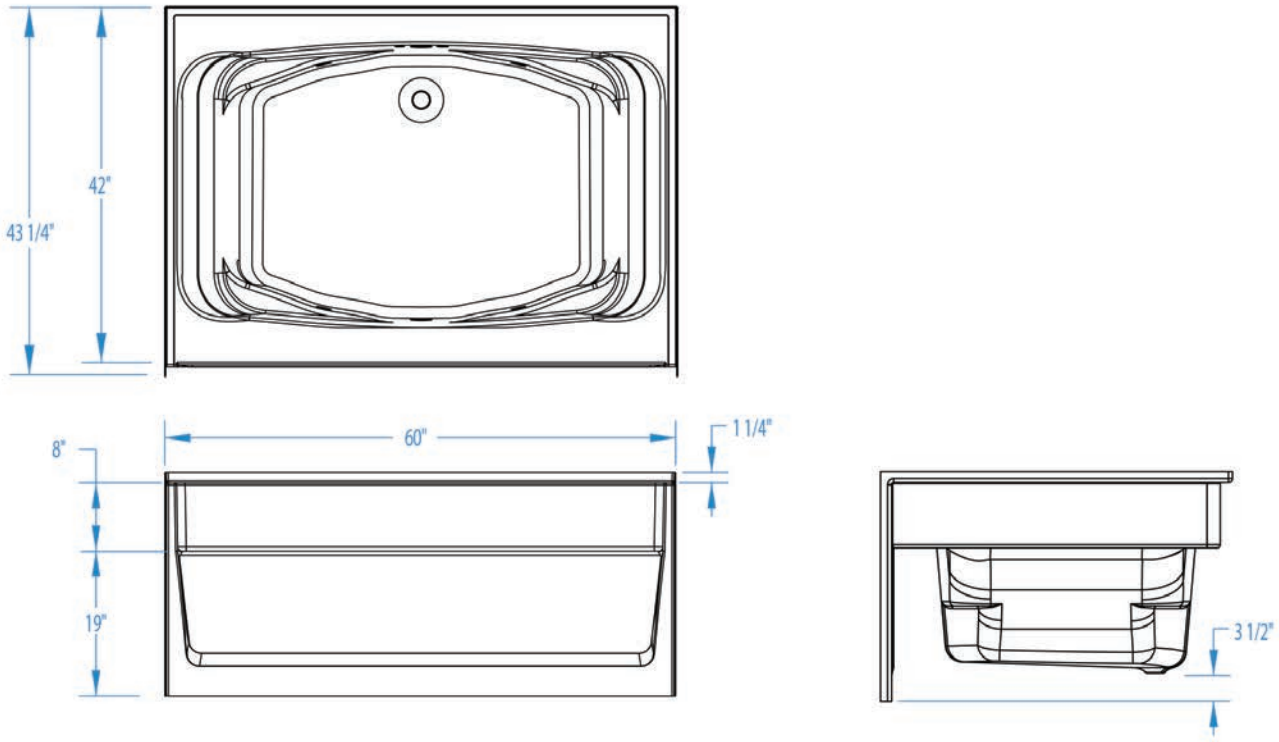
43 1/4"
42"
8"
60"
1 1/4"
19"
3 1/2"

6042HW



Material : AcrylX™

Min: 50 Gal
Max: 65 Gal

Features

- Alcove bath
- Integral arm rests
- Ergonomic backrest for bathing comfort
- Integral tiling flange (3T) acts as a moisture barrier
- Integral 17 in. skirt
- Slip-resistant textured floor for safety
- 8 Inch wainscot
- Left or right hand drain
- AcrylX™ applied acrylic surface
- Whirlpool Features:
- Whirlpool pump
- 6 directional hydrotherapy jets
- 2 air controls
- Pneumatic on/off control
- Color matched trim
- Advanced safety suction system

6042HW - PRICING CATEGORY : EH

SKU	System	Color	Configuration	Dimensions & Weight	MSRP
6042HWL-AL	Soaker - No System	Almond	Left-hand Drain	60” x 42” x 25” / 81 lb 1524mm x 1067mm x 635mm / 36.73 kg	$ 1112
6042HWL-BI		Biscuit			$ 1112
6042HWL-BK		Black			$ 1432
6042HWL-BO		Bone			$ 1112
6042HWL-LN		Linen			$ 1112
6042HWL-ME		Mexican Sand			$ 1432
6042HWL-SD		Sandbar			$ 1432
6042HWL-ST		Sterling Silver			$ 1432
6042HWL-WH		White			$ 1077
6042HWLWP-BI	Whirlpool Massage	Biscuit		60” x 42” x 25” / 131 lb 1524mm x 1067mm x 635mm / 36.73 kg	$ 3463
6042HWLWP-LN		Linen			$ 3463
6042HWLWP-WH		White			$ 3428
6042HWR-AL	Soaker - No System	Almond	Right-hand Drain	60” x 42” x 25” / 81 lb 1524mm x 1067mm x 635mm / 36.73 kg	$ 1112
6042HWR-BI		Biscuit			$ 1112
6042HWR-BK		Black			$ 1432

6042HW - PRICING CATEGORY : EH

SKU	System	Color	Configuration	Dimensions & Weight	MSRP
6042HWR-BO	Soaker - No System	Bone	Right-hand Drain	60” x 42” x 25” / 81 lb 1524mm x 1067mm x 635mm / 36.73 kg	$ 1112
6042HWR-LN		Linen			$ 1112
6042HWR-ME		Mexican Sand			$ 1432
6042HWR-SD		Sandbar			$ 1432
6042HWR-ST		Sterling Silver			$ 1432
6042HWR-WH		White			$ 1077
6042HWRWP-BI	Whirlpool Massage	Biscuit		60” x 42” x 25” / 131 lb 1524mm x 1067mm x 635mm / 36.73 kg	$ 3463
6042HWRWP-LN		Linen			$ 3463
6042HWRWP-WH		White			$ 3428

OPTIONS

SKU	Description	MSRP
DDWO-PC	Designer drain waste & overflow kit Available finishes: White **(WH)**, Bone **(BO)**, Polished Chrome **(PC)**, Polished Brass**(PB)**, Brushed Nickel**(BN)**,	$ 288
DDWO-PB	Designer drain waste & overflow kit Available finishes: White **(WH)**, Bone **(BO)**, Polished Chrome **(PC)**, Polished Brass**(PB)**, Brushed Nickel**(BN)**,	$ 288
DDWO-BO	Designer drain waste & overflow kit Available finishes: White **(WH)**, Bone **(BO)**, Polished Chrome **(PC)**, Polished Brass**(PB)**, Brushed Nickel**(BN)**,	$ 288
DDWO-WH		$ 288
DDWO-BN		$ 288
35RKBO	Finish repair kit - Case of 12 Available in White **(WH)**, or Bone **(BO)**,	$ 303
35RKWH		$ 303
CPOPBK1	Removable soft bath pillow Available colors: Black **(BK)**, White **(WH)**,	$ 115
CPOPWH1		$ 115
5715RSP	Convenient access panel Whirlpool option only	$ 240
PLL2	Pump location is applicable to whirlpools and blower location for air system No charge option Refer to technical drawing for applicable choices	$ 0
PLL3		$ 0
PLL4		$ 0
PLL5		$ 0

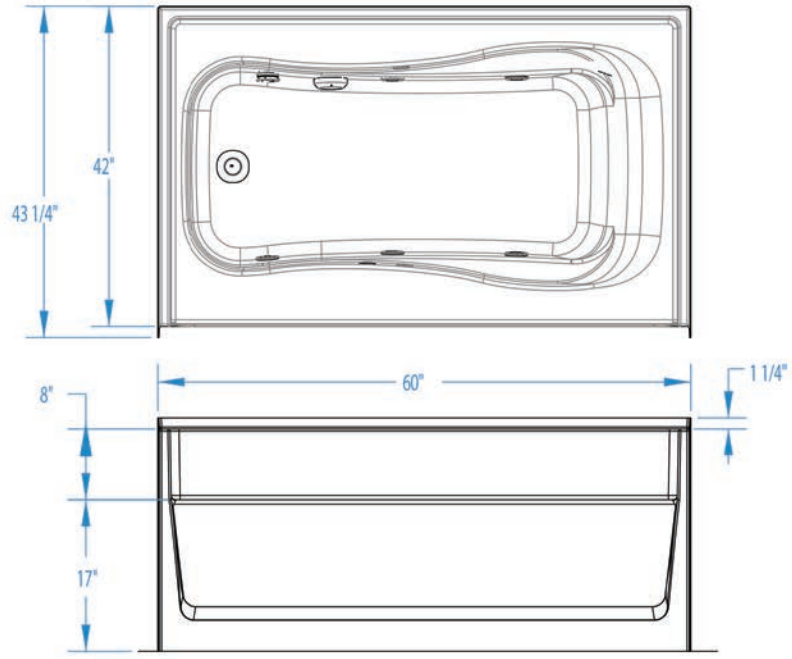
43 1/4"
42"
60"
1 1/4"
8"
17"

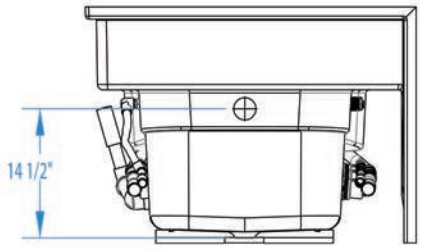
14 1/2"

6042HWM AFR



Material : AcrylX™

Min: 50 Gal
Max: 65 Gal

Features

- Alcove bath
- Integral arm rests
- Ergonomic backrest for bathing comfort
- Integral tiling flange (3T) acts as a moisture barrier
- Integral 20 in. skirt
- Slip-resistant textured floor for safety
- 8 Inch wainscot
- Left or right hand drain
- This AFR unit accommodates the installation of drain, waste and overflow above the floor
- AcrylX™ applied acrylic surface
- Whirlpool Features:
- Whirlpool pump
- 6 directional hydrotherapy jets
- Pneumatic on/off control
- Color matched trim
- Advanced safety suction system

6042HWM AFR - PRICING CATEGORY : EH

SKU	System	Color	Configuration	Dimensions & Weight	MSRP
6042HWML-AL	Soaker - No System	Almond	Left-hand Drain	60” x 42” x 28” / 84 lb 1524mm x 1067mm x 711mm / 35.83 kg	$ 1032
6042HWML-BI		Biscuit			$ 1032
6042HWML-BK		Black			$ 1352
6042HWML-BO		Bone			$ 1032
6042HWML-LN		Linen			$ 1032
6042HWML-ME		Mexican Sand			$ 1352
6042HWML-SD		Sandbar			$ 1352
6042HWML-ST		Sterling Silver			$ 1352
6042HWML-WH		White			$ 997
6042HWMR-AL		Almond	Right-hand Drain		$ 1032
6042HWMR-BI		Biscuit			$ 1032
6042HWMR-BK		Black			$ 1352
6042HWMR-BO		Bone			$ 1032
6042HWMR-LN		Linen			$ 1032

6042HWM AFR - PRICING CATEGORY : EH

SKU	System	Color	Configuration	Dimensions & Weight	MSRP
6042HWMR-ME	Soaker - No System	Mexican Sand	Right-hand Drain	60” x 42” x 28” / 84 lb 1524mm x 1067mm x 711mm / 35.83 kg	$ 1352
6042HWMR-SD		Sandbar			$ 1352
6042HWMR-ST		Sterling Silver			$ 1352
6042HWMR-WH		White			$ 997

OPTIONS

SKU	Description	MSRP
DDWO-PC	Designer drain waste & overflow kit Available finishes: White **(WH)**, Bone **(BO)**, Polished Chrome **(PC)**, Polished Brass**(PB)**, Brushed Nickel**(BN)**,	$ 288
DDWO-PB	Designer drain waste & overflow kit Available finishes: White **(WH)**, Bone **(BO)**, Polished Chrome **(PC)**, Polished Brass**(PB)**, Brushed Nickel**(BN)**,	$ 288
DDWO-BO	Designer drain waste & overflow kit Available finishes: White **(WH)**, Bone **(BO)**, Polished Chrome **(PC)**, Polished Brass**(PB)**, Brushed Nickel**(BN)**,	$ 288
DDWO-WH		$ 288
DDWO-BN		$ 288
35RKBO	Finish repair kit - Case of 12 Available in White **(WH)**, or Bone **(BO)**,	$ 303
35RKWH		$ 303

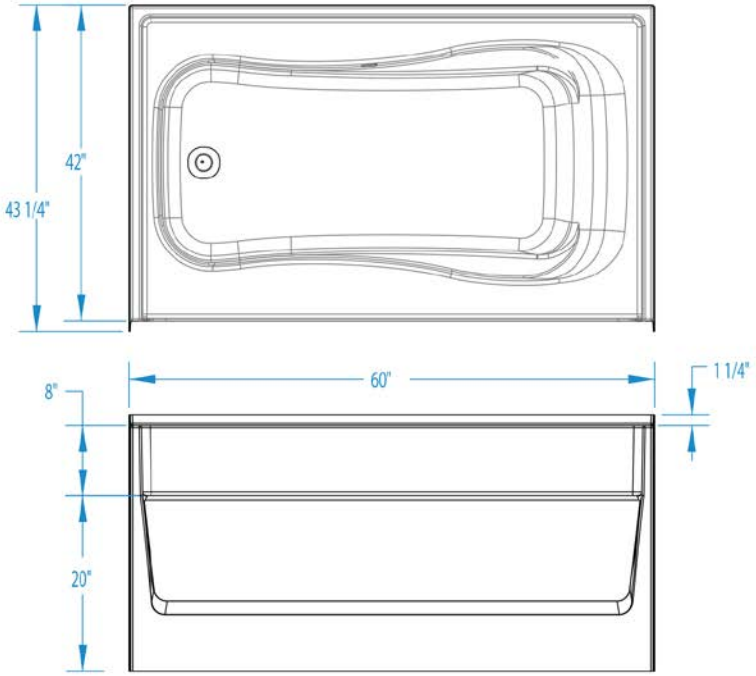

AFR: Allows for above the floor installation of waste, overflow and drainage.

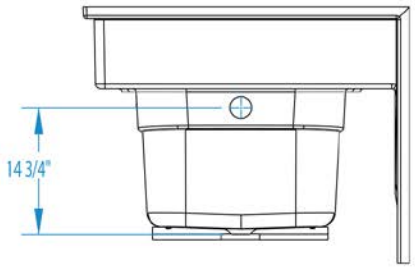

6042OVAL





Material : AcrylX™

Min: 55 Gal
Max: 60 Gal

Features

- Island bath
- Deep bathing well
- Ergonomic backrest for bathing comfort
- Slip-resistant textured floor for safety
- Universal drain
- AcrylX™ applied acrylic surface
- West Zone Only
- Whirlpool Features:
- Whirlpool pump
- 6 directional hydrotherapy jets
- Pneumatic on/off control
- Color matched trim
- Advanced safety suction system

6042OVAL - PRICING CATEGORY : EH

SKU	System	Color	Configuration	Dimensions & Weight	MSRP
6042OVAL-AL	Soaker - No System	Almond	Universal	60” x 42” x 20 7/8” / 64 lb 1524mm x 1067mm x 530mm / 29.02 kg	$ 1009
6042OVAL-BI		Biscuit			$ 1009
6042OVAL-BK		Black			$ 1329
6042OVAL-BO		Bone			$ 1009
6042OVAL-LN		Linen			$ 1009
6042OVAL-ME		Mexican Sand			$ 1329
6042OVAL-SD		Sandbar			$ 1329
6042OVAL-ST		Sterling Silver			$ 1329
6042OVAL-WH		White			$ 974
6042OVALWP-BI	Whirlpool Massage	Biscuit		60” x 42” x 20 7/8” / 124 lb 1524mm x 1067mm x 530mm / 29.02 kg	$ 2801
6042OVALWP-LN		Linen			$ 2801
6042OVALWP-WH		White			$ 2766

OPTIONS

SKU	Description	MSRP
DDWO-PC	Designer drain waste & overflow kit Available finishes: White **(WH)**, Bone **(BO)**, Polished Chrome **(PC)**, Polished Brass**(PB)**, Brushed Nickel**(BN)**,	$ 288
DDWO-PB	Designer drain waste & overflow kit Available finishes: White **(WH)**, Bone **(BO)**, Polished Chrome **(PC)**, Polished Brass**(PB)**, Brushed Nickel**(BN)**,	$ 288

OPTIONS

SKU	Description	MSRP
DDWO-BO	Designer drain waste & overflow kit Available finishes: White **(WH)**, Bone **(BO)**, Polished Chrome **(PC)**, Polished Brass**(PB)**, Brushed Nickel**(BN)**,	$ 288
DDWO-WH		$ 288
DDWO-BN		$ 288
35RKBO	Finish repair kit - Case of 12 Available in White **(WH)**, or Bone **(BO)**,	$ 303
35RKWH		$ 303
CPOPBK1	Removable soft bath pillow Available colors: Black **(BK)**, White **(WH)**,	$ 115
CPOPWH1		$ 115

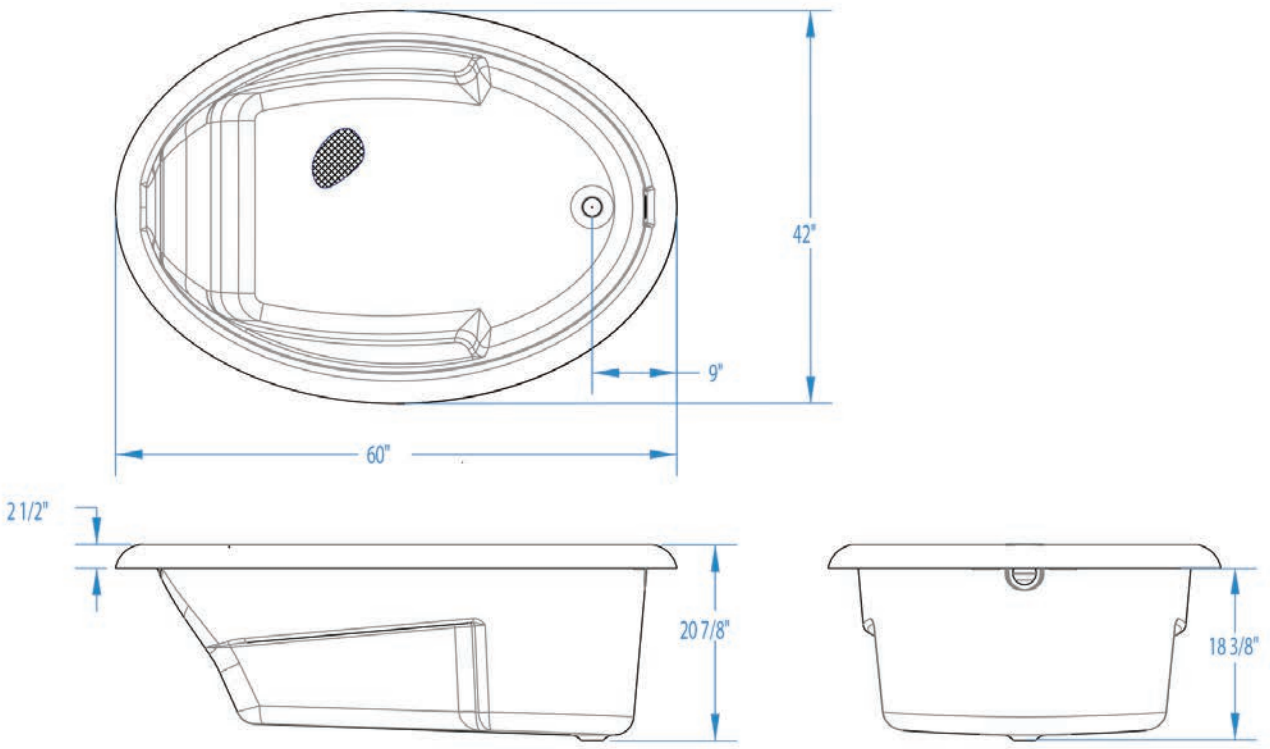
42"
9"
60"
2 1/2"
20 7/8"
18 3/8"

6042SMIN





Material : AcrylX™

Min: 45 Gal
Max: 67 Gal

Features

- Alcove bath
- Integral 18 in. skirt
- Deep bathing well
- Ergonomic backrest for bathing comfort
- Slip-resistant textured floor for safety
- Left or right hand drain
- AcrylX™ applied acrylic surface
- Whirlpool Features:
- Whirlpool pump
- 6 directional hydrotherapy jets
- Pneumatic on/off control
- Color matched trim
- Advanced safety suction system

6042SMIN - PRICING CATEGORY : EK

SKU	System	Color	Configuration	Dimensions & Weight	MSRP
6042SMINL-AL	Soaker - No System	Almond	Left-hand Drain	60” x 42” x 18” / 62 lb 1524mm x 1067mm x 457mm / 28.12 kg	$ 1022
6042SMINL-BI		Biscuit			$ 1022
6042SMINL-BK		Black			$ 1342
6042SMINL-BO		Bone			$ 1022
6042SMINL-LN		Linen			$ 1022
6042SMINL-ME		Mexican Sand			$ 1342
6042SMINL-SD		Sandbar			$ 1342
6042SMINL-ST		Sterling Silver			$ 1342
6042SMINL-WH		White			$ 987
6042SMINLWP-BI	Whirlpool Massage	Biscuit		60” x 42” x 18” / 102 lb 1524mm x 1067mm x 457mm / 28.12 kg	$ 2437
6042SMINLWP-LN		Linen			$ 2437
6042SMINLWP-WH		White			$ 2402
6042SMINR-AL	Soaker - No System	Almond	Right-hand Drain	60” x 42” x 18” / 62 lb 1524mm x 1067mm x 457mm / 28.12 kg	$ 1022
6042SMINR-BI		Biscuit			$ 1022
6042SMINR-BK		Black			$ 1342
6042SMINR-BO		Bone			$ 1022
6042SMINR-LN		Linen			$ 1022
6042SMINR-ME		Mexican Sand			$ 1342

6042SMIN - PRICING CATEGORY : EK

SKU	System	Color	Configuration	Dimensions & Weight	MSRP
6042SMINR-SD	Soaker - No System	Sandbar	Right-hand Drain	60” x 42” x 18” / 62 lb 1524mm x 1067mm x 457mm / 28.12 kg	$ 1342
6042SMINR-ST		Sterling Silver			$ 1342
6042SMINR-WH		White			$ 987
6042SMINRWP-BI	Whirlpool Massage	Biscuit		60” x 42” x 18” / 102 lb 1524mm x 1067mm x 457mm / 28.12 kg	$ 2437
6042SMINRWP-LN		Linen			$ 2437
6042SMINRWP-WH		White			$ 2402

OPTIONS

SKU	Description	MSRP
DDWO-PC	Designer drain waste & overflow kit Available finishes: White **(WH)**, Bone **(BO)**, Polished Chrome **(PC)**, Polished Brass**(PB)**, Brushed Nickel**(BN)**,	$ 288
DDWO-PB	Designer drain waste & overflow kit Available finishes: White **(WH)**, Bone **(BO)**, Polished Chrome **(PC)**, Polished Brass**(PB)**, Brushed Nickel**(BN)**,	$ 288
DDWO-BO	Designer drain waste & overflow kit Available finishes: White **(WH)**, Bone **(BO)**, Polished Chrome **(PC)**, Polished Brass**(PB)**, Brushed Nickel**(BN)**,	$ 288
DDWO-WH		$ 288
DDWO-BN		$ 288
35RKBO	Finish repair kit - Case of 12 Available in White **(WH)**, or Bone **(BO)**,	$ 303
35RKWH		$ 303
CPOPBK1	Removable soft bath pillow Available colors: Black **(BK)**, White **(WH)**,	$ 115
CPOPWH1		$ 115

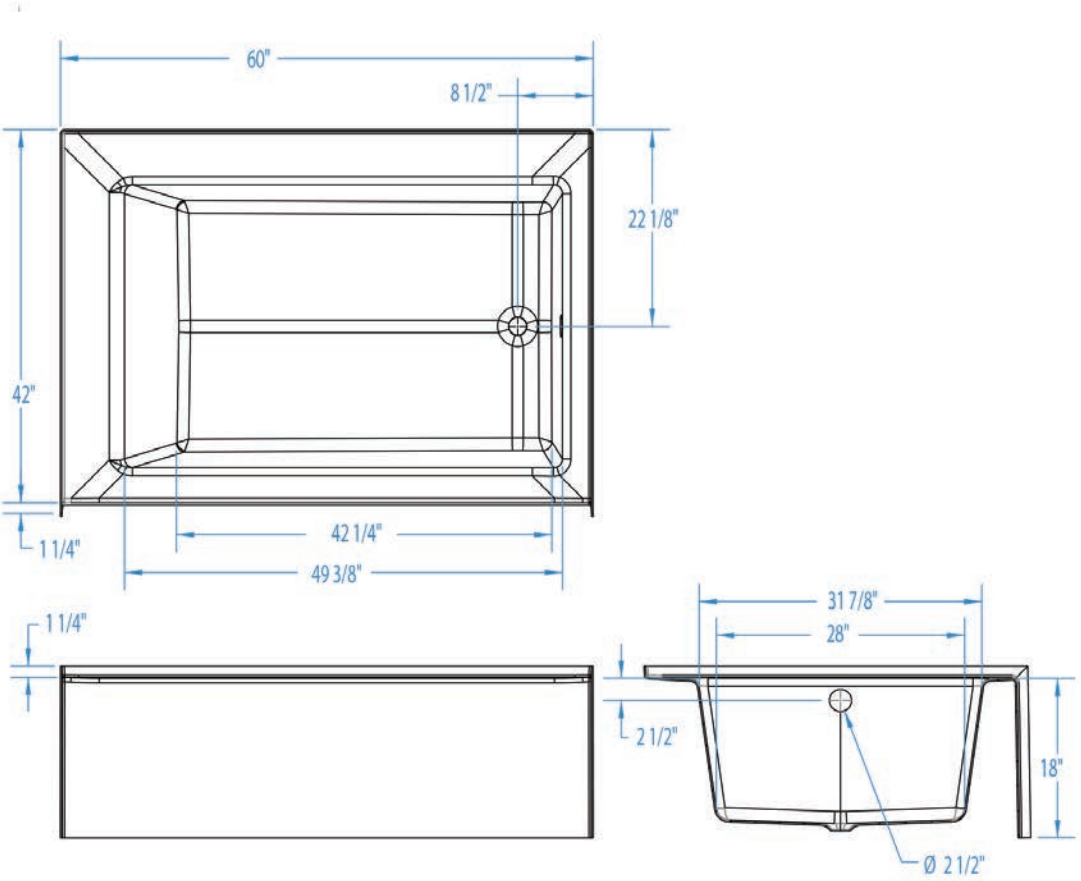
60"
8 1/2"
22 1/8"
42"
1 1/4"
42 1/4"
49 3/8"
1 1/4"
31 7/8"
28"
2 1/2"
18"
Ø 2 1/2"

6042SMINM AFR





Material : AcrylX™

Min: 45 Gal
Max: 67 Gal

Features

- Alcove bath
- Integral 21 in. skirt
- Deep bathing well
- Ergonomic backrest for bathing comfort
- This AFR unit accommodates the installation of drain, waste and overflow above the floor
- Slip-resistant textured floor for safety
- Left or right hand drain
- AcrylX™ applied acrylic surface
- Whirlpool Features:
- Whirlpool pump
- 6 directional hydrotherapy jets
- Pneumatic on/off control
- Color matched trim
- Advanced safety suction system

6042SMINM AFR - PRICING CATEGORY : EK

SKU	System	Color	Configuration	Dimensions & Weight	MSRP
6042SMINML-AL	Soaker - No System	Almond	Left-hand Drain	60” x 42” x 21” / 64 lb 1524mm x 1067mm x 533mm / 29.02 kg	$ 1058
6042SMINML-BI		Biscuit			$ 1058
6042SMINML-BK		Black			$ 1378
6042SMINML-BO		Bone			$ 1058
6042SMINML-LN		Linen			$ 1058
6042SMINML-ME		Mexican Sand			$ 1378
6042SMINML-SD		Sandbar			$ 1378
6042SMINML-ST		Sterling Silver			$ 1378
6042SMINML-WH		White			$ 1023
6042SMINMR-AL		Almond	Right-hand Drain		$ 1058
6042SMINMR-BI		Biscuit			$ 1058
6042SMINMR-BK		Black			$ 1378
6042SMINMR-BO		Bone			$ 1058
6042SMINMR-LN		Linen			$ 1058
6042SMINMR-ME		Mexican Sand			$ 1378
6042SMINMR-SD		Sandbar			$ 1378

6042SMINM AFR - PRICING CATEGORY : EK

SKU	System	Color	Configuration	Dimensions & Weight	MSRP
6042SMINMR-ST	Soaker - No System	Sterling Silver	Right-hand Drain	60” x 42” x 21” / 64 lb 1524mm x 1067mm x 533mm / 29.02 kg	$ 1378
6042SMINMR-WH		White			$ 1023

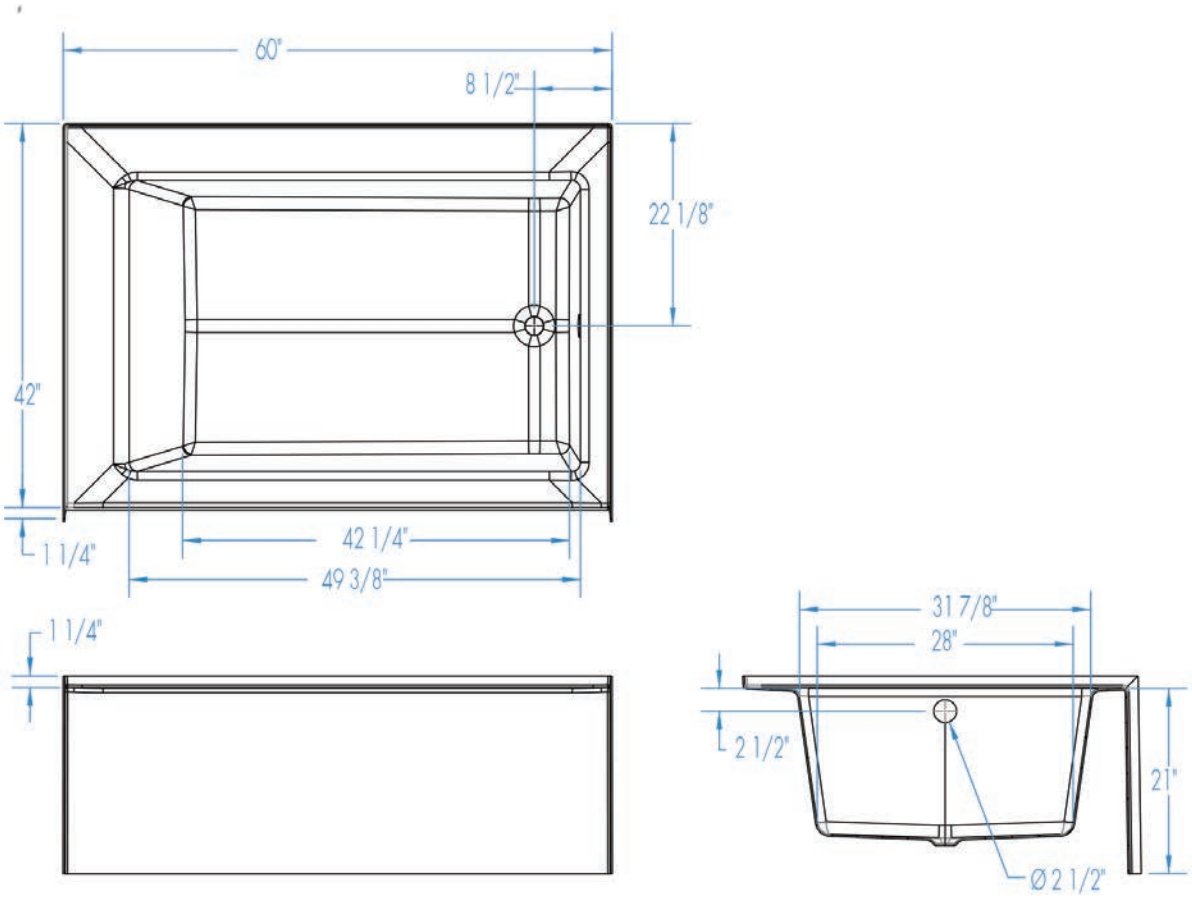
60"
8 1/2"
22 1/8"
42"
1 1/4"
42 1/4"
49 3/8"
1 1/4"
31 7/8"
28"
2 1/2"
21"
Ø 2 1/2"

6042TW



Material : AcrylX™

Min: 50 Gal
Max: 67 Gal

Features

- Alcove bath
- Smooth tile pattern (Wainscot only)
- 8-3/4 Inch wainscot
- Ergonomic backrest for bathing comfort
- Integral tiling flange (3T) acts as a moisture barrier
- Integral 17-1/2 in. skirt
- Left or right hand drain
- AcrylX™ applied acrylic surface
- Whirlpool Features:
- Whirlpool pump
- 6 directional hydrotherapy jets
- Pneumatic on/off control
- Color matched trim
- Advanced safety suction system

6042TW - PRICING CATEGORY : EH

SKU	System	Color	Configuration	Dimensions & Weight	MSRP
6042TWL-AL	Soaker - No System	Almond	Left-hand Drain	60” x 42” x 26 1/4” / 85 lb 1524mm x 1067mm x 667mm / 38.55 kg	$ 934
6042TWL-BI		Biscuit			$ 934
6042TWL-BK		Black			$ 1254
6042TWL-BO		Bone			$ 934
6042TWL-LN		Linen			$ 934
6042TWL-ME		Mexican Sand			$ 1254
6042TWL-SD		Sandbar			$ 1254
6042TWL-ST		Sterling Silver			$ 1254
6042TWL-WH		White			$ 899
6042TWLWP-BI	Whirlpool Massage	Biscuit		60” x 42” x 26 1/4” / 135 lb 1524mm x 1067mm x 667mm / 38.55 kg	$ 2953
6042TWLWP-LN		Linen			$ 2953
6042TWLWP-WH		White			$ 2918
6042TWR-AL	Soaker - No System	Almond	Right-hand Drain	60” x 42” x 26 1/4” / 85 lb 1524mm x 1067mm x 667mm / 38.55 kg	$ 934
6042TWR-BI		Biscuit			$ 934
6042TWR-BK		Black			$ 1254
6042TWR-BO		Bone			$ 934
6042TWR-LN		Linen			$ 934

6042TW - PRICING CATEGORY : EH

SKU	System	Color	Configuration	Dimensions & Weight	MSRP
6042TWR-ME	Soaker - No System	Mexican Sand	Right-hand Drain	60” x 42” x 26 1/4” / 85 lb 1524mm x 1067mm x 667mm / 38.55 kg	$ 1254
6042TWR-SD		Sandbar			$ 1254
6042TWR-ST		Sterling Silver			$ 1254
6042TWR-WH		White			$ 899
6042TWRWP-BI	Whirlpool Massage	Biscuit		60” x 42” x 26 1/4” / 135 lb 1524mm x 1067mm x 667mm / 38.55 kg	$ 2953
6042TWRWP-LN		Linen			$ 2953
6042TWRWP-WH		White			$ 2918

OPTIONS

SKU	Description	MSRP
DDWO-PC	Designer drain waste & overflow kit Available finishes: White **(WH)**, Bone **(BO)**, Polished Chrome **(PC)**, Polished Brass**(PB)**, Brushed Nickel**(BN)**,	$ 288
DDWO-PB	Designer drain waste & overflow kit Available finishes: White **(WH)**, Bone **(BO)**, Polished Chrome **(PC)**, Polished Brass**(PB)**, Brushed Nickel**(BN)**,	$ 288
DDWO-BO	Designer drain waste & overflow kit Available finishes: White **(WH)**, Bone **(BO)**, Polished Chrome **(PC)**, Polished Brass**(PB)**, Brushed Nickel**(BN)**,	$ 288
DDWO-WH		$ 288
DDWO-BN		$ 288
35RKBO	Finish repair kit - Case of 12 Available in White **(WH)**, or Bone **(BO)**,	$ 303
35RKWH		$ 303
CPOPBK1	Removable soft bath pillow Available colors: Black **(BK)**, White **(WH)**,	$ 115
CPOPWH1		$ 115
5715RSP	Convenient access panel Whirlpool option only	$ 240
PLL2	Pump location is applicable to whirlpools and blower location for air system No charge option Refer to technical drawing for applicable choices	$ 0
PLL3		$ 0
PLL4		$ 0
PLL5		$ 0

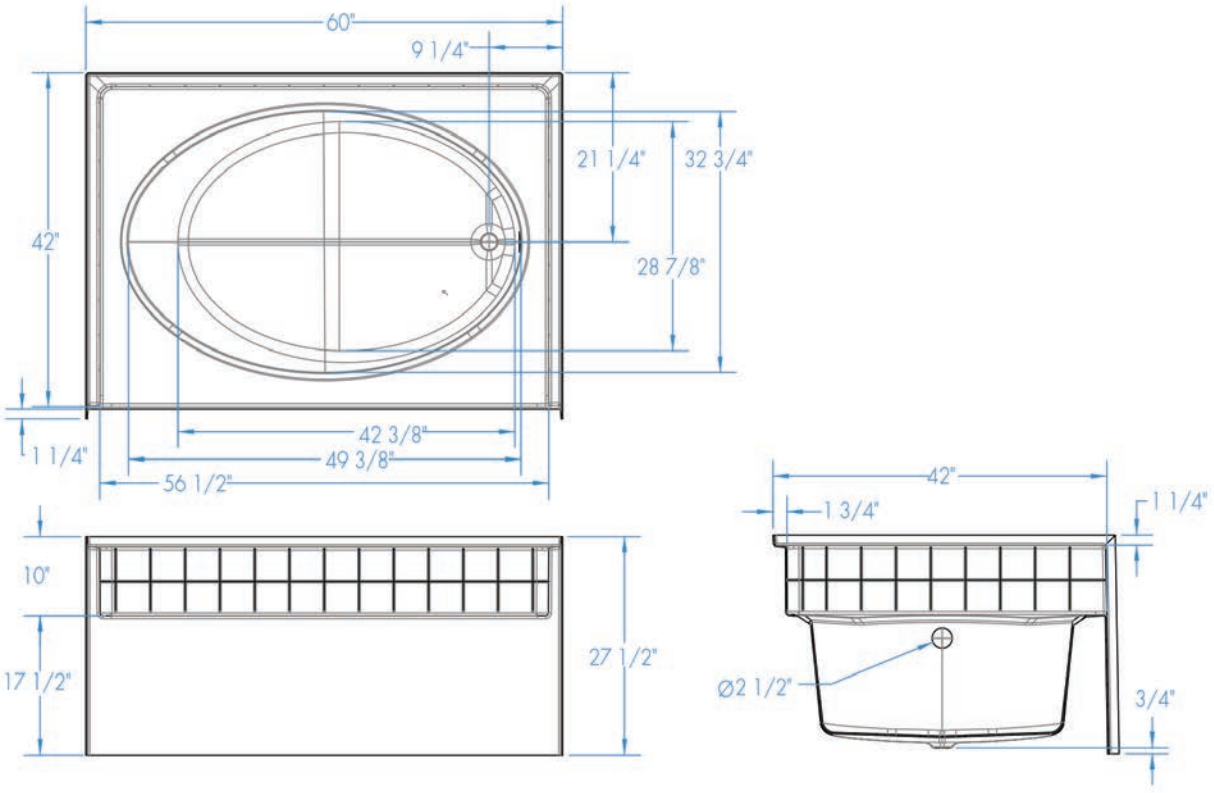
60"
9 1/4"
21 1/4"
32 3/4"
42"
28 7/8"
42 3/8"
1 1/4"
49 3/8"
56 1/2"
10"
27 1/2"
17 1/2"
42"
1 3/4"
1 1/4"
Ø2 1/2"
3/4"

6636DMIN



Material : AcrylX™

Min: 47 Gal
Max: 79 Gal

Features

- Island bath
- Deep bathing well
- Ergonomic backrest for bathing comfort
- Slip-resistant textured floor for safety
- Universal drain
- AcrylX™ Applied Acrylic surface
- Whirlpool Features:
- Whirlpool pump
- 6 directional hydrotherapy jets
- Pneumatic on/off control
- Color matched trim
- Advanced safety suction system

6636DMIN - PRICING CATEGORY : EK

SKU	System	Color	Configuration	Dimensions & Weight	MSRP
6636DMIN-AL	Soaker - No System	Almond	Universal	66” x 36” x 19” / 54 lb 1676mm x 914mm x 483mm / 24.49 kg	$ 1027
6636DMIN-BI		Biscuit			$ 1027
6636DMIN-BK		Black			$ 1347
6636DMIN-BO		Bone			$ 1027
6636DMIN-LN		Linen			$ 1027
6636DMIN-ME		Mexican Sand			$ 1347
6636DMIN-SD		Sandbar			$ 1347
6636DMIN-ST		Sterling Silver			$ 1347
6636DMIN-WH		White			$ 992
6636DMINWP-BI	Whirlpool Massage	Biscuit		66” x 36” x 19” / 94 lb 1676mm x 914mm x 483mm / 24.49 kg	$ 2461
6636DMINWP-LN		Linen			$ 2461
6636DMINWP-WH		White			$ 2426

OPTIONS

SKU	Description	MSRP
DDWO-PC	Designer drain waste & overflow kit Available finishes: White **(WH)**, Bone **(BO)**, Polished Chrome **(PC)**, Polished Brass**(PB)**, Brushed Nickel**(BN)**,	$ 288
DDWO-PB	Designer drain waste & overflow kit Available finishes: White **(WH)**, Bone **(BO)**, Polished Chrome **(PC)**, Polished Brass**(PB)**, Brushed Nickel**(BN)**,	$ 288

OPTIONS

SKU	Description	MSRP
DDWO-BO	Designer drain waste & overflow kit Available finishes: White **(WH)**, Bone **(BO)**, Polished Chrome **(PC)**, Polished Brass**(PB)**, Brushed Nickel**(BN)**,	$ 288
DDWO-WH		$ 288
DDWO-BN		$ 288
35RKBO	Finish repair kit - Case of 12 Available in White **(WH)**, or Bone **(BO)**,	$ 303
35RKWH		$ 303
CPOPBK1	Removable soft bath pillow Available colors: Black **(BK)**, White **(WH)**,	$ 115
CPOPWH1		$ 115

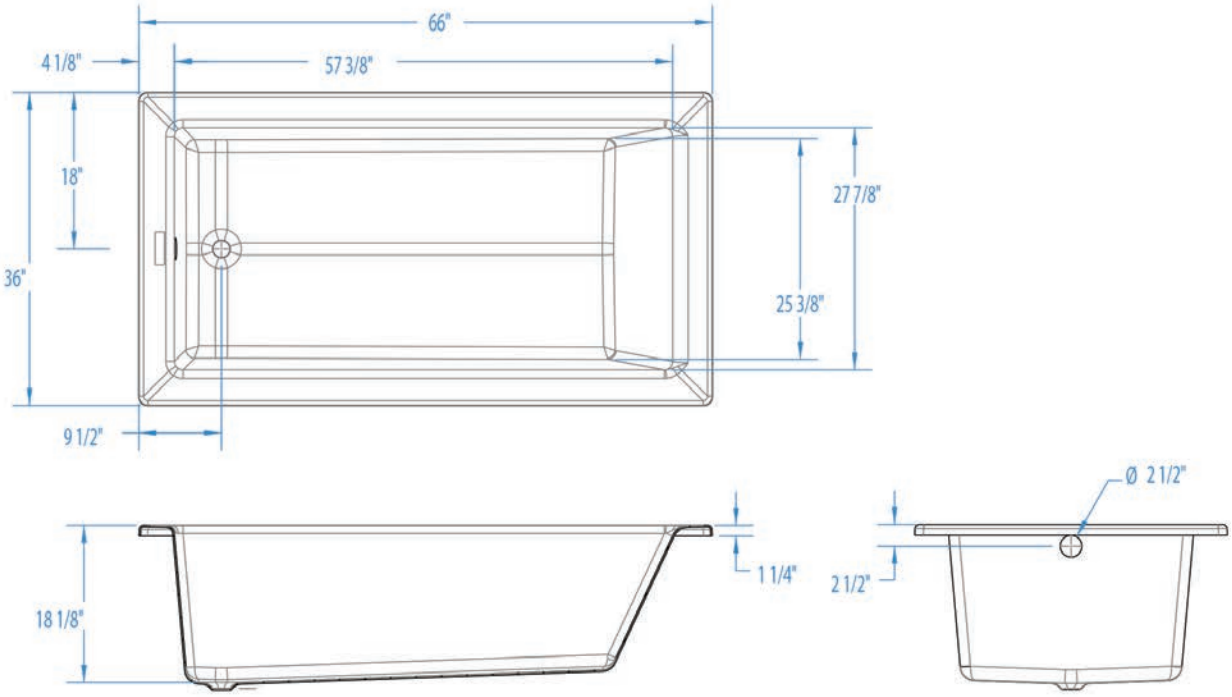
66"
41/8"
57 3/8"
18"
36"
27 7/8"
25 3/8"
9 1/2"
Ø 2 1/2"
1 1/4"
2 1/2"
18 1/8"

6636SMIN



Material : AcrylX™

Min: 45 Gal
Max: 52 Gal

Features

- Alcove bath
- Integral 18 in. skirt
- Deep bathing well
- Ergonomic backrest for bathing comfort
- Slip-resistant textured floor for safety
- Left or right hand drain
- AcrylX™ applied acrylic surface
- Whirlpool Features:
- Whirlpool pump
- 6 directional hydrotherapy jets
- Pneumatic on/off control
- Color matched trim
- Advanced safety suction system

6636SMIN - PRICING CATEGORY : EK

SKU	System	Color	Configuration	Dimensions & Weight	MSRP
6636SMINL-AL	Soaker - No System	Almond	Left-hand Drain	66” x 36” x 18” / 63 lb 1676mm x 914mm x 457mm / 28.57 kg	$ 1027
6636SMINL-BI		Biscuit			$ 1027
6636SMINL-BK		Black			$ 1347
6636SMINL-BO		Bone			$ 1027
6636SMINL-LN		Linen			$ 1027
6636SMINL-ME		Mexican Sand			$ 1347
6636SMINL-SD		Sandbar			$ 1347
6636SMINL-ST		Sterling Silver			$ 1347
6636SMINL-WH		White			$ 992
6636SMINLWP-BI	Whirlpool Massage	Biscuit		66” x 36” x 18” / 103 lb 1676mm x 914mm x 457mm / 28.57 kg	$ 2461
6636SMINLWP-LN		Linen			$ 2461
6636SMINLWP-WH		White			$ 2426
6636SMINR-AL	Soaker - No System	Almond	Right-hand Drain	66” x 36” x 18” / 63 lb 1676mm x 914mm x 457mm / 28.57 kg	$ 1027
6636SMINR-BI		Biscuit			$ 1027
6636SMINR-BK		Black			$ 1347
6636SMINR-BO		Bone			$ 1027
6636SMINR-LN		Linen			$ 1027
6636SMINR-ME		Mexican Sand			$ 1347

6636SMIN - PRICING CATEGORY : EK

SKU	System	Color	Configuration	Dimensions & Weight	MSRP
6636SMINR-SD	Soaker - No System	Sandbar	Right-hand Drain	66” x 36” x 18” / 63 lb 1676mm x 914mm x 457mm / 28.57 kg	$ 1347
6636SMINR-ST		Sterling Silver			$ 1347
6636SMINR-WH		White			$ 992
6636SMINRWP-BI	Whirlpool Massage	Biscuit		66” x 36” x 18” / 103 lb 1676mm x 914mm x 457mm / 28.57 kg	$ 2461
6636SMINRWP-LN		Linen			$ 2461
6636SMINRWP-WH		White			$ 2426

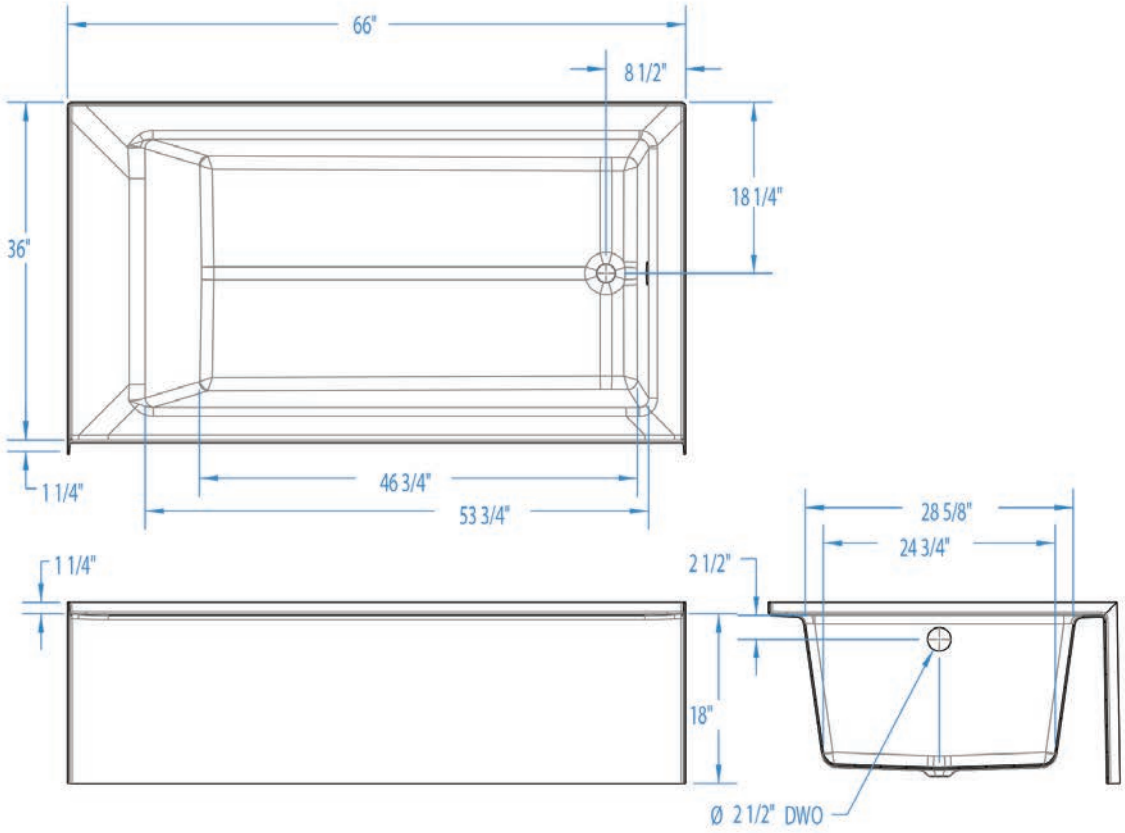
66"
8 1/2"
18 1/4"
36"
1 1/4"
46 3/4"
53 3/4"
1 1/4"
2 1/2"
28 5/8"
24 3/4"
18"
Ø 2 1/2" DWO

6636SMINM AFR





Material : AcrylX™

Min: 45 Gal
Max: 52 Gal

Features

- Alcove bath
- Integral 21 in. skirt
- Deep bathing well
- Ergonomic backrest for bathing comfort
- This AFR unit accommodates the installation of drain, waste and overflow above the floor
- Slip-resistant textured floor for safety
- Left or right hand drain
- AcrylX™ applied acrylic surface
- Whirlpool Features:
- Whirlpool pump
- 6 directional hydrotherapy jets
- Pneumatic on/off control
- Color matched trim
- Advanced safety suction system

6636SMINM AFR - PRICING CATEGORY : EK

SKU	System	Color	Configuration	Dimensions & Weight	MSRP
6636SMINML-AL	Soaker - No System	Almond	Left-hand Drain	66” x 36” x 21” / 63 lb 1676mm x 914mm x 533mm / 28.57 kg	$ 1066
6636SMINML-BI		Biscuit			$ 1066
6636SMINML-BK		Black			$ 1386
6636SMINML-BO		Bone			$ 1066
6636SMINML-LN		Linen			$ 1066
6636SMINML-ME		Mexican Sand			$ 1386
6636SMINML-SD		Sandbar			$ 1386
6636SMINML-ST		Sterling Silver			$ 1386
6636SMINML-WH		White			$ 1031
6636SMINMR-AL		Almond	Right-hand Drain		$ 1066
6636SMINMR-BI		Biscuit			$ 1066
6636SMINMR-BK		Black			$ 1386
6636SMINMR-BO		Bone			$ 1066
6636SMINMR-LN		Linen			$ 1066
6636SMINMR-ME		Mexican Sand			$ 1386
6636SMINMR-SD		Sandbar			$ 1386

6636SMINM AFR - PRICING CATEGORY : EK

SKU	System	Color	Configuration	Dimensions & Weight	MSRP
6636SMINMR-ST	Soaker - No System	Sterling Silver	Right-hand Drain	66” x 36” x 21” / 63 lb 1676mm x 914mm x 533mm / 28.57 kg	$ 1386
6636SMINMR-WH		White			$ 1031

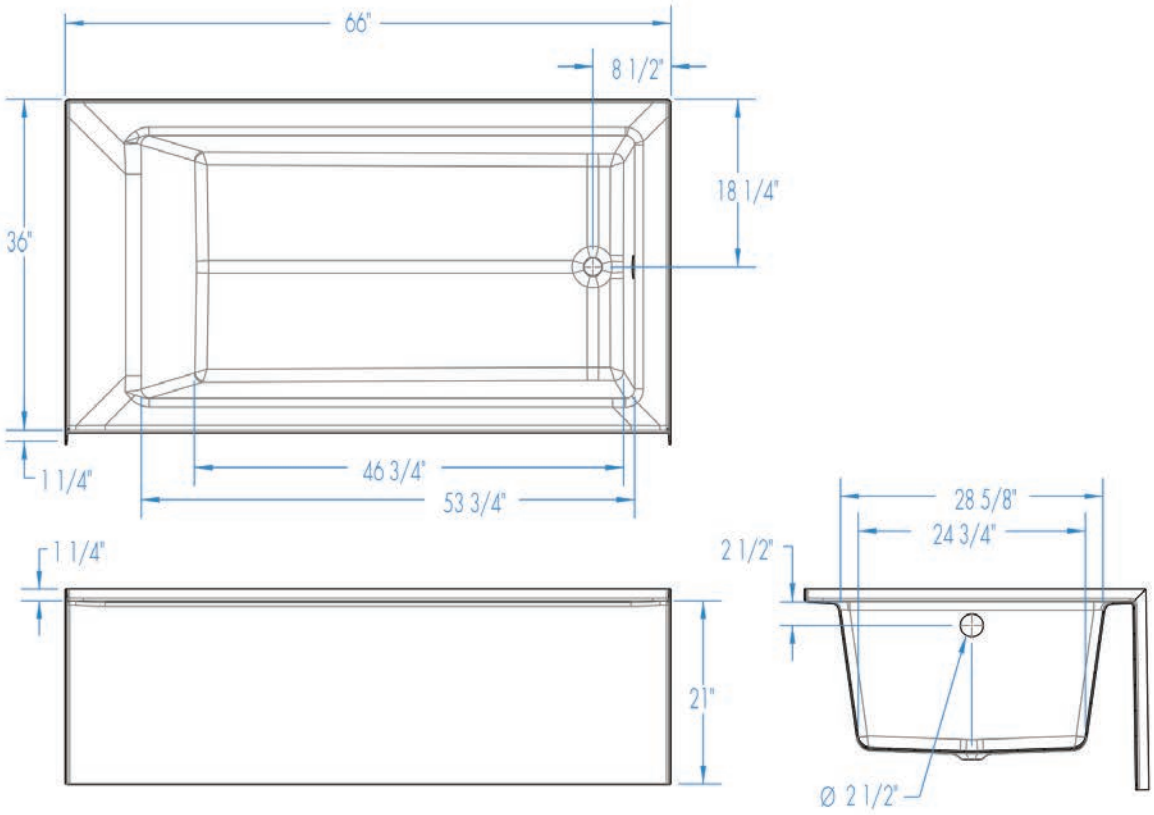
66"
8 1/2"
18 1/4"
36"
1 1/4"
46 3/4"
53 3/4"
1 1/4"
21"
28 5/8"
24 3/4"
2 1/2"
Ø 2 1/2"

7236DMIN



Material : AcrylX™

Min: 51 Gal
Max: 88 Gal

Features

- Island bath
- Deep bathing well
- Ergonomic backrest for bathing comfort
- Can be used in an undermount or drop-in application
- Slip-resistant textured floor for safety
- Universal drain
- AcrylX™ applied acrylic surface
- Whirlpool Features:
- Whirlpool pump
- 6 directional hydrotherapy jets
- Pneumatic on/off control
- Color matched trim
- Advanced safety suction system

7236DMIN - PRICING CATEGORY : EK

SKU	System	Color	Configuration	Dimensions & Weight	MSRP
7236DMIN-AL	Soaker - No System	Almond	Universal	72” x 36” x 19” / 56 lb 1829mm x 914mm x 483mm / 25.4 kg	$ 1119
7236DMIN-BI		Biscuit			$ 1119
7236DMIN-BK		Black			$ 1439
7236DMIN-LN		Linen			$ 1119
7236DMIN-ME		Mexican Sand			$ 1439
7236DMIN-SD		Sandbar			$ 1439
7236DMIN-ST		Sterling Silver			$ 1439
7236DMIN-WH		White			$ 1084
7236DMINWP-BI	Whirlpool Massage	Biscuit		72” x 36” x 19” / 96 lb 1829mm x 914mm x 483mm / 25.4 kg	$ 2551
7236DMINWP-LN		Linen			$ 2551
7236DMINWP-WH		White			$ 2516
7736DMIN-BO	Soaker - No System	Bone		72” x 36” x 19” / 56 lb 1829mm x 914mm x 483mm / 25.4 kg	$ 1119

OPTIONS

SKU	Description	MSRP
DDWO-PC	Designer drain waste & overflow kit Available finishes: White **(WH)**, Bone **(BO)**, Polished Chrome **(PC)**, Polished Brass**(PB)**, Brushed Nickel**(BN)**,	$ 288

OPTIONS

SKU	Description	MSRP
DDWO-PB	Designer drain waste & overflow kit Available finishes: White **(WH)**, Bone **(BO)**, Polished Chrome **(PC)**, Polished Brass**(PB)**, Brushed Nickel**(BN)**,	$ 288
DDWO-BO	Designer drain waste & overflow kit Available finishes: White **(WH)**, Bone **(BO)**, Polished Chrome **(PC)**, Polished Brass**(PB)**, Brushed Nickel**(BN)**,	$ 288
DDWO-WH		$ 288
DDWO-BN		$ 288
35RKBO	Finish repair kit - Case of 12 Available in White **(WH)**, or Bone **(BO)**,	$ 303
35RKWH		$ 303
CPOPBK1	Removable soft bath pillow Available colors: Black **(BK)**, White **(WH)**,	$ 115
CPOPWH1		$ 115

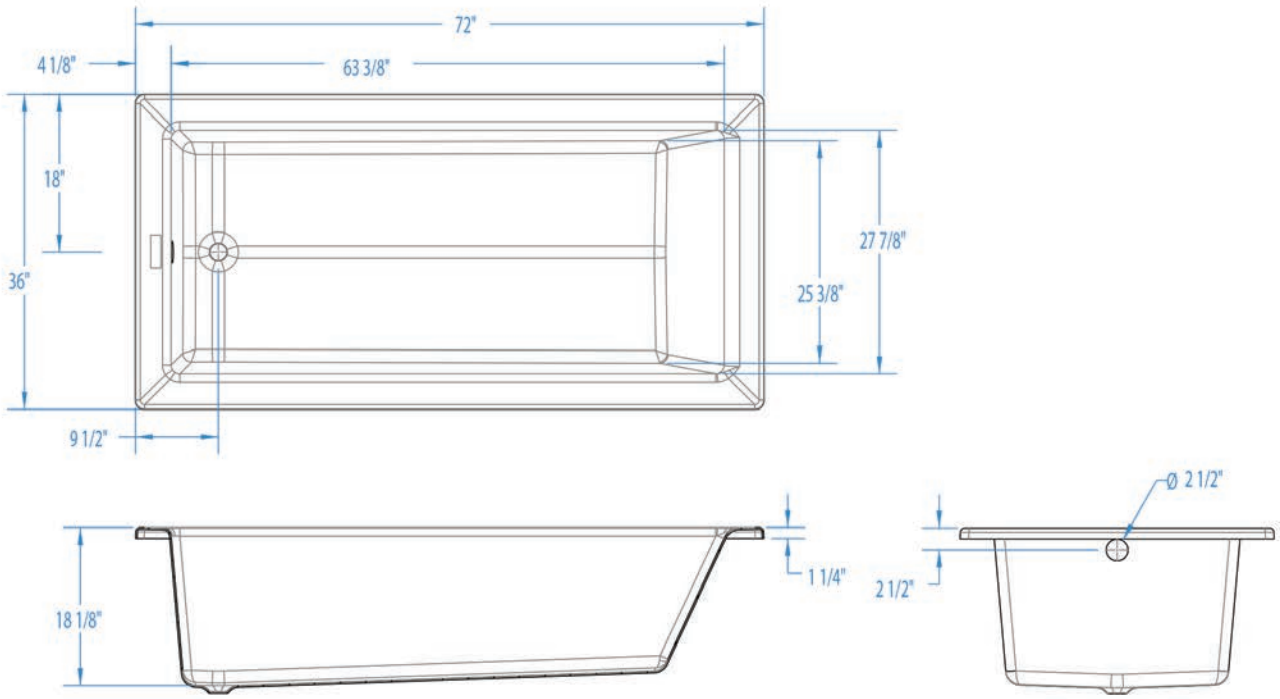
72"
4 1/8"
63 3/8"
18"
36"
27 7/8"
25 3/8"
9 1/2"
Ø 2 1/2"
1 1/4"
18 1/8"
2 1/2"

7242HCW





Material : AcrylX™

Min: 66 Gal
Max: 73 Gal

Features

- Alcove bath
- Integral arm rests
- Ergonomic backrest for bathing comfort
- Integral tiling flange (3T) acts as a moisture barrier
- Integral skirt
- 8 Inch wainscoat
- Center rear drain
- Slip-resistant textured floor for safety
- AcrylX™ applied acrylic surface
- East Zone only
- Whirlpool Features:
- Whirlpool pump
- 6 directional hydrotherapy jets
- 1 Air control
- Pneumatic on/off control
- Color matched trim
- Advanced safety suction system

7242HCW - PRICING CATEGORY : EH

SKU	System	Color	Configuration	Dimensions & Weight	MSRP
7242HCW-AL	Soaker - No System	Almond	Back Center Drain	72” x 42” x 27” / 93 lb 1829mm x 1067mm x 686mm / 42.18 kg	$ 1510
7242HCW-BI		Biscuit			$ 1510
7242HCW-BK		Black			$ 1830
7242HCW-BO		Bone			$ 1510
7242HCW-LN		Linen			$ 1510
7242HCW-ME		Mexican Sand			$ 1830
7242HCW-SD		Sandbar			$ 1830
7242HCW-ST		Sterling Silver			$ 1830
7242HCW-WH		White			$ 1475
7242HCWWP-BI	Whirlpool Massage	Biscuit		72” x 42” x 27” / 143 lb 1829mm x 1067mm x 686mm / 42.18 kg	$ 3345
7242HCWWP-LN		Linen			$ 3345
7242HCWWP-WH		White			$ 3310

OPTIONS

SKU	Description	MSRP
DDWO-PC	Designer drain waste & overflow kit Available finishes: White **(WH)**, Bone **(BO)**, Polished Chrome **(PC)**, Polished Brass**(PB)**, Brushed Nickel**(BN)**,	$ 288
DDWO-PB	Designer drain waste & overflow kit Available finishes: White **(WH)**, Bone **(BO)**, Polished Chrome **(PC)**, Polished Brass**(PB)**, Brushed Nickel**(BN)**,	$ 288
DDWO-BO	Designer drain waste & overflow kit Available finishes: White **(WH)**, Bone **(BO)**, Polished Chrome **(PC)**, Polished Brass**(PB)**, Brushed Nickel**(BN)**,	$ 288
DDWO-WH		$ 288
DDWO-BN		$ 288
35RKBO	Finish repair kit - Case of 12 Available in White **(WH)**, or Bone **(BO)**,	$ 303
35RKWH		$ 303
CPOPBK1	Removable soft bath pillow Available colors: Black **(BK)**, White **(WH)**,	$ 115
CPOPWH1		$ 115
4816RSP	Convenient access panel Whirlpool option only	$ 240
PLL2	Pump location is applicable to whirlpools and blower location for air system No charge option Refer to technical drawing for applicable choices	$ 0

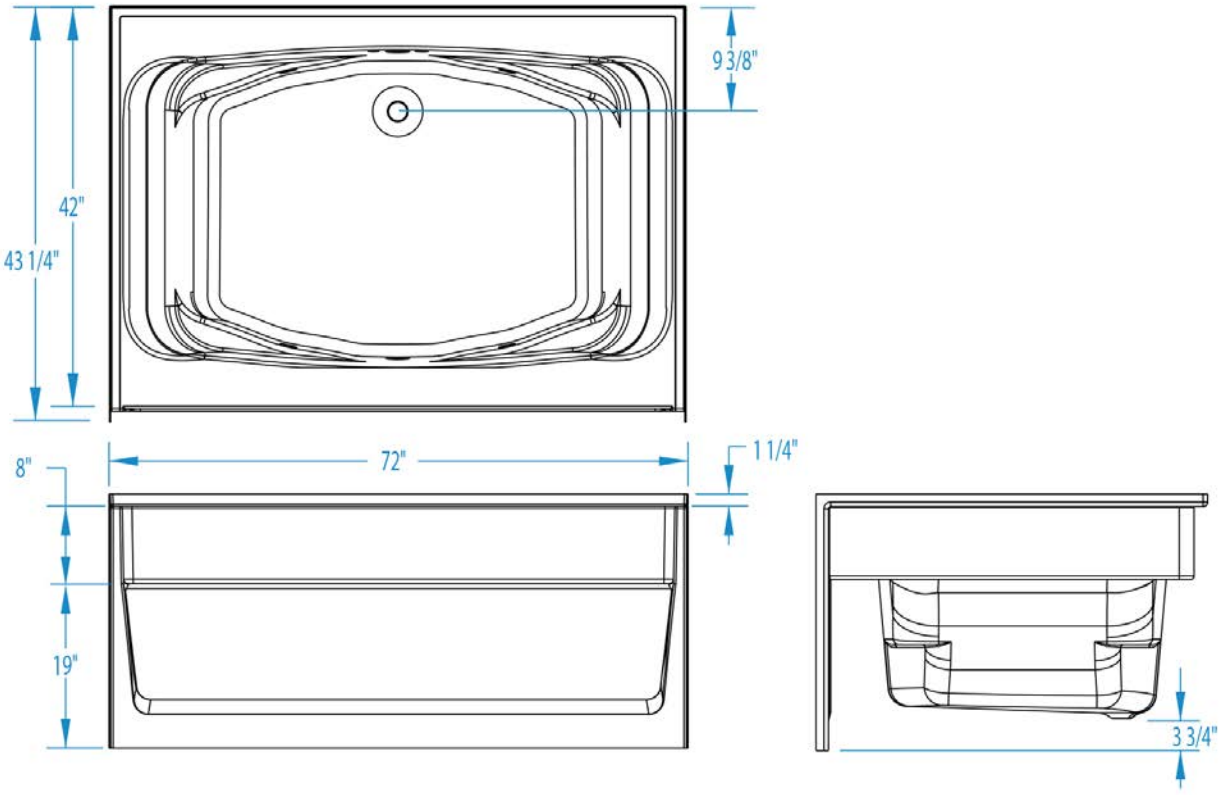
9 3/8"
42"
43 1/4"
8"
72"
1 1/4"
19"
3 3/4"

Alana I



Material : AcrylX™

Min: 50 Gal
Max: 55 Gal

Features

- Island bath
- Deep bathing well
- Ergonomic backrest for bathing comfort
- Slip-resistant textured floor for safety
- Universal drain
- AcrylX™ applied acrylic surface
- Whirlpool Features:
- Whirlpool pump
- 4 directional hydrotherapy jets
- Pneumatic on/off control
- Color matched trim
- Advanced safety suction system

ALANA I - PRICING CATEGORY : EH

SKU	System	Color	Configuration	Dimensions & Weight	MSRP
2660410-AL	Soaker - No System	Almond	Universal	60” x 42” x 18 1/2” / 64 lb 1524mm x 1067mm x 470mm / 29.02 kg	$ 948
2660410-BI		Biscuit			$ 948
2660410-BK		Black			$ 1268
2660410-BO		Bone			$ 948
2660410-LN		Linen			$ 948
2660410-ME		Mexican Sand			$ 1268
2660410-SD		Sandbar			$ 1268
2660410-ST		Sterling Silver			$ 1268
2660410-WH		White			$ 913
2660411-BI	Whirlpool Massage	Biscuit		60” x 42” x 18 1/2” / 124 lb 1524mm x 1067mm x 470mm / 29.02 kg	$ 2471
2660411-LN		Linen			$ 2471
2660411-WH		White			$ 2436

OPTIONS

SKU	Description	MSRP
DDWO-PC	Designer drain waste & overflow kit Available finishes: White **(WH)**, Bone **(BO)**, Polished Chrome **(PC)**, Polished Brass**(PB)**, Brushed Nickel**(BN)**,	$ 288
DDWO-PB	Designer drain waste & overflow kit Available finishes: White **(WH)**, Bone **(BO)**, Polished Chrome **(PC)**, Polished Brass**(PB)**, Brushed Nickel**(BN)**,	$ 288

OPTIONS

SKU	Description	MSRP
DDWO-BO	Designer drain waste & overflow kit Available finishes: White **(WH)**, Bone **(BO)**, Polished Chrome **(PC)**, Polished Brass**(PB)**, Brushed Nickel**(BN)**,	$ 288
DDWO-WH		$ 288
DDWO-BN		$ 288
35RKBO	Finish repair kit - Case of 12 Available in White **(WH)**, or Bone **(BO)**,	$ 303
35RKWH		$ 303
IF4T-BC	Factory installed Available in the West zone only	$ 98
CPOPBK1	Removable soft bath pillow Available colors: Black **(BK)**, White **(WH)**,	$ 115
CPOPWH1		$ 115
PLL2	Pump location is applicable to whirlpools and blower location for air system No charge option Refer to technical drawing for applicable choices	$ 0
PLL3		$ 0
PLL4		$ 0
PLL5		$ 0

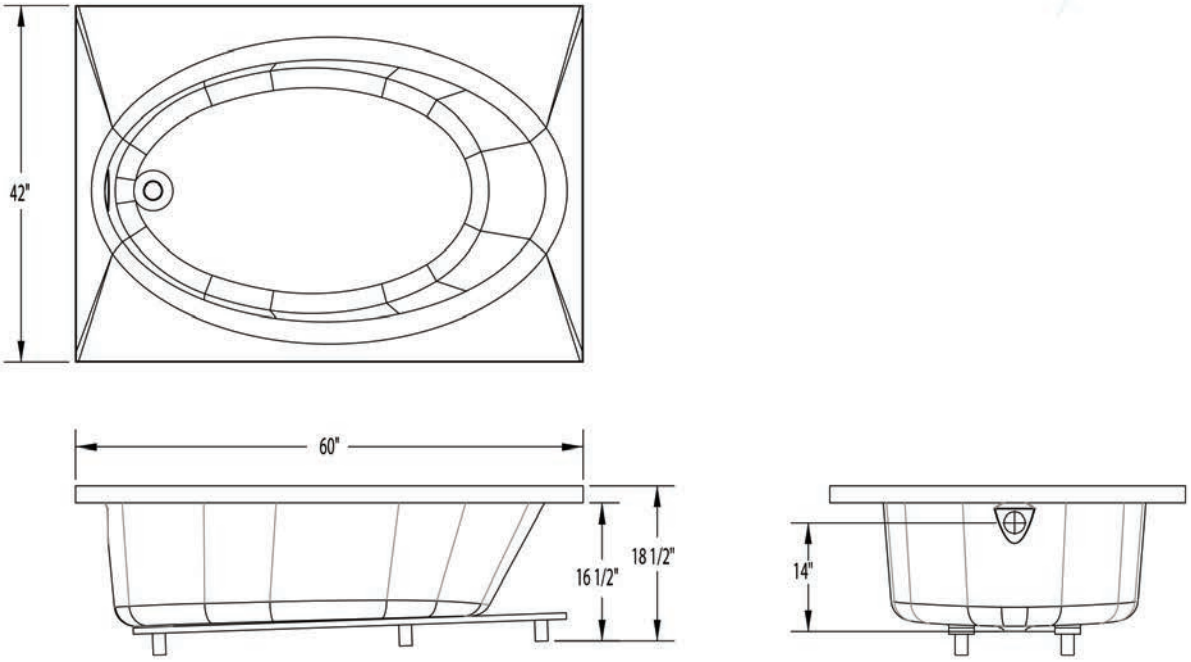
42"
60"
16 1/2"
18 1/2"
14"

Alana II





Material : AcrylX™

Min: 50 Gal
Max: 55 Gal

Features

- Alcove bath
- Integral armrests
- Ergonomic backrest for bathing comfort
- Integral tiling flange (3T) acts as a moisture barrier
- Integral 20-1/4 in. skirt
- Slip-resistant textured floor for safety
- Left or right hand drain
- AcrylX™ applied acrylic surface
- Whirlpool Features:
- Whirlpool pump
- 4 directional hydrotherapy jets
- Pneumatic on/off control
- Color matched trim
- Advanced safety suction system

ALANA II - PRICING CATEGORY : EH

SKU	System	Color	Configuration	Dimensions & Weight	MSRP
2760410L-AL	Soaker - No System	Almond	Left-hand Drain	60” x 42” x 20 1/4” / 80 lb 1524mm x 1067mm x 514mm / 36.28 kg	$ 1004
2760410L-BI		Biscuit			$ 1004
2760410L-BK		Black			$ 1324
2760410L-BO		Bone			$ 1004
2760410L-LN		Linen			$ 1004
2760410L-ME		Mexican Sand			$ 1324
2760410L-SD		Sandbar			$ 1324
2760410L-ST		Sterling Silver			$ 1324
2760410L-WH		White			$ 969
2760410R-AL		Almond	Right-hand Drain		$ 1004
2760410R-BI		Biscuit			$ 1004
2760410R-BK		Black			$ 1324
2760410R-BO		Bone			$ 1004
2760410R-LN		Linen			$ 1004
2760410R-ME		Mexican Sand			$ 1324
2760410R-SD		Sandbar			$ 1324
2760410R-ST		Sterling Silver			$ 1324

ALANA II - PRICING CATEGORY : EH

SKU	System	Color	Configuration	Dimensions & Weight	MSRP
2760410R-WH	Soaker - No System	White	Right-hand Drain	60” x 42” x 20 1/4” / 80 lb 1524mm x 1067mm x 514mm / 36.28 kg	$ 969
2760411L-BI	Whirlpool Massage	Biscuit	Left-hand Drain	60” x 42” x 20 1/4” / 130 lb 1524mm x 1067mm x 514mm / 36.28 kg	$ 3179
2760411L-LN		Linen			$ 3179
2760411L-WH		White			$ 3144
2760411R-BI		Biscuit	Right-hand Drain		$ 3179
2760411R-LN		Linen			$ 3179
2760411R-WH		White			$ 3144

OPTIONS

SKU	Description	MSRP
DDWO-PC	Designer drain waste & overflow kit Available finishes: White **(WH)**, Bone **(BO)**, Polished Chrome **(PC)**, Polished Brass**(PB)**, Brushed Nickel**(BN)**,	$ 288
DDWO-PB	Designer drain waste & overflow kit Available finishes: White **(WH)**, Bone **(BO)**, Polished Chrome **(PC)**, Polished Brass**(PB)**, Brushed Nickel**(BN)**,	$ 288
DDWO-BO	Designer drain waste & overflow kit Available finishes: White **(WH)**, Bone **(BO)**, Polished Chrome **(PC)**, Polished Brass**(PB)**, Brushed Nickel**(BN)**,	$ 288
DDWO-WH		$ 288
DDWO-BN		$ 288
35RKBO	Finish repair kit - Case of 12 Available in White **(WH)**, or Bone **(BO)**,	$ 303
35RKWH		$ 303
CPOPBK1	Removable soft bath pillow Available colors: Black **(BK)**, White **(WH)**,	$ 115
CPOPWH1		$ 115
PLL2	Pump location is applicable to whirlpools and blower location for air system No charge option Refer to technical drawing for applicable choices	$ 0
PLL3		$ 0
PLL4		$ 0
PLL5		$ 0

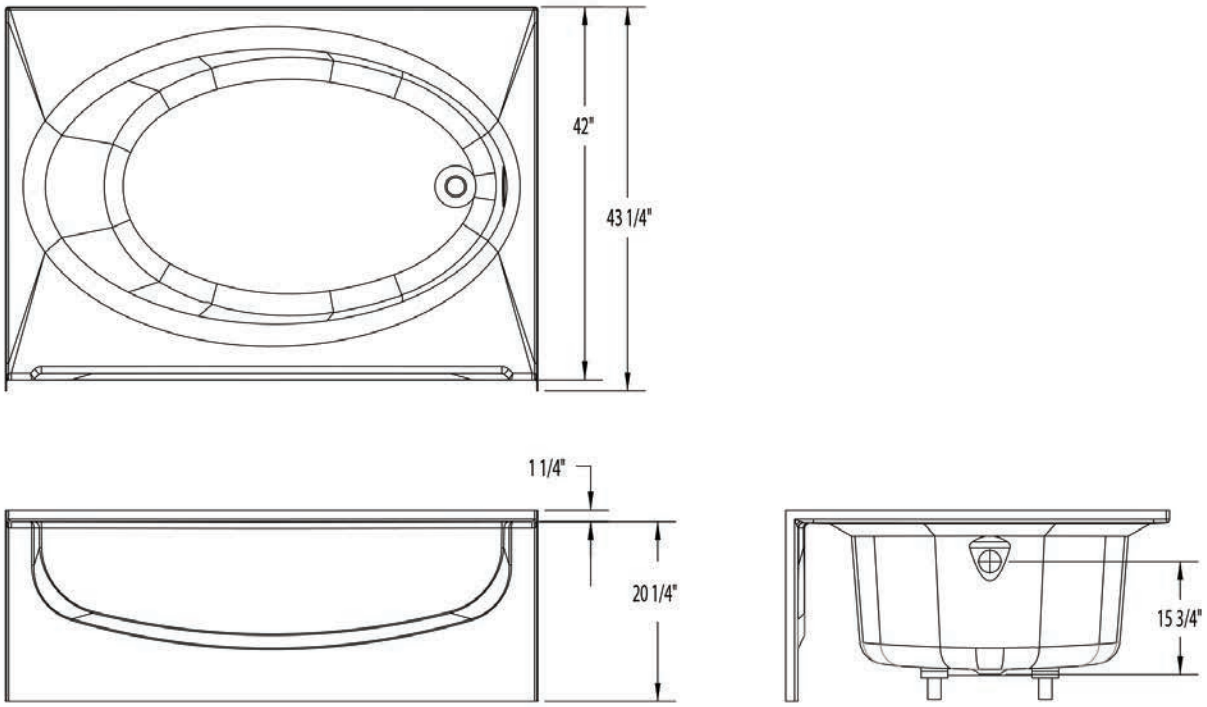
42"
43 1/4"
1 1/4"
20 1/4"
15 3/4"

Gardenia I



Material : AcrylX™

Min: 44 Gal
Max: 57 Gal

Features

- Garden tub
- Integral tiling flange (3T) acts as a moisture barrier
- 6-1/2 Inch wainscot
- Ergonomic backrest for bathing comfort
- Integral 18-3/4 in. skirt
- Slip-resistant textured floor for safety
- Center rear drain
- AcrylX™ applied acrylic surface
- East Zone only

GARDENIA I - PRICING CATEGORY : EH

SKU	System	Color	Configuration	Dimensions & Weight	MSRP
2354410-AL	Soaker - No System	Almond	Back Center Drain	54 1/4" x 41" x 23 1/8" / 98 lb 1378mm x 1041mm x 587mm / 44.44 kg	$ 1178
2354410-BI		Biscuit			$ 1178
2354410-BK		Black			$ 1498
2354410-BO		Bone			$ 1178
2354410-LN		Linen			$ 1178
2354410-ME		Mexican Sand			$ 1498
2354410-SD		Sandbar			$ 1498
2354410-ST		Sterling Silver			$ 1498
2354410-WH		White			$ 1143
2354411-BI	Whirlpool Massage	Biscuit		54 1/4" x 41" x 23 1/8" / 148 lb 1378mm x 1041mm x 587mm / 44.44 kg	$ 3053
2354411-LN		Linen			$ 3053
2354411-WH		White			$ 3018

OPTIONS

SKU	Description	MSRP
DDWO-PC	Designer drain waste & overflow kit Available finishes: White **(WH)**, Bone **(BO)**, Polished Chrome **(PC)**, Polished Brass**(PB)**, Brushed Nickel**(BN)**,	$ 288
DDWO-PB	Designer drain waste & overflow kit Available finishes: White **(WH)**, Bone **(BO)**, Polished Chrome **(PC)**, Polished Brass**(PB)**, Brushed Nickel**(BN)**,	$ 288
DDWO-BO	Designer drain waste & overflow kit Available finishes: White **(WH)**, Bone **(BO)**, Polished Chrome **(PC)**, Polished Brass**(PB)**, Brushed Nickel**(BN)**,	$ 288

OPTIONS

SKU	Description	MSRP
DDWO-WH	Designer drain waste & overflow kit Available finishes: White **(WH)**, Bone **(BO)**, Polished Chrome **(PC)**, Polished Brass**(PB)**, Brushed Nickel**(BN)**,	$ 288
DDWO-BN		$ 288
35RKBO	Finish repair kit - Case of 12 Available in White **(WH)**, or Bone **(BO)**,	$ 303
35RKWH		$ 303
CPOPBK1	Removable soft bath pillow Available colors: Black **(BK)**, White **(WH)**,	$ 115
CPOPWH1		$ 115
PLL2	Pump location is applicable to whirlpools and blower location for air system No charge option Refer to technical drawing for applicable choices	$ 0
PLL3		$ 0
PLL4		$ 0

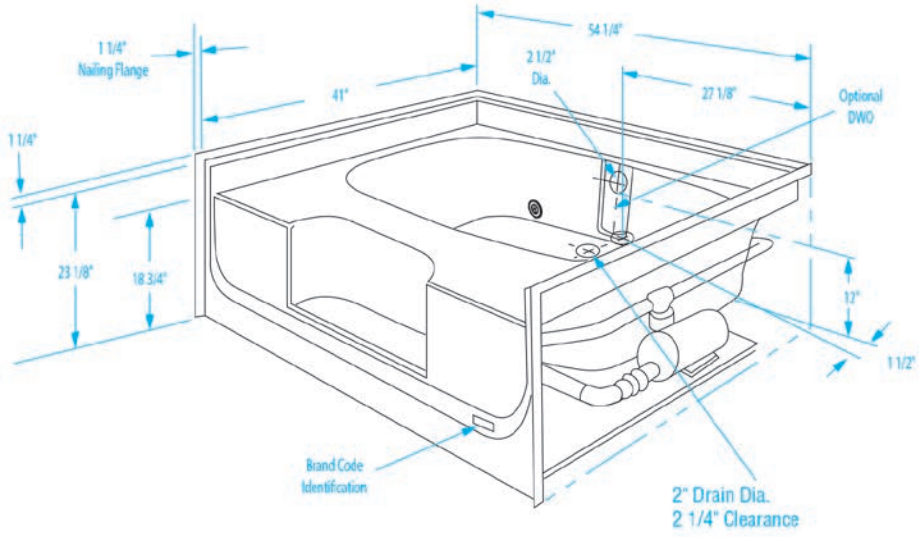
1 1/4"
Nailing Flange
41"
54 1/4"
2 1/2"
Dia.
27 1/8"
Optional
DWO
1 1/4"
23 1/8"
18 3/4"
12"
1 1/2"
Brand Code
Identification
2" Drain Dia.
2 1/4" Clearance

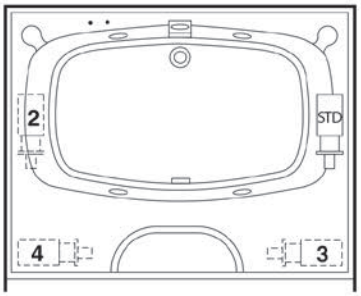
2
STD
4
3

Gardenia III





Material : AcrylX™

Min: 50 Gal
Max: 67 Gal

Features

- Garden tub
- Integral tiling flange (3T) acts as a moisture barrier
- 6-1/4 Inch wainscot
- Ergonomic backrest for bathing comfort
- Integral 21-1/2 in. skirt
- Slip-resistant textured floor for safety
- Center rear drain
- AcrylX™ applied acrylic surface

GARDENIA III - PRICING CATEGORY : EH

SKU	System	Color	Configuration	Dimensions & Weight	MSRP
1160410-AL	Soaker - No System	Almond	Back Center Drain	60” x 48” x 27 3/4” / 130 lb 1524mm x 1219mm x 705mm / 58.96 kg	$ 1244
1160410-BI		Biscuit			$ 1244
1160410-BK		Black			$ 1564
1160410-BO		Bone			$ 1244
1160410-LN		Linen			$ 1244
1160410-ME		Mexican Sand			$ 1564
1160410-SD		Sandbar			$ 1564
1160410-ST		Sterling Silver			$ 1564
1160410-WH		White			$ 1209
1160411-BI	Whirlpool Massage	Biscuit		60” x 48” x 27 3/4” / 180 lb 1524mm x 1219mm x 705mm / 58.96 kg	$ 3123
1160411-LN		Linen			$ 3123
1160411-WH		White			$ 3088

OPTIONS

SKU	Description	MSRP
DDWO-PC	Designer drain waste & overflow kit Available finishes: White **(WH)**, Bone **(BO)**, Polished Chrome **(PC)**, Polished Brass**(PB)**, Brushed Nickel**(BN)**,	$ 288
DDWO-PB	Designer drain waste & overflow kit Available finishes: White **(WH)**, Bone **(BO)**, Polished Chrome **(PC)**, Polished Brass**(PB)**, Brushed Nickel**(BN)**,	$ 288
DDWO-BO	Designer drain waste & overflow kit Available finishes: White **(WH)**, Bone **(BO)**, Polished Chrome **(PC)**, Polished Brass**(PB)**, Brushed Nickel**(BN)**,	$ 288

OPTIONS

SKU	Description	MSRP
DDWO-WH	Designer drain waste & overflow kit Available finishes: White **(WH)**, Bone **(BO)**, Polished Chrome **(PC)**, Polished Brass**(PB)**, Brushed Nickel**(BN)**,	$ 288
DDWO-BN		$ 288
35RKBO	Finish repair kit - Case of 12 Available in White **(WH)**, or Bone **(BO)**,	$ 303
35RKWH		$ 303
CPOPBK1	Removable soft bath pillow Available colors: Black **(BK)**, White **(WH)**,	$ 115
CPOPWH1		$ 115
PLL2	Pump location is applicable to whirlpools and blower location for air system No charge option Refer to technical drawing for applicable choices	$ 0
PLL3		$ 0
PLL4		$ 0

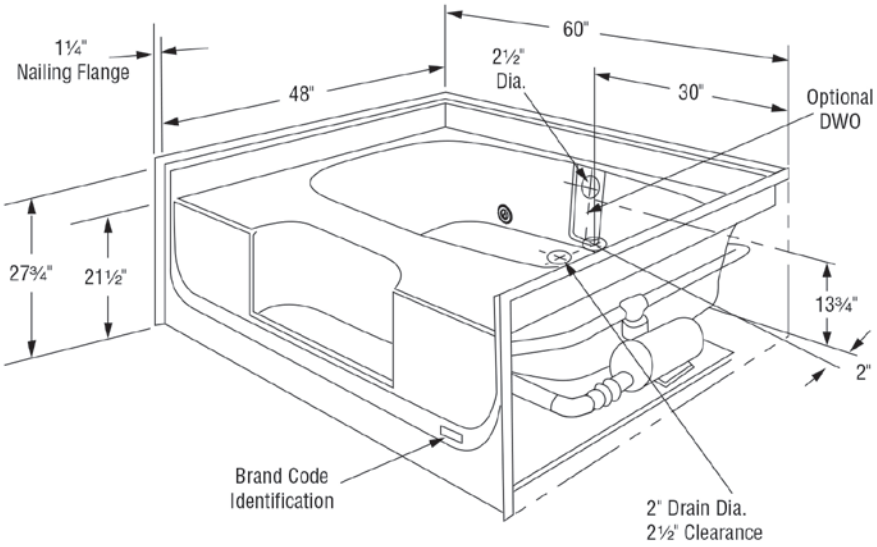
1¼"
Nailing Flange
48"
60"
2½"
Dia.
30"
Optional
DWO
27¾"
21½"
13¾"
2"
Brand Code
Identification
2" Drain Dia.
2½" Clearance

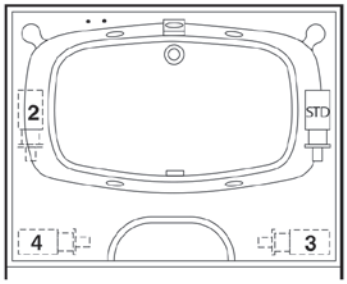
2
STD
4
3

Jasmine I



Material : AcrylX™

Min: 47 Gal
Max: 66 Gal

Features

- Island bath
- Integral arm rest
- Ergonomic backrest for bathing comfort
- Slip-resistant textured floor for safety
- Universal drain
- AcrylX™ applied acrylic surface
- Whirlpool Features:
- Whirlpool pump
- 4 directional hydrotherapy jets
- 1 Air control
- Pneumatic on/off control
- Color matched trim
- Advanced safety suction system

JASMINE I - PRICING CATEGORY : EH

SKU	System	Color	Configuration	Dimensions & Weight	MSRP
1760420- BO	Soaker - No System	Bone	Universal	60” x 36 1/8” x 21” / 68 lb 1524mm x 918mm x 533mm / 30.84 kg	$ 895
1760420-AL		Almond			$ 895
1760420-BI		Biscuit			$ 895
1760420-BK		Black			$ 1215
1760420-LN		Linen			$ 895
1760420-ME		Mexican Sand			$ 1215
1760420-SD		Sandbar			$ 1215
1760420-ST		Sterling Silver			$ 1215
1760420-WH		White			$ 860
1760421-BI	Whirlpool Massage	Biscuit		60” x 36 1/8” x 21” / 118 lb 1524mm x 918mm x 533mm / 30.84 kg	$ 2471
1760421-LN		Linen			$ 2471
1760421-WH		White			$ 2436

OPTIONS

SKU	Description	MSRP
DDWO-PC	Designer drain waste & overflow kit Available finishes: White **(WH)**, Bone **(BO)**, Polished Chrome **(PC)**, Polished Brass**(PB)**, Brushed Nickel**(BN)**,	$ 288
DDWO-PB	Designer drain waste & overflow kit Available finishes: White **(WH)**, Bone **(BO)**, Polished Chrome **(PC)**, Polished Brass**(PB)**, Brushed Nickel**(BN)**,	$ 288

OPTIONS

SKU	Description	MSRP
DDWO-BO	Designer drain waste & overflow kit Available finishes: White **(WH)**, Bone **(BO)**, Polished Chrome **(PC)**, Polished Brass**(PB)**, Brushed Nickel**(BN)**,	$ 288
DDWO-WH		$ 288
DDWO-BN		$ 288
35RKBO	Finish repair kit - Case of 12 Available in White **(WH)**, or Bone **(BO)**,	$ 303
35RKWH		$ 303
CPOPBK1	Removable soft bath pillow Available colors: Black **(BK)**, White **(WH)**,	$ 115
CPOPWH1		$ 115

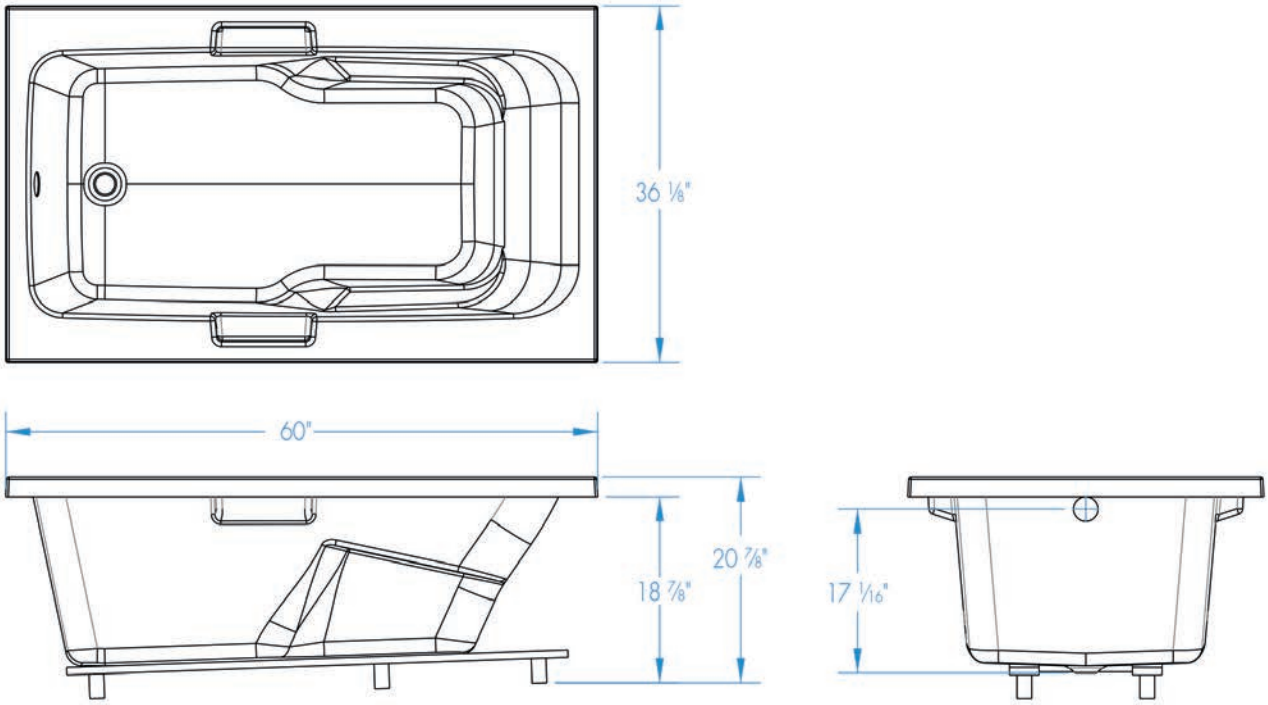
36 1/8"
60"
18 7/8"
20 7/8"
17 1/16"

Jasmine II





Material : AcrylX™

Min: 60 Gal
Max: 80 Gal

Features

- Island bath
- Integral arm rest
- Ergonomic backrest for bathing comfort
- Molded toiletry shelves
- Slip-resistant textured floor for safety
- Universal drain
- AcrylX™ applied acrylic surface
- Whirlpool Features:
- Whirlpool pump
- 4 directional hydrotherapy jets
- 1 Air control
- Pneumatic on/off control
- Color matched trim
- Advanced safety suction system

JASMINE II - PRICING CATEGORY : EH

SKU	System	Color	Configuration	Dimensions & Weight	MSRP
1572420-AL	Soaker - No System	Almond	Universal	72” x 36 1/8” x 21” / 68 lb 1829mm x 918mm x 533mm / 30.84 kg	$ 1004
1572420-BI		Biscuit			$ 1004
1572420-BK		Black			$ 1324
1572420-LN		Linen			$ 1004
1572420-ME		Mexican Sand			$ 1324
1572420-SD		Sandbar			$ 1324
1572420-ST		Sterling Silver			$ 1324
1572420-WH		White			$ 969
1572421-BI	Whirlpool Massage	Biscuit		72” x 36 1/8” x 21” / 118 lb 1829mm x 918mm x 533mm / 30.84 kg	$ 2560
1572421-LN		Linen			$ 2560
1572421-WH		White			$ 2525
157420-BO	Soaker - No System	Bone		72” x 36 1/8” x 21” / 68 lb 1829mm x 918mm x 533mm / 30.84 kg	$ 1004

OPTIONS

SKU	Description	MSRP
DDWO-PC	Designer drain waste & overflow kit Available finishes: White **(WH)**, Bone **(BO)**, Polished Chrome **(PC)**, Polished Brass**(PB)**, Brushed Nickel**(BN)**,	$ 288

OPTIONS

SKU	Description	MSRP
DDWO-PB	Designer drain waste & overflow kit Available finishes: White **(WH)**, Bone **(BO)**, Polished Chrome **(PC)**, Polished Brass**(PB)**, Brushed Nickel**(BN)**,	$ 288
DDWO-BO	Designer drain waste & overflow kit Available finishes: White **(WH)**, Bone **(BO)**, Polished Chrome **(PC)**, Polished Brass**(PB)**, Brushed Nickel**(BN)**,	$ 288
DDWO-WH		$ 288
DDWO-BN		$ 288
35RKBO	Finish repair kit - Case of 12 Available in White **(WH)**, or Bone **(BO)**,	$ 303
35RKWH		$ 303
CPOPBK1	Removable soft bath pillow Available colors: Black **(BK)**, White **(WH)**,	$ 115
CPOPWH1		$ 115
972035SK	Color matched 72 Inch skirt Whirlpool option only	$ 374

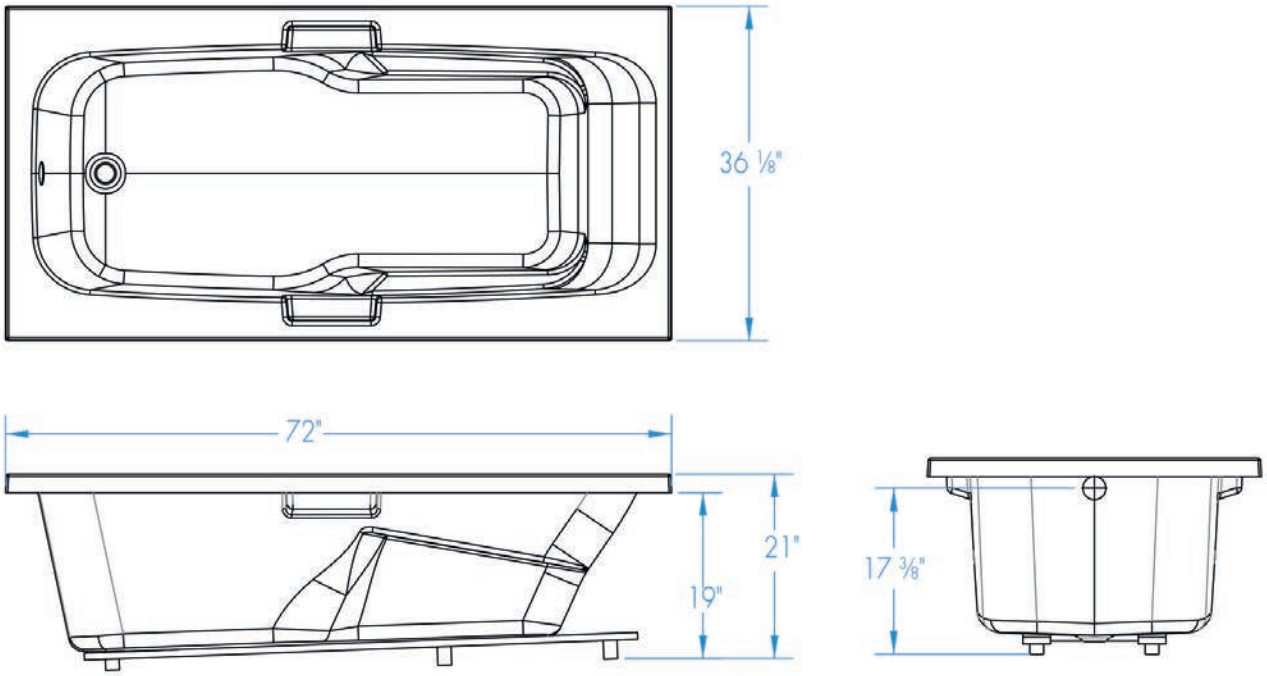
36 1/8"
72"
21"
19"
17 3/8"

3636ANEO



Material : Premium Cast Acrylic

Features

- Shower base
- Slip-resistant, textured floor for safety
- No bedding material required
- Reduced 4 Inch threshold
- Neo-angle corner design
- Integral tiling flange (2T) works as moisture barrier
- Center drain
- Premium, durable cast acrylic finish

3636ANEO - PRICING CATEGORY : EP

SKU	Color	Configuration	Dimensions & Weight	MSRP
3636ANEO-BI	Biscuit	Center Drain / Corner Left or Right	36” x 36” x 5 1/4” / 25 lb 914mm x 914mm x 133mm / 11.34 kg	$ 759
3636ANEO-WH	White			$ 724

OPTIONS

SKU	Description	MSRP
4200BRASDRSF	2” Brass Surefit Joint Shower Drain Brass drain material Snap in strainer-stainless steel No-caulk connection.	$ 48

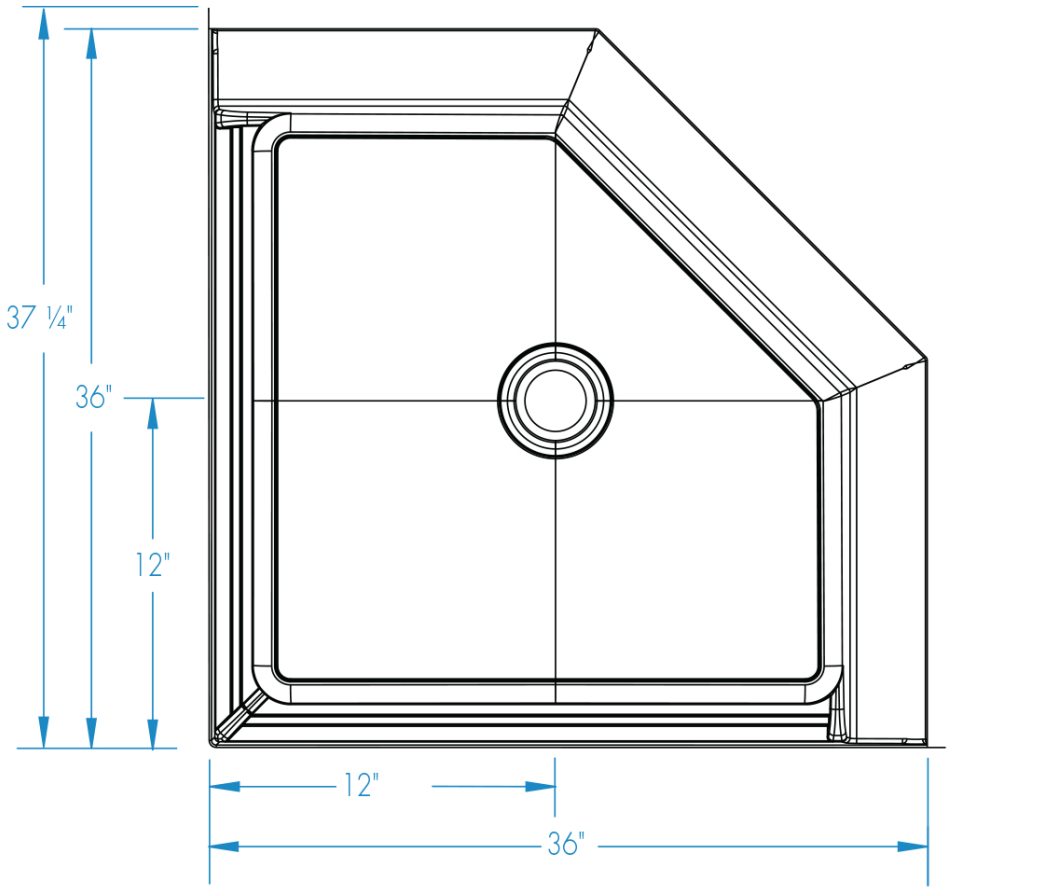
37 ¼"
36"
12"
12"
36"

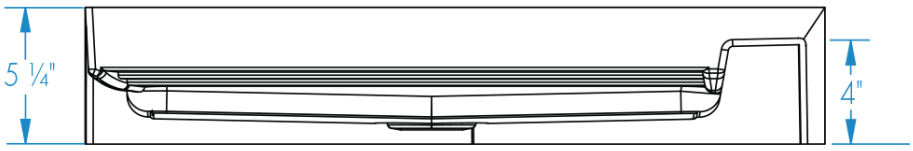
5 ¼"
4"

3636APANB



Material : Premium Cast Acrylic

Features

- Shower Base
- Slip-resistant, textured floor for safety
- No bedding material required for installation
- Extended tiling flange (3T) works as moisture barrier
- Step guides for various wall finishes
- Enhanced front profile
- Center drain
- Premium, durable cast acrylic finish

3636APANB - PRICING CATEGORY : EP

SKU	Color	Configuration	Dimensions & Weight	MSRP
3636APANB-BI	Biscuit	Center Drain / Alcove	36” x 36” x 7 1/4” / 37 lb 914mm x 914mm x 184mm / 16.78 kg	$ 714
3636APANB-WH	White			$ 679

OPTIONS

SKU	Description	MSRP
4200BRASDRSF	2” Brass Surefit Joint Shower Drain Brass drain material Snap in strainer-stainless steel No-caulk connection.	$ 48

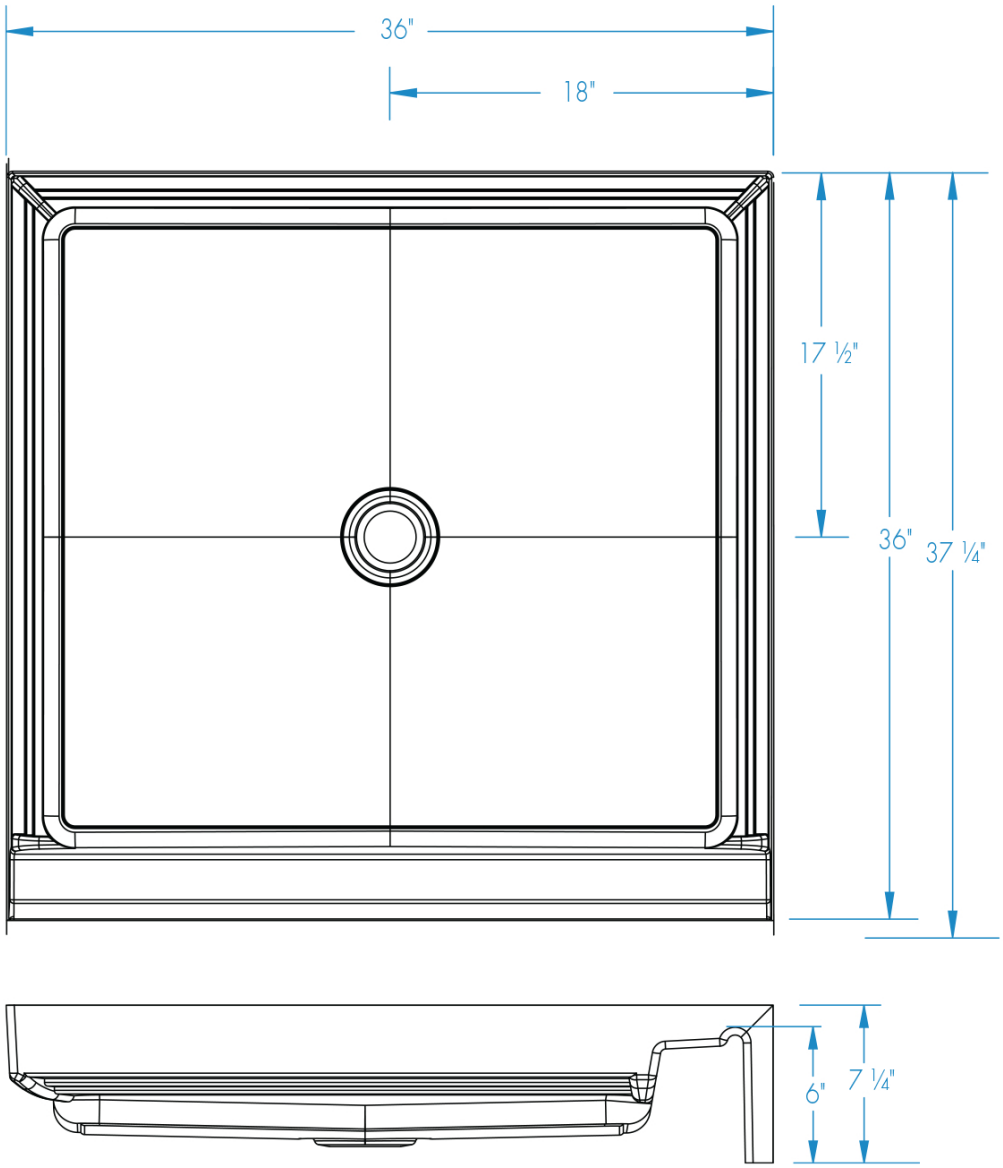
36"
18"
17 ½"
36"
37 ¼"
6"
7 ¼"

3642APAN



Material : Premium Cast Acrylic

Features

- Shower base
- Slip-resistant, textured floor for safety
- No bedding material required for installation
- Integral nailing flange (3T) works as a moisture barrier
- Center drain
- Premium, durable cast acylic finish

3642APAN - PRICING CATEGORY : EP

SKU	Color	Configuration	Dimensions & Weight	MSRP
3642APAN-BI	Biscuit	Center Drain / Alcove	36” x 42” x 7 1/4” / 27 lb 914mm x 1067mm x 184mm / 12.24 kg	$ 714
3642APAN-WH	White			$ 679

OPTIONS

SKU	Description	MSRP
4200BRASDRSF	2” Brass Surefit Joint Shower Drain Brass drain material Snap in strainer-stainless steel No-caulk connection.	$ 48

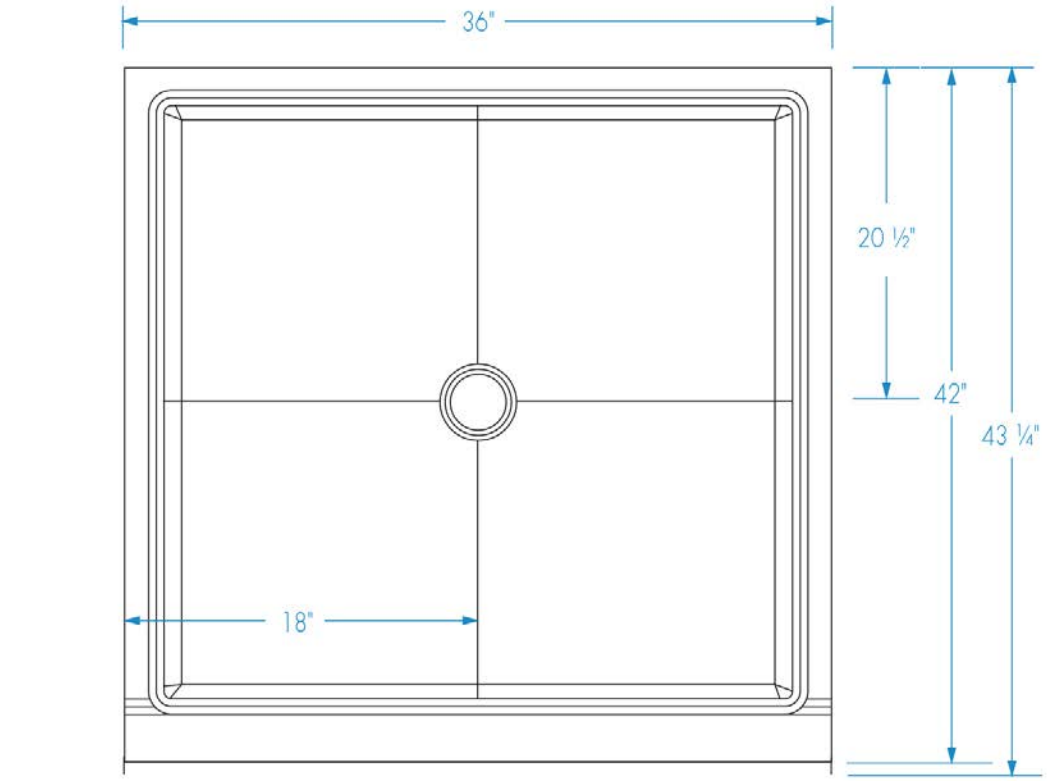
36"
20 ½"
42"
43 ¼"
18"

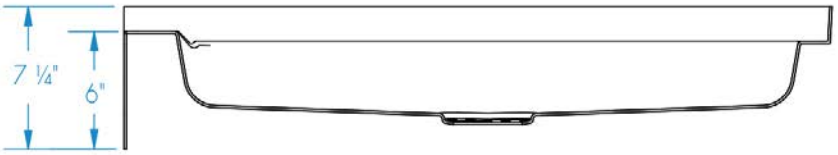
7 ¼"
6"

3838ANEOB





Material : Premium Cast Acrylic

Features

- Shower base
- Slip-resistant, textured floor for safety
- No bedding material required for installation
- Neo-angle corner design
- Extended tiling flange (2T) works as a moisture barrier
- Enhanced front profile
- Step guides for various wall finishes
- Center drain
- Premium, durable cast acrylic finish

3838ANEOB - PRICING CATEGORY : EP

SKU	Color	Configuration	Dimensions & Weight	MSRP
3838ANEOB-BI	Biscuit	Center Drain / Corner Left or Right	38” x 38” x 7 1/4” / 27 lb 965mm x 965mm x 184mm / 12.24 kg	$ 759
3838ANEOB-WH	White			$ 724

OPTIONS

SKU	Description	MSRP
4200BRASDRSF	2” Brass Surefit Joint Shower Drain Brass drain material Snap in strainer-stainless steel No-caulk connection.	$ 48

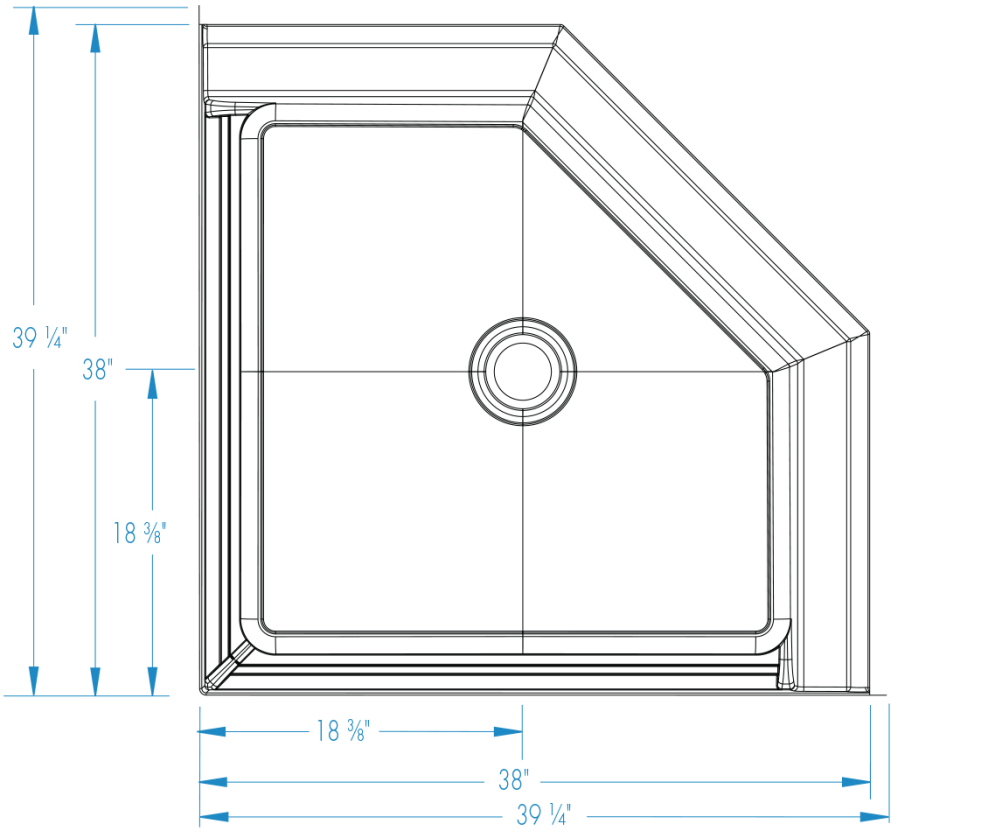
39 ¼"
38"
18 ⅜"
18 ⅜"
38"
39 ¼"

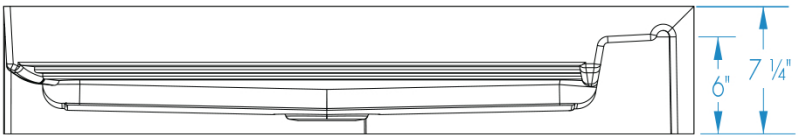
6"
7 ¼"

3838NEO



Material : AcrylX™

Features

- Shower base
- Slip-resistant, textured floor for safety
- No bedding material required for installation
- Neo-angle corner design
- Integral nailing flange (2T) works as a moisture barrer
- Center drain
- AcrlyX™ applied acrylic surface

3838NEO - PRICING CATEGORY : EP

SKU	Color	Configuration	Dimensions & Weight	MSRP
3838NEO-AL	Almond	Center Drain / Corner Left or Right	38” x 38” x 7 1/4” / 34 lb 965mm x 965mm x 184mm / 15.42 kg	$ 572
3838NEO-BI	Biscuit			$ 572
3838NEO-BK	Black			$ 892
3838NEO-BO	Bone			$ 572
3838NEO-LN	Linen			$ 572
3838NEO-ME	Mexican Sand			$ 892
3838NEO-SD	Sandbar			$ 892
3838NEO-ST	Sterling Silver			$ 892
3838NEO-WH	White			$ 537

OPTIONS

SKU	Description	MSRP
4200BRASDRSF	2” Brass Surefit Joint Shower Drain Brass drain material Snap in strainer-stainless steel No-caulk connection.	$ 48

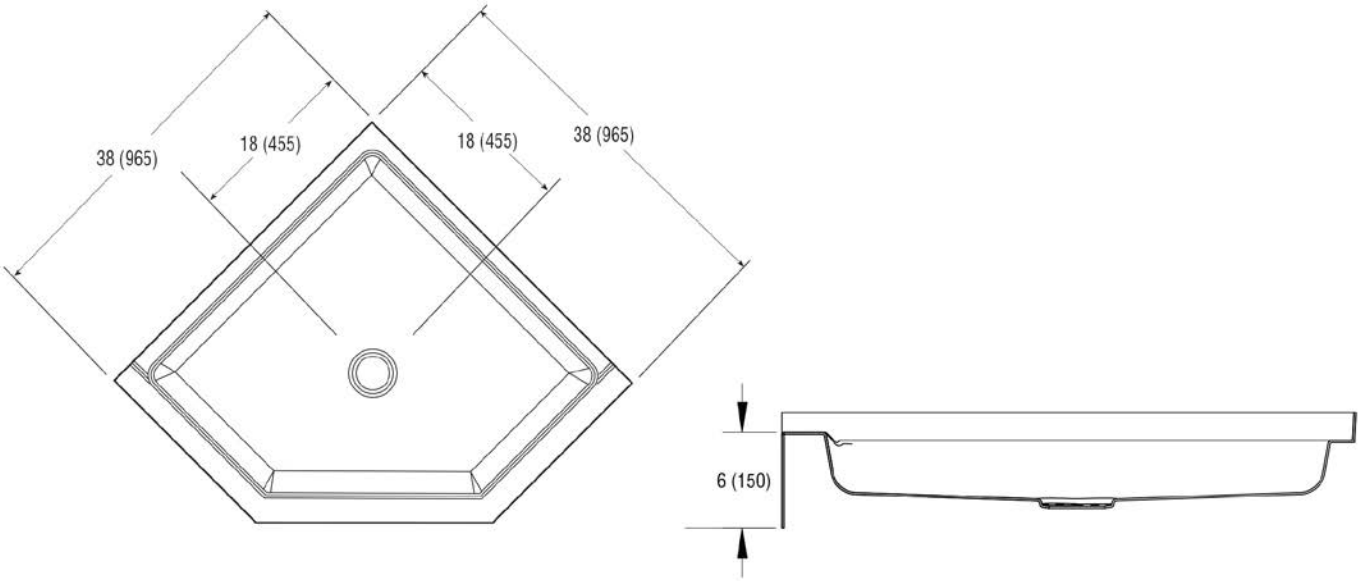
38 (965)
18 (455)
18 (455)
38 (965)
6 (150)

4236APANB



Material : Premium Cast Acrylic

Features

- Shower base
- Slip-resistant, textured floor for safety
- No bedding material required for installation
- Extended tiling flange (3T) acts as a moisture barrier
- Enhanced front profile
- Step guide for various wall finishes
- Center drain
- Premium, durable cast acrylic finish

4236APANB - PRICING CATEGORY : EP

SKU	Color	Configuration	Dimensions & Weight	MSRP
4236APANB-BI	Biscuit	Center Drain / Alcove	42” x 36” x 7 1/4” / 27 lb 1067mm x 914mm x 184mm / 12.24 kg	$ 819
4236APANB-WH	White			$ 784

OPTIONS

SKU	Description	MSRP
4200BRASDRSF	2” Brass Surefit Joint Shower Drain Brass drain material Snap in strainer-stainless steel No-caulk connection.	$ 48

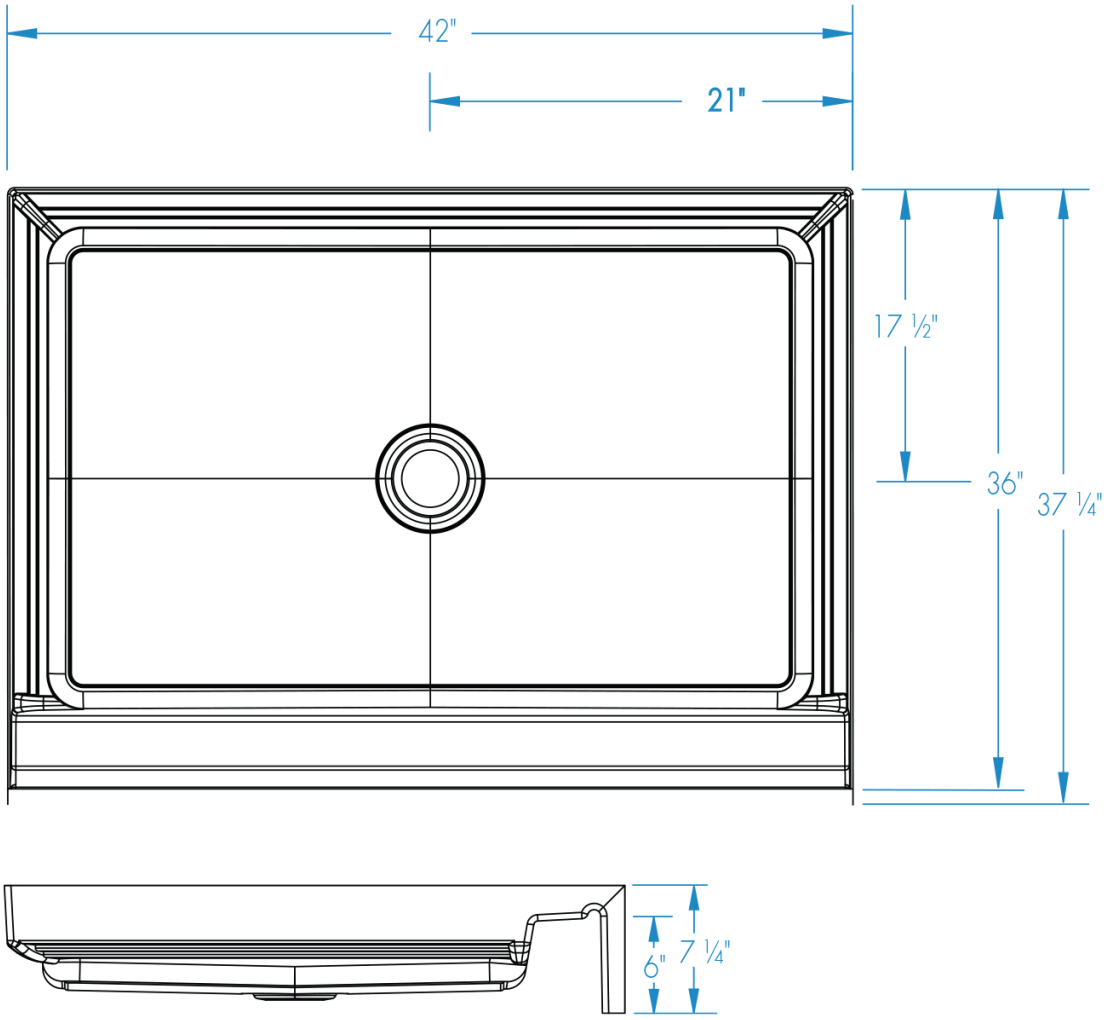
42"
21"
17 ½"
36"
37 ¼"
6"
7 ¼"

4242APANB





Material : Premium Cast Acrylic

Features

- Shower base
- Slip-resistant, textured floor for safety
- No bedding material required for installation
- Extended tiling flange (3T) acts as a moisture barrier
- Enhanced front profile
- Step guide for various wall finishes
- Center drain
- Premium, durable cast acrylic finish

4242APANB - PRICING CATEGORY : EP

SKU	Color	Configuration	Dimensions & Weight	MSRP
4242APANB-BI	Biscuit	Center Drain / Alcove	42” x 42” x 7 1/4” / 31 lb 1067mm x 1067mm x 184mm / 14.06 kg	$ 836
4242APANB-WH	White			$ 801

OPTIONS

SKU	Description	MSRP
4200BRASDRSF	2” Brass Surefit Joint Shower Drain Brass drain material Snap in strainer-stainless steel No-caulk connection.	$ 48

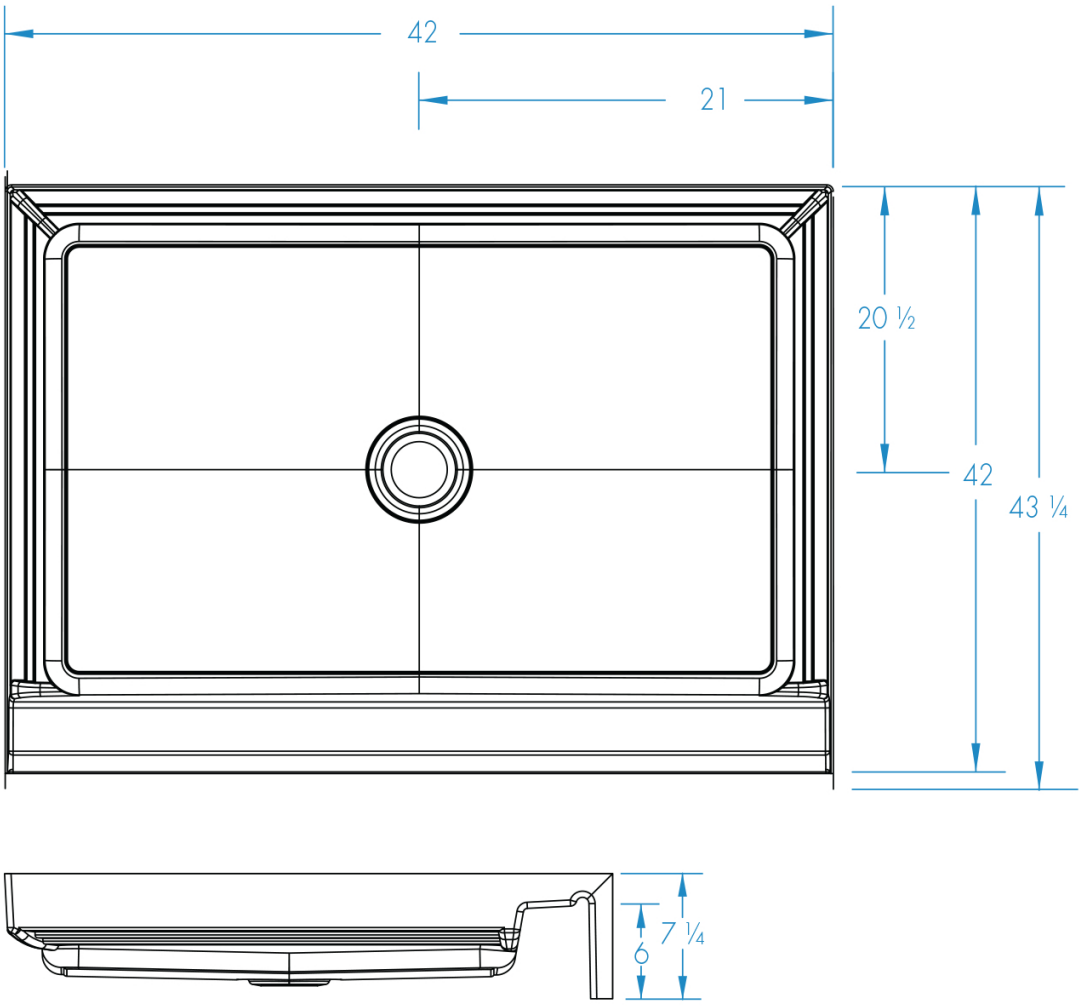
42
21
20 ½
42
43 ¼
6
7 ¼

4834APANB





Material : Premium Cast Acrylic

Features

- Shower base
- Slip-resistant, textured floor for safety
- No bedding material required for installation
- Extended tiling flange (3T) acts as a moisture barrier
- Enhanced front profile
- Step guide for various wall finishes
- Center drain
- Premium, durable cast acrylic finish

4834APANB - PRICING CATEGORY : EP

SKU	Color	Configuration	Dimensions & Weight	MSRP
4834APANB-BI	Biscuit	Center Drain / Alcove	48” x 34” x 7 1/4” / 39 lb 1219mm x 864mm x 184mm / 17.69 kg	$ 858
4834APANB-WH	White			$ 823

OPTIONS

SKU	Description	MSRP
4200BRASDRSF	2” Brass Surefit Joint Shower Drain Brass drain material Snap in strainer-stainless steel No-caulk connection.	$ 48

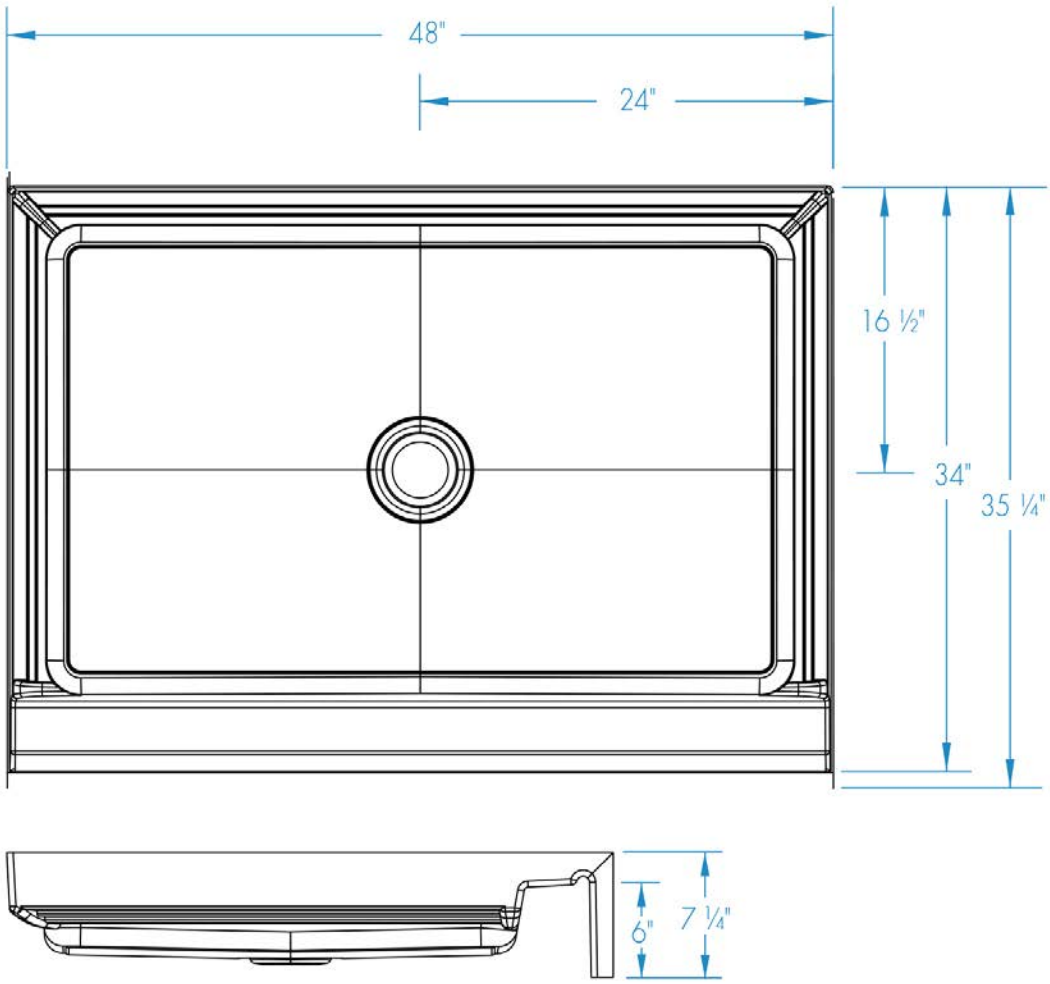
48"
24"
16 ½"
34"
35 ¼"
6"
7 ¼"

6030ABL/R





Material : Premium Cast Acrylic

Features

- Shower base
- Slip-resistant, textured floor for safety
- No bedding material required for installation
- Reduced 4 Inch threshold
- Left or Right hand drain
- Ideal size for tub replacement
- Premium, durable cast acrylic finish

6030ABL/R - PRICING CATEGORY : EP

SKU	Color	Configuration	Dimensions & Weight	MSRP
6030ABL-BI	Biscuit	Left-hand Drain / Alcove	60” x 30” x 5 1/4” / 60 lb 1524mm x 762mm x 133mm / 27.21 kg	$ 875
6030ABL-WH	White			$ 840
6030ABR-BI	Biscuit	Right-hand Drain / Alcove		$ 875
6030ABR-WH	White			$ 840

OPTIONS

SKU	Description	MSRP
4200BRASDRSF	2” Brass Surefit Joint Shower Drain Brass drain material Snap in strainer-stainless steel No-caulk connection.	$ 48

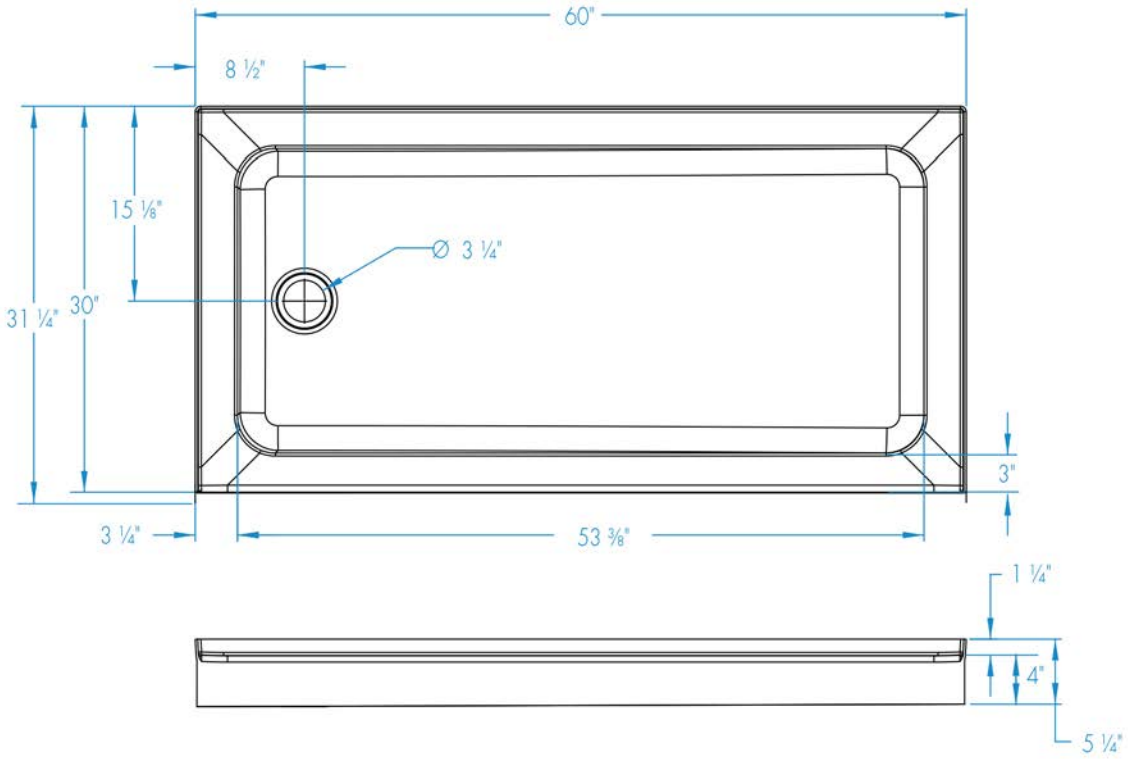
60"
8 ½"
15 ⅛"
Ø 3 ¼"
31 ¼"
30"
3"
3 ¼"
53 ⅜"
1 ¼"
4"
5 ¼"

6030SPAN



Material : AcrylX™

Features

- Shower base
- Integral corner seat (left or right hand) and foot rest
- 18 Inch seat height
- Slip-resistant, textured floor for safety
- No bedding material required for installation
- Left or right hand drain
- Low, 3 Inch threshold
- Extended tiling flange (3T) works as a moisture barrier
- AcrlyX™ applied acrylic surface

6030SPAN - PRICING CATEGORY : EP

SKU	Color	Configuration	Dimensions & Weight	MSRP
6030SPANL-AL	Almond	Left-hand Drain / Alcove	60” x 30” x 20 5/8” / 65 lb 1524mm x 762mm x 524mm / 29.48 kg	$ 807
6030SPANL-BI	Biscuit			$ 807
6030SPANL-BK	Black			$ 1127
6030SPANL-BO	Bone			$ 807
6030SPANL-LN	Linen			$ 807
6030SPANL-ME	Mexican Sand			$ 1127
6030SPANL-SD	Sandbar			$ 1127
6030SPANL-ST	Sterling Silver			$ 1127
6030SPANL-WH	White			$ 772
6030SPANR-AL	Almond	Right-hand Drain / Alcove		$ 807
6030SPANR-BI	Biscuit			$ 807
6030SPANR-BK	Black			$ 1127
6030SPANR-BO	Bone			$ 807
6030SPANR-LN	Linen			$ 807
6030SPANR-ME	Mexican Sand			$ 1127
6030SPANR-SD	Sandbar			$ 1127
6030SPANR-ST	Sterling Silver			$ 1127
6030SPANR-WH	White			$ 772

OPTIONS

SKU	Description	MSRP
4200BRASDRSF	2” Brass Surefit Joint Shower Drain Brass drain material Snap in strainer-stainless steel No-caulk connection.	$ 48

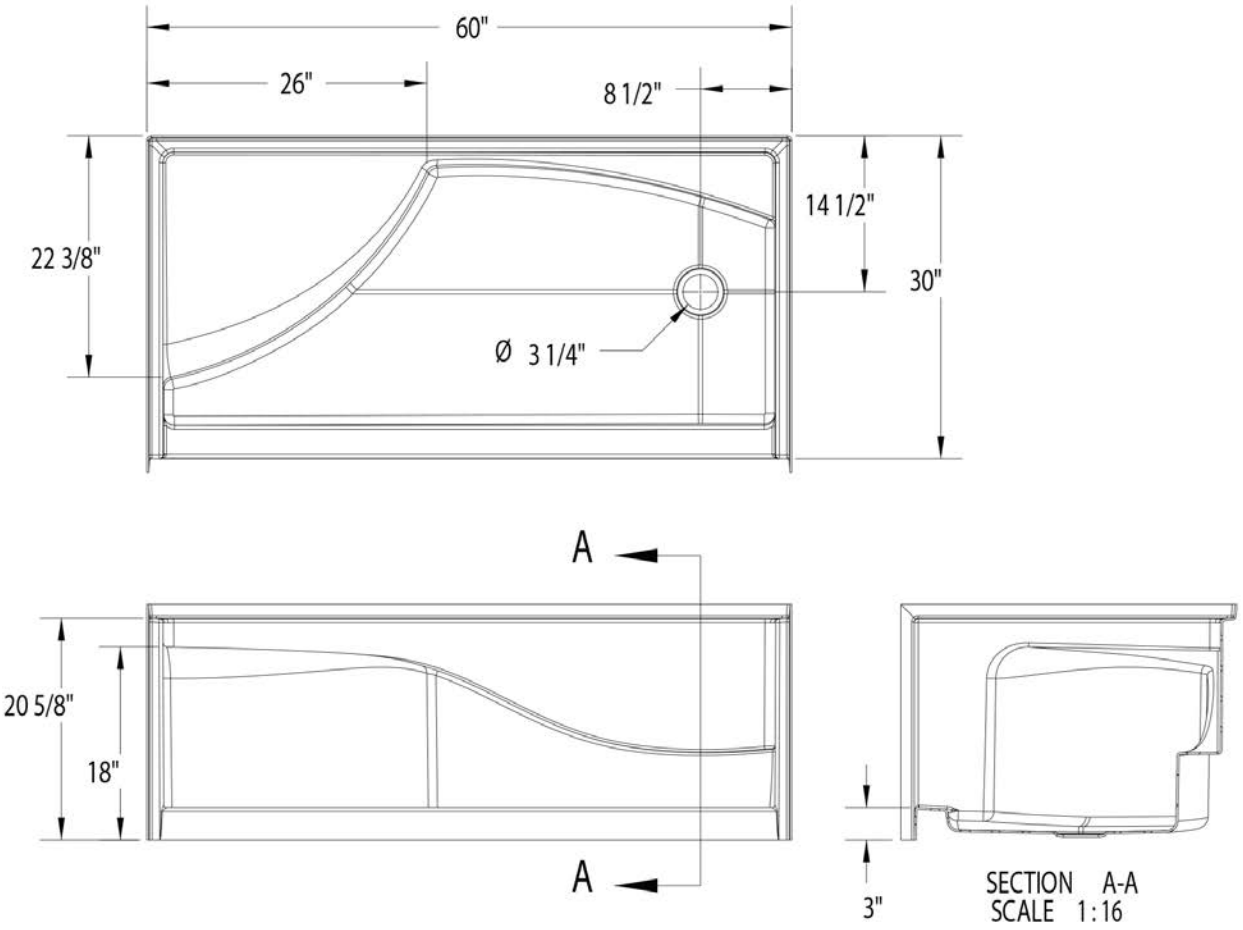
60"
26"
8 1/2"
22 3/8"
14 1/2"
30"
Ø 3 1/4"
A
20 5/8"
18"
A
3"
SECTION A-A
SCALE 1:16

6032ABL/R





Material : Premium Cast Acrylic

Features

- Shower base
- Slip-resistant, textured floor for safety
- No bedding material required for installation
- Reduced 4 Inch threshold
- Left or Right hand drain
- Ideal size for tub replacement
- Premium, durable cast acrylic finish

6032ABL/R - PRICING CATEGORY : EP

SKU	Color	Configuration	Dimensions & Weight	MSRP
6032ABL-BI	Biscuit	Left-hand Drain / Alcove	60” x 32” x 5 1/4” / 65 lb 1524mm x 813mm x 133mm / 29.48 kg	$ 885
6032ABL-WH	White			$ 850
6032ABR-BI	Biscuit	Right-hand Drain / Alcove		$ 885
6032ABR-WH	White			$ 850

OPTIONS

SKU	Description	MSRP
4200BRASDRSF	2” Brass Surefit Joint Shower Drain Brass drain material Snap in strainer-stainless steel No-caulk connection.	$ 48

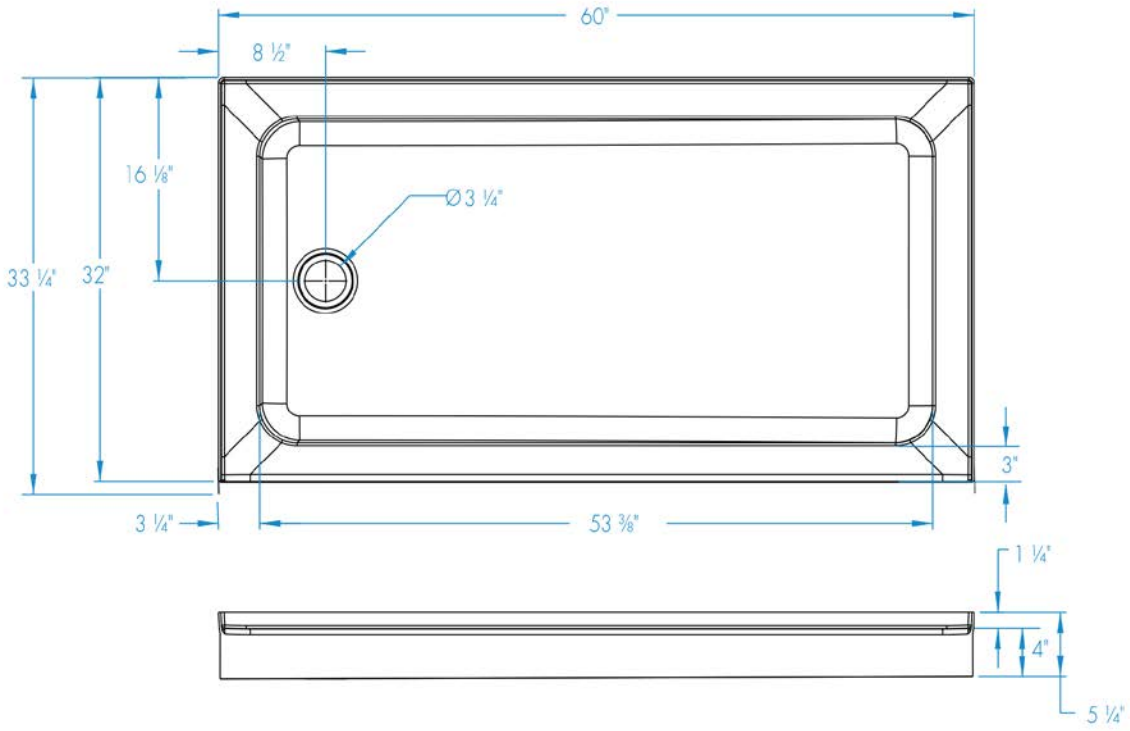
60"
8 ½"
16 ⅛"
Ø3 ¼"
33 ¼"
32"
3"
3 ¼"
53 ⅜"
1 ¼"
4"
5 ¼"

6032APANL/R





Material : Premium Cast Acrylic

Features

- Shower base
- Integral corner seat (left or right hand) and footrest
- 17-5/8 Inch seat height
- Slip-resistant, textured floor for safety
- No bedding materials required for installation
- Extended tiling flange (3T) works as a moisture barrier
- Enhanced front profile
- Step guides for various wall finishes
- Left or right hand drain
- Space saving design(Not listed by IAPMO of FHA
- Ideal size for tub-replacement
- Premium, durable cast acrylic finish

6032APANL/R - PRICING CATEGORY : EP

SKU	Color	Configuration	Dimensions & Weight	MSRP
6032APANL-BI	Biscuit	Left-hand Drain / Alcove	60” x 32” x 20 5/8” / 63 lb 1524mm x 813mm x 524mm / 28.57 kg	$ 1042
6032APANL-WH	White			$ 1007
6032APANR-BI	Biscuit	Right-hand Drain / Alcove		$ 1042
6032APANR-WH	White			$ 1007

OPTIONS

SKU	Description	MSRP
4200BRASDRSF	2” Brass Surefit Joint Shower Drain Brass drain material Snap in strainer-stainless steel No-caulk connection.	$ 48

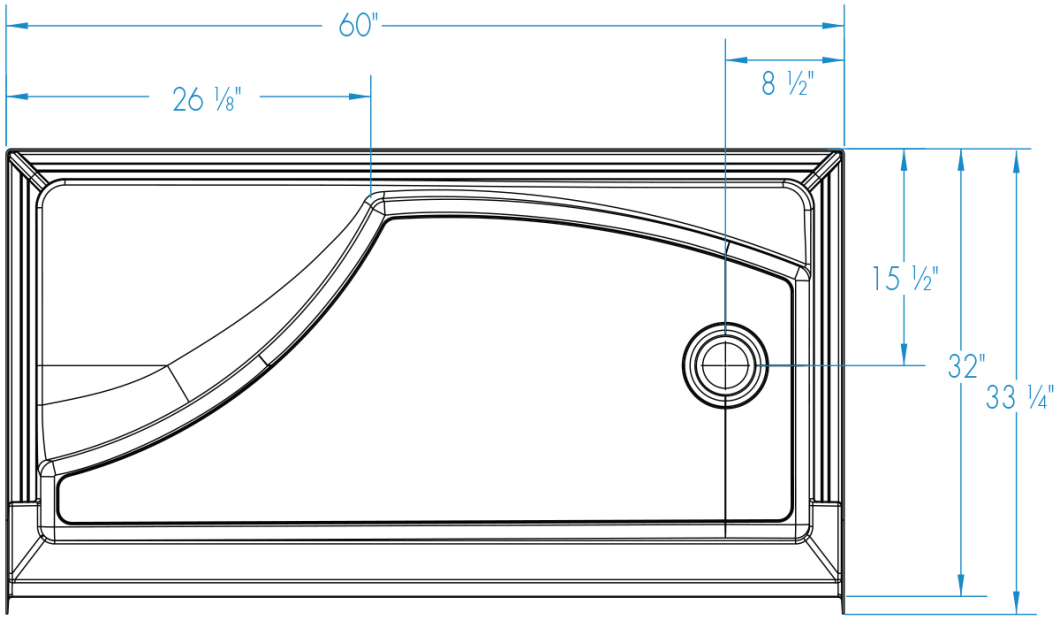

Seat Height: 17 5/8"

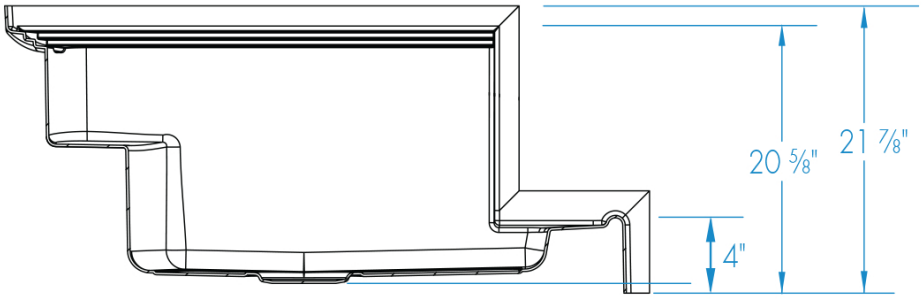

6034APAN





Material : Premium Cast Acrylic

Features

- Shower base
- Slip-resistant, textured floor for safety
- No bedding materials required for installation
- Integral tiling flange (3T) acts as a moisture barrier
- Center drain
- Premium, durable cast acrylic finish

6034APAN - PRICING CATEGORY : EP

SKU	Color	Configuration	Dimensions & Weight	MSRP
6034APAN-BI	Biscuit	Center Drain / Alcove	60” x 34” x 7 1/4” / 34 lb 1524mm x 864mm x 184mm / 15.42 kg	$ 900
6034APAN-WH	White			$ 865

OPTIONS

SKU	Description	MSRP
4200BRASDRSF	2” Brass Surefit Joint Shower Drain Brass drain material Snap in strainer-stainless steel No-caulk connection.	$ 48

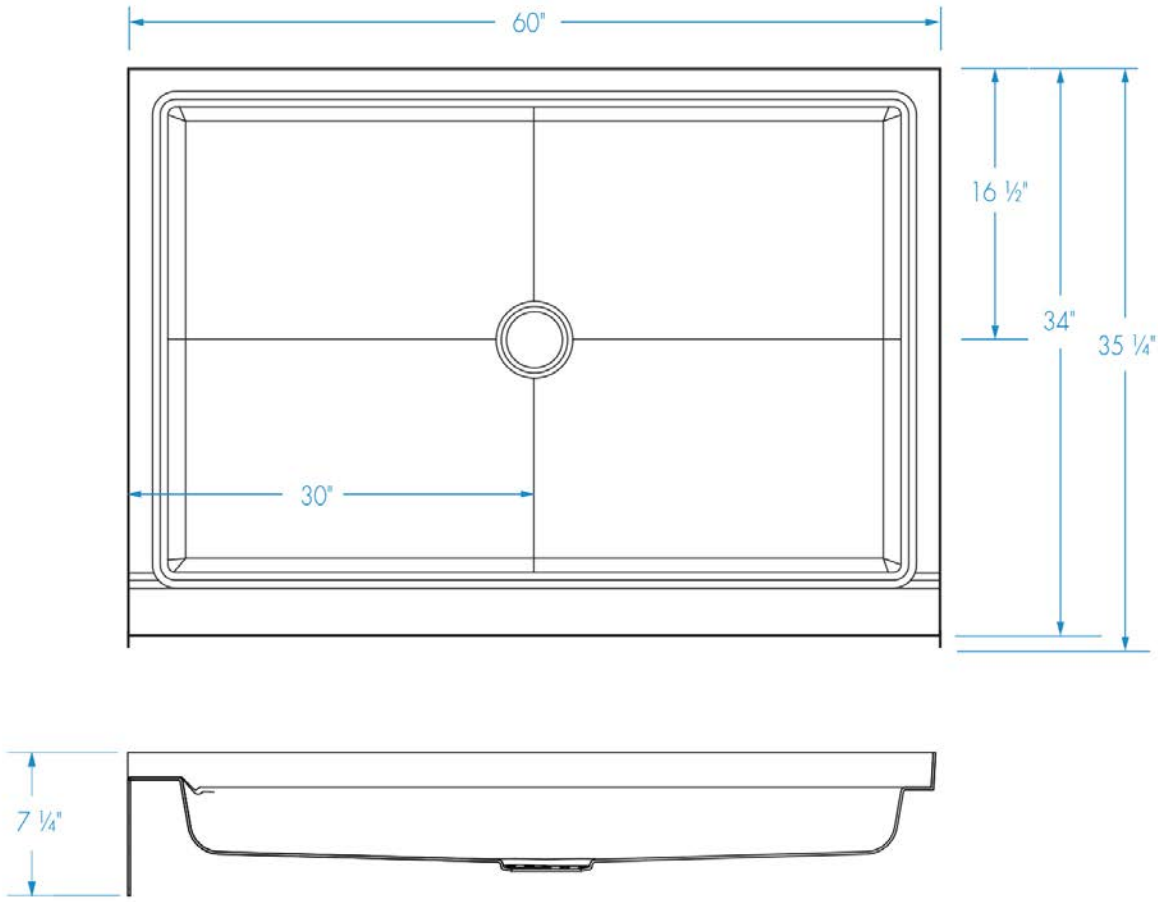
60"
16 ½"
34"
35 ¼"
30"
7 ¼"

6034APANBL/R





Shown with optional brass drain assembly

Material : Premium Cast Acrylic

Features

- Shower base
- Integral corner seat (left or right hand) and foot rest
- Seat height 20-1/4 Inch
- Slip-resistant, textured floor for safety
- No bedding material required for installation
- Extended tiling flange (3T) acts as a water barrier
- Enhanced front profile
- Step guides for various wall finishes
- Center drain
- Premium, durable cast acrylic finish

6034APANBL/R - PRICING CATEGORY : EP

SKU	Color	Configuration	Dimensions & Weight	MSRP
6034APANBL-BI	Biscuit	Left seat, center drain / Alcove	60” x 34” x 23” / 63 lb 1524mm x 864mm x 584mm / 28.57 kg	$ 983
6034APANBL-WH	White			$ 948
6034APANBR-BI	Biscuit	Right seat, center drain / Alcove		$ 983
6034APANBR-WH	White			$ 948

OPTIONS

SKU	Description	MSRP
4200BRASDRSF	2” Brass Surefit Joint Shower Drain Brass drain material Snap in strainer-stainless steel No-caulk connection.	$ 48

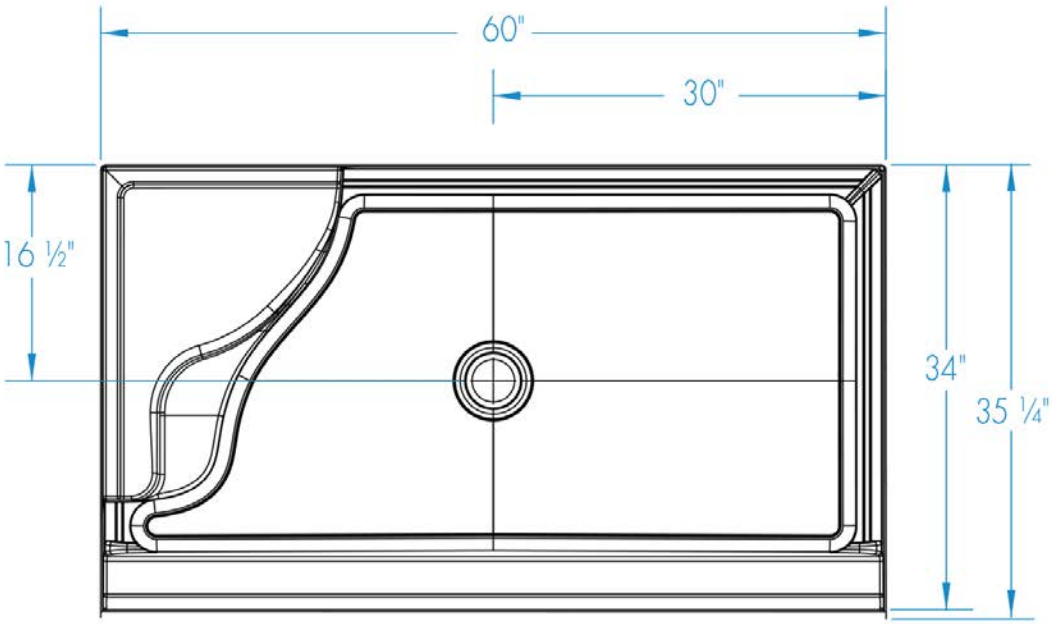
60"
30"
16 ½"
34"
35 ¼"

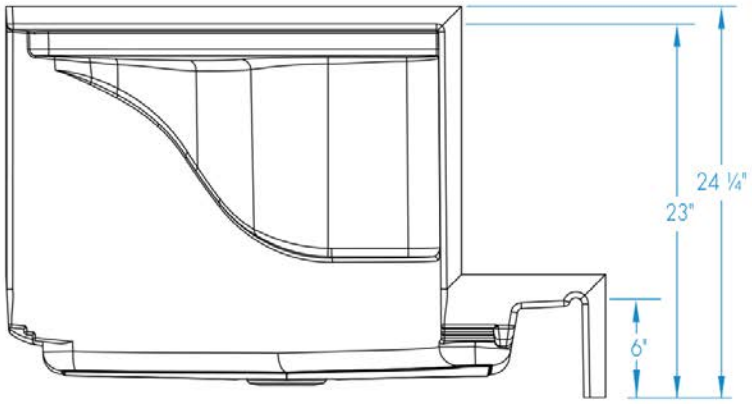
24 ¼"
23"
6"

7248MPAN





Material : Premium Cast Acrylic

Features

- Shower base
- Slip-resistant, textured floor for safety
- Extended tiling flange (3T) works as a moisture barrier
- Permimeter drainage system
- Threshold water barrier
- Enhanced front profile
- Patented design features: corner drainage channels, step-design finishing guides, extended nailing flange
- Center rear drain
- AcrlyX™ applied acrylic surface

7248MPAN - PRICING CATEGORY : EP

SKU	Color	Configuration	Dimensions & Weight	MSRP
7248MPAN-BI	Biscuit	Back Center Drain / Alcove	72” x 48” x 7 1/4” / 86 lb 1829mm x 1219mm x 184mm / 39.0 kg	$ 1476
7248MPAN-WH	White			$ 1441

OPTIONS

SKU	Description	MSRP
4200BRASDRSF	2” Brass Surefit Joint Shower Drain Brass drain material Snap in strainer-stainless steel No-caulk connection.	$ 48

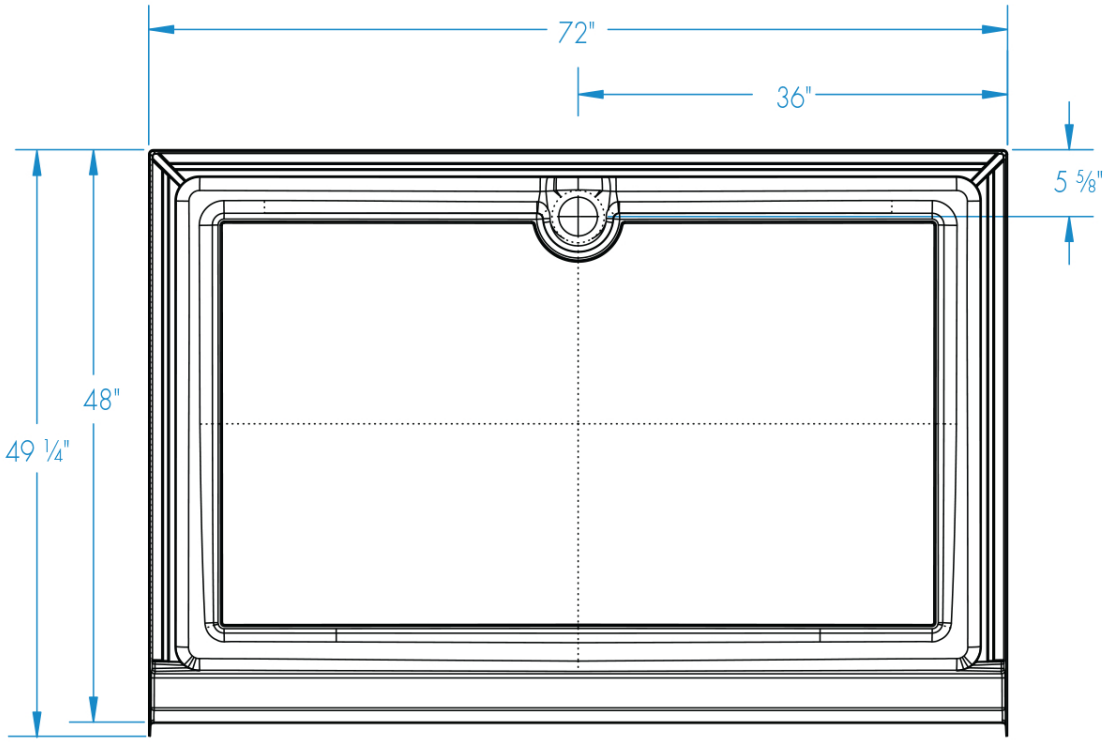
72"
36"
5 5/8"
48"
49 1/4"


7 1/4"
6"

7248PAN



Material : AcrylX™

Features

- Shower base
- Slip-resistant, textured floor for safety
- Pre-leveled legs, no mortar bed required
- Extended tiling flange (3T) works as a moisture barrier
- Center drain
- Available in the East zone only
- AcrlyX™ applied acrylic surface

7248PAN - PRICING CATEGORY : EP

SKU	Color	Configuration	Dimensions & Weight	MSRP
7248PAN-AL	Almond	Center Drain / Alcove	72” x 48” x 6” / 86 lb 1829mm x 1219mm x 152mm / 39.0 kg	$ 908
7248PAN-BI	Biscuit			$ 908
7248PAN-BK	Black			$ 1228
7248PAN-BO	Bone			$ 908
7248PAN-LN	Linen			$ 908
7248PAN-ME	Mexican Sand			$ 1228
7248PAN-SD	Sandbar			$ 1228
7248PAN-ST	Sterling Silver			$ 1228
7248PAN-WH	White			$ 873

OPTIONS

SKU	Description	MSRP
4200BRASDRSF	2” Brass Surefit Joint Shower Drain Brass drain material Snap in strainer-stainless steel No-caulk connection.	$ 48

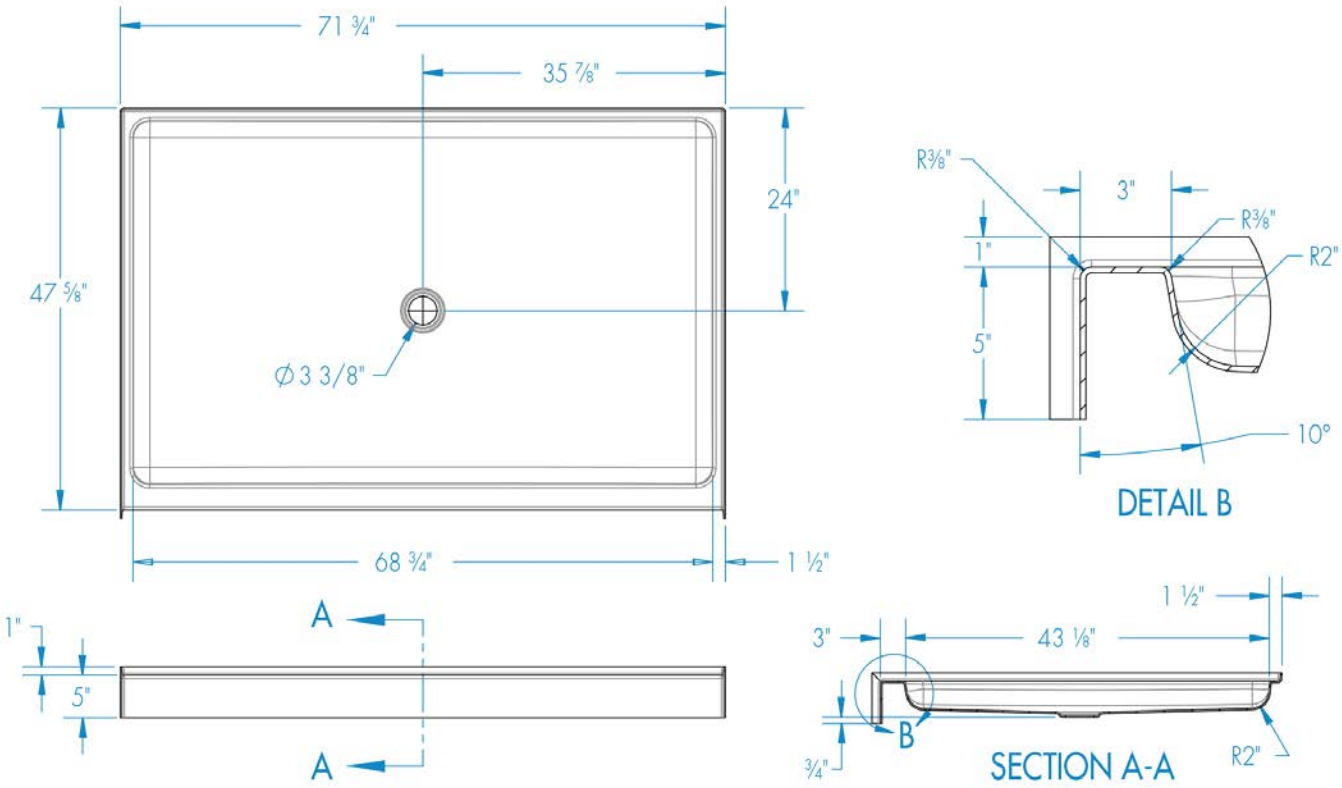
71 ¾"
35 7/8"
24"
47 5/8"
Ø3 3/8"
68 ¾"
1 ½"
A
A
1"
5"
R3/8"
3"
R3/8"
1"
R2"
5"
10°
DETAIL B
1 ½"
3"
43 1/8"
B
¾"
R2"
SECTION A-A

9648SPAN





Material : AcrylX™

Features

- Shower base
- Extra wide Integral seat
- Seat height measures 20-3/4 Inches
- Slip-resistant, textured floor for safety
- Center drain
- Extended tiling flange (4T) acts as a water barrier
- AcrlyX™ applied acrylic surface

9648SPAN - PRICING CATEGORY : EP

SKU	Color	Configuration	Dimensions & Weight	MSRP
9648SPAN-AL	Almond	Center Drain / Alcove	96” x 48” x 24” / 70 lb 2438mm x 1219mm x 610mm / 31.75 kg	$ 2287
9648SPAN-BI	Biscuit			$ 2287
9648SPAN-BK	Black			$ 2607
9648SPAN-BO	Bone			$ 2287
9648SPAN-LN	Linen			$ 2287
9648SPAN-ME	Mexican Sand			$ 2607
9648SPAN-SD	Sandbar			$ 2607
9648SPAN-ST	Sterling Silver			$ 2607
9648SPAN-WH	White			$ 2252

OPTIONS

SKU	Description	MSRP
4200BRASDRSF	2” Brass Surefit Joint Shower Drain Brass drain material Snap in strainer-stainless steel No-caulk connection.	$ 48

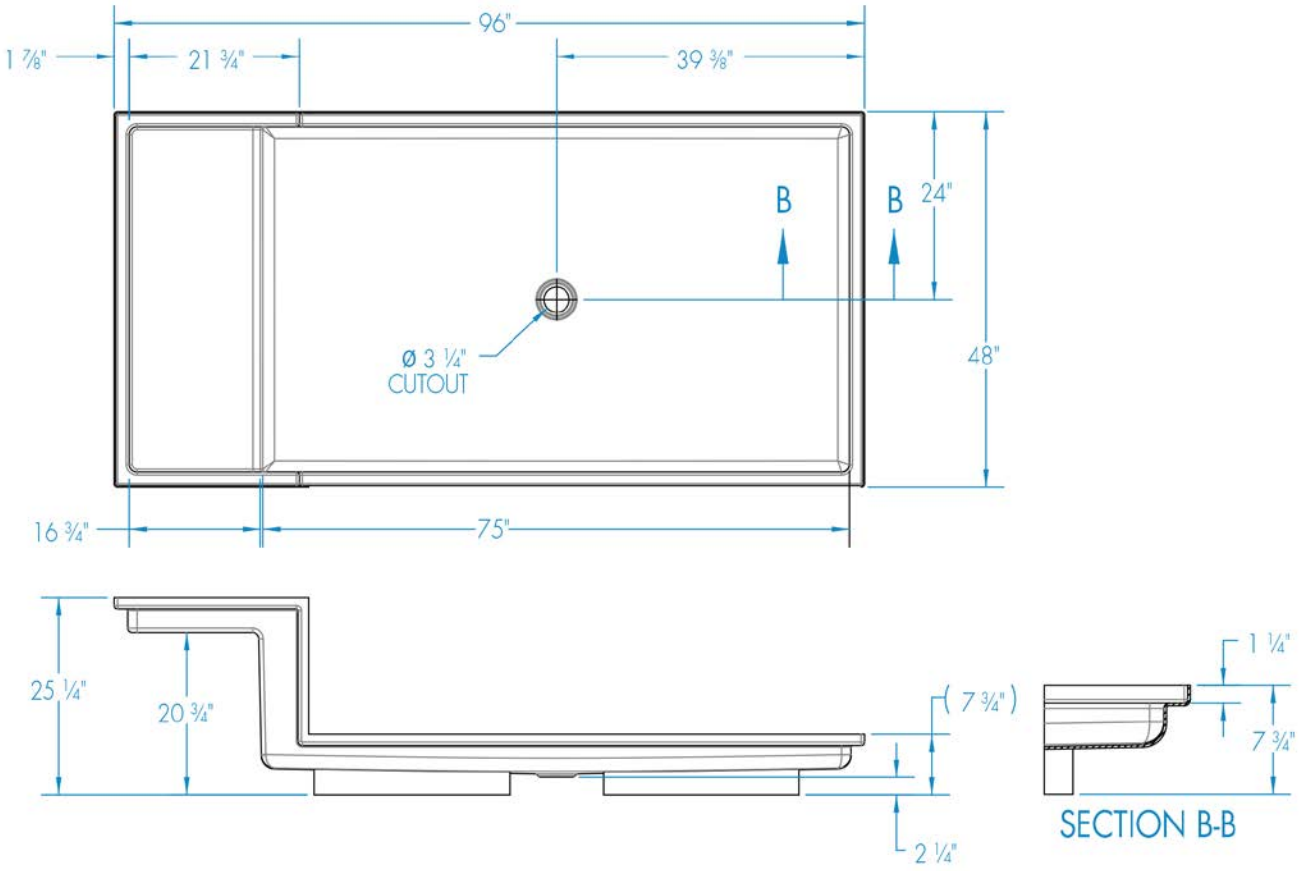
96"
1 7/8"
21 3/4"
39 3/8"
B
B
24"
Ø 3 1/4"
CUTOUT
48"
16 3/4"
75"
25 1/4"
20 3/4"
(7 3/4")
2 1/4"
1 1/4"
7 3/4"
SECTION B-B

Icon SB3232





Material : AcrylX™

Features

- Shower base
- Slip-resistant, textured floor for safety
- Center drain
- Low 3 Inch threshold
- Integrated weep holes
- Sloped threshold ensures water containment
- Pre-leveled legs, no mortar bed required
- Sleek minimalist design/li>
- AcrlyX™ applied acrylic surface

ICON SB3232 - PRICING CATEGORY : EK

SKU	Color	Configuration	Dimensions & Weight	MSRP
SB3232-BI	Biscuit	Center Drain / Alcove	32” x 32” x 4 1/4” / 39 lb 813mm x 813mm x 108mm / 17.69 kg	$ 487
SB3232-BO	Bone			$ 487
SB3232-WH	White			$ 452

OPTIONS

SKU	Description	MSRP
4200BRASDRSF	2” Brass Surefit Joint Shower Drain Brass drain material Snap in strainer-stainless steel No-caulk connection.	$ 48

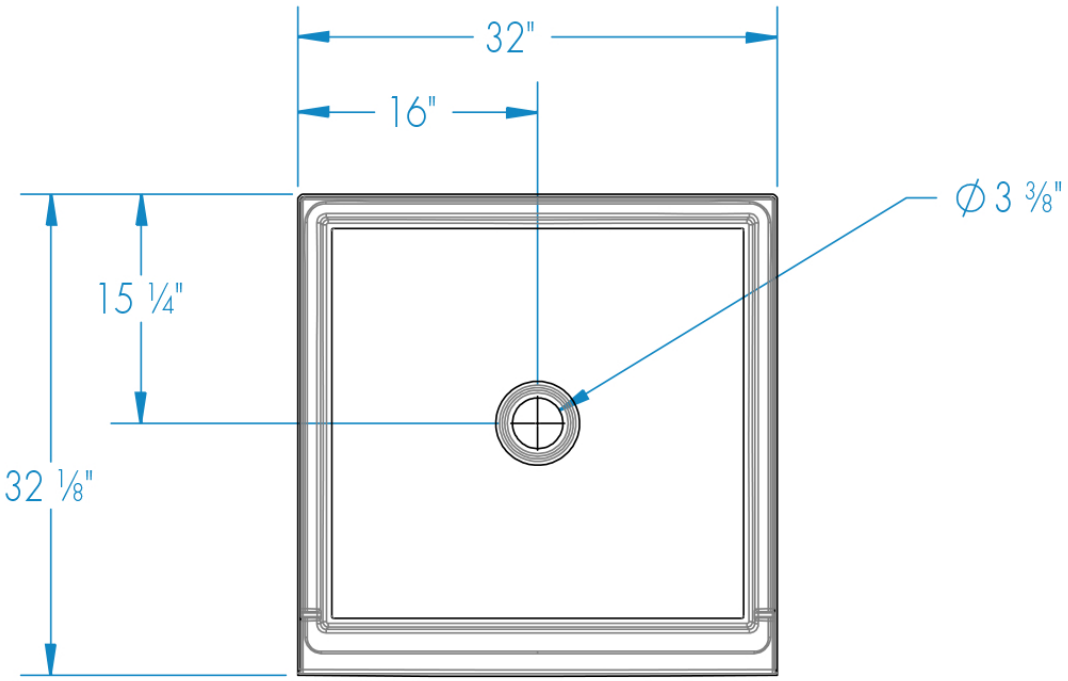

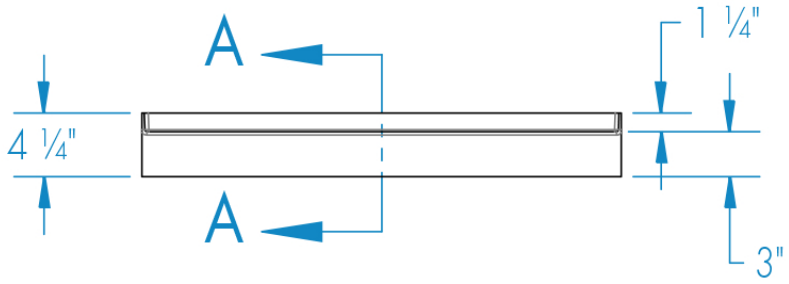

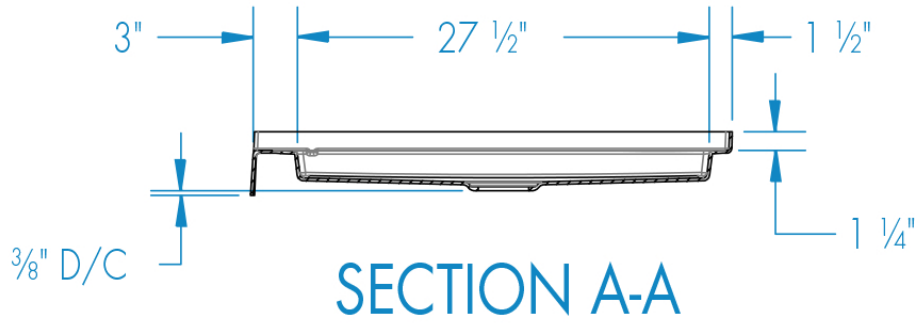

SECTION A-A

Icon SB3636





Material : AcrylX™

Features

- Shower base
- Slip-resistant, textured floor for safety
- Center drain
- Low 3 Inch threshold
- Integrated weep holes
- Sloped threshold ensures water containment
- Pre-leveled legs, no mortar bed required
- Sleek minimalist design/li>
- AcrlyX™ applied acrylic surface

ICON SB3636 - PRICING CATEGORY : EK

SKU	Color	Configuration	Dimensions & Weight	MSRP
SB3636-BI	Biscuit	Center Drain / Alcove	36” x 36” x 4 1/4” / 48 lb 914mm x 914mm x 108mm / 21.77 kg	$ 504
SB3636-BO	Bone			$ 504
SB3636-WH	White			$ 469

OPTIONS

SKU	Description	MSRP
4200BRASDRSF	2” Brass Surefit Joint Shower Drain Brass drain material Snap in strainer-stainless steel No-caulk connection.	$ 48

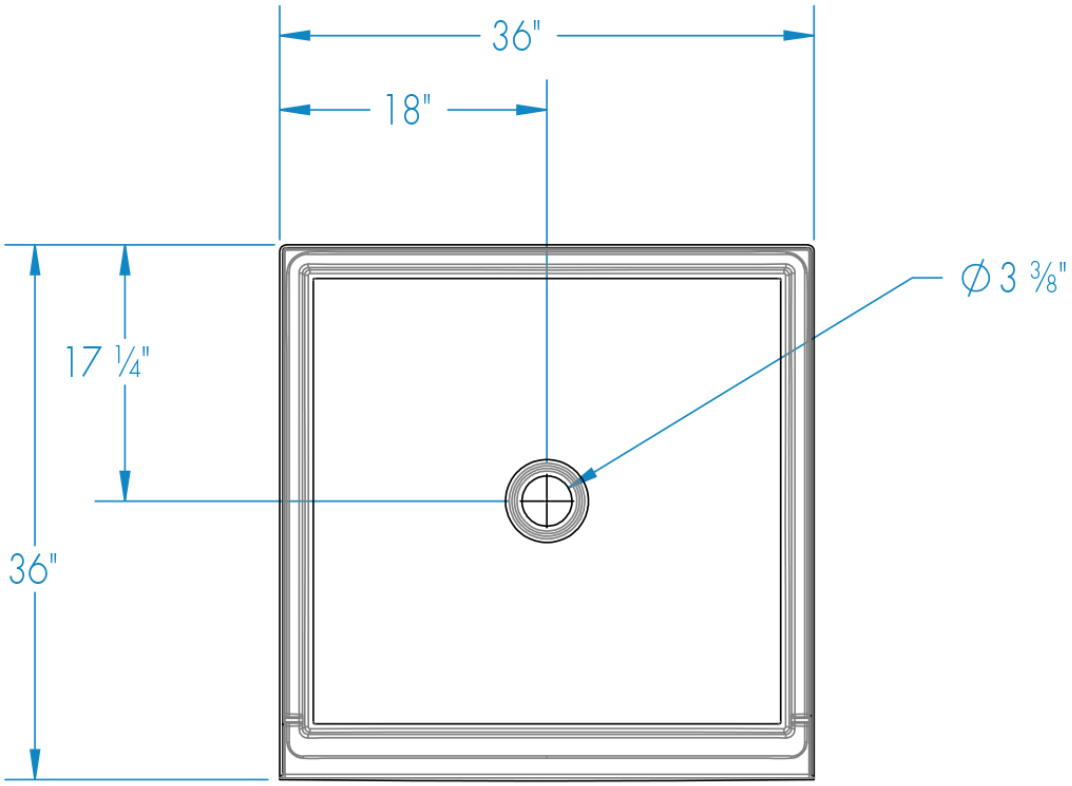

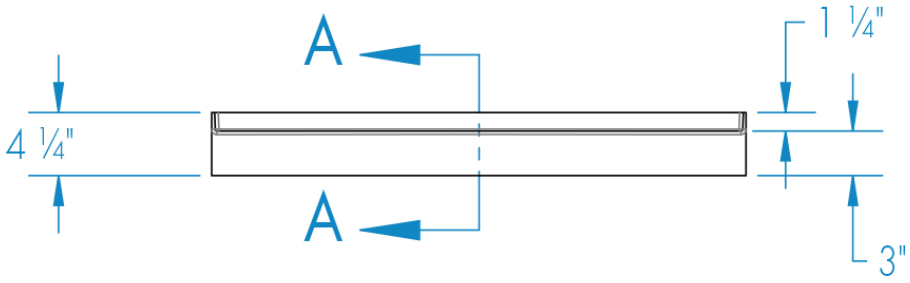

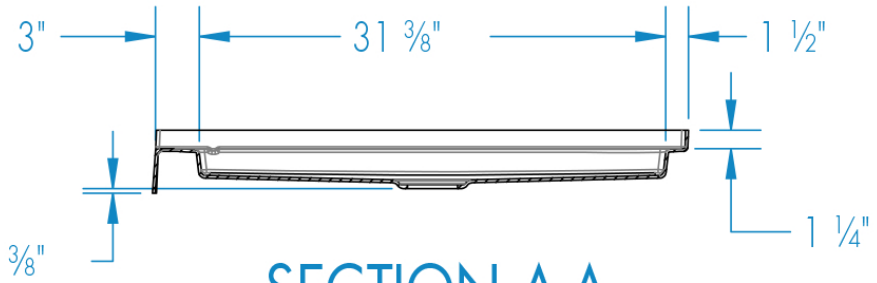

SECTION A-A

Icon SB3642





Material : AcrylX™

Features

- Shower base
- Slip-resistant, textured floor for safety
- Center drain
- Low 3 Inch threshold
- Integrated weep holes
- Sloped threshold ensures water containment
- Pre-leveled legs, no mortar bed required
- Sleek minimalist design/li>
- AcrlyX™ applied acrylic surface

ICON SB3642 - PRICING CATEGORY : EK

SKU	Color	Configuration	Dimensions & Weight	MSRP
SB3642-BI	Biscuit	Center Drain / Alcove	36” x 42” x 4 1/4” / 55 lb 914mm x 1067mm x 108mm / 24.94 kg	$ 521
SB3642-BO	Bone			$ 521
SB3642-WH	White			$ 486

OPTIONS

SKU	Description	MSRP
4200BRASDRSF	2” Brass Surefit Joint Shower Drain Brass drain material Snap in strainer-stainless steel No-caulk connection.	$ 48

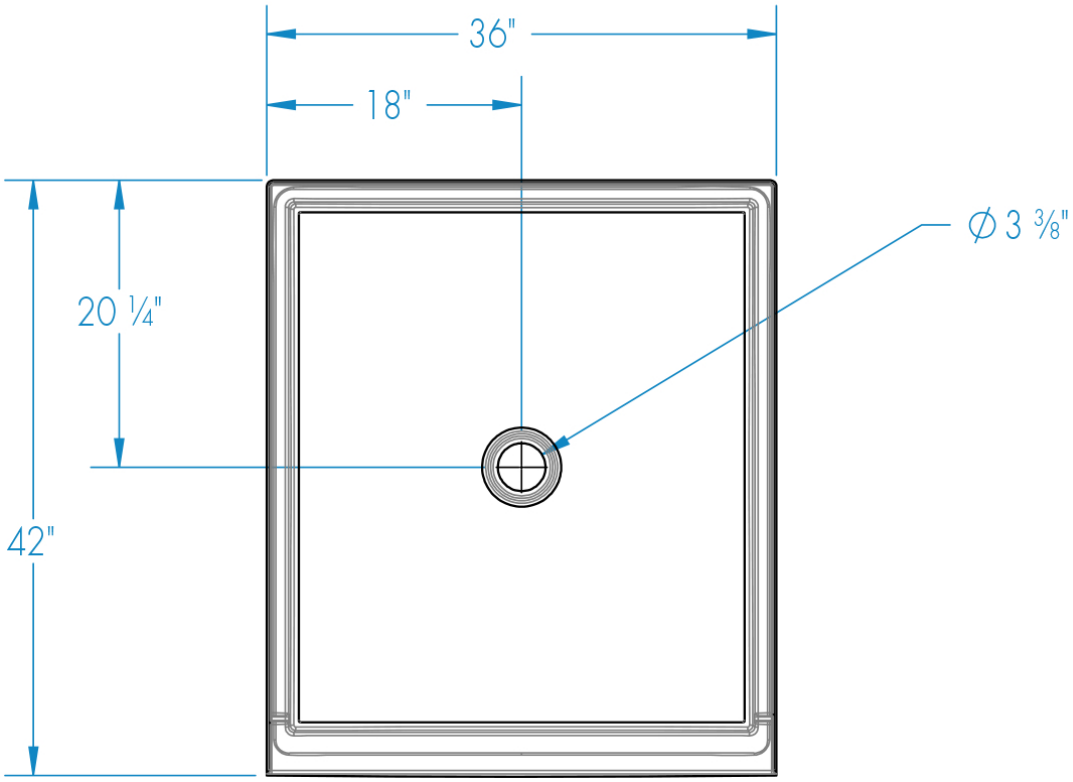

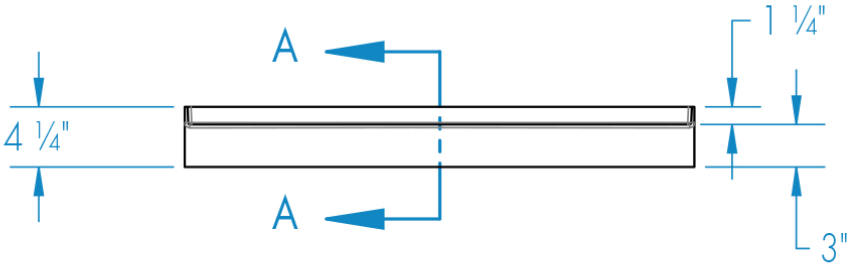

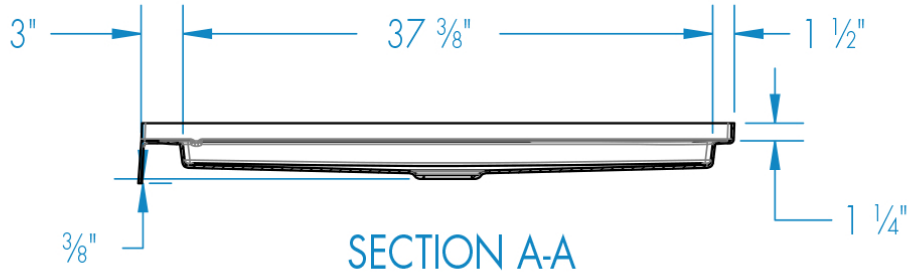

SECTION A-A

Icon SB4234





Material : AcrylX™

Features

- Shower base
- Slip-resistant, textured floor for safety
- Center drain
- Low 3 Inch threshold
- Integrated weep holes
- Sloped threshold ensures water containment
- Pre-leveled legs, no mortar bed required
- Sleek minimalist design/li>
- AcrlyX™ applied acrylic surface

ICON SB4234 - PRICING CATEGORY : EK

SKU	Color	Configuration	Dimensions & Weight	MSRP
SB4234-BI	Biscuit	Center Drain / Alcove	42” x 34” x 4 1/4” / 52 lb 1067mm x 864mm x 108mm / 23.58 kg	$ 521
SB4234-BO	Bone			$ 521
SB4234-WH	White			$ 486

OPTIONS

SKU	Description	MSRP
4200BRASDRSF	2” Brass Surefit Joint Shower Drain Brass drain material Snap in strainer-stainless steel No-caulk connection.	$ 48

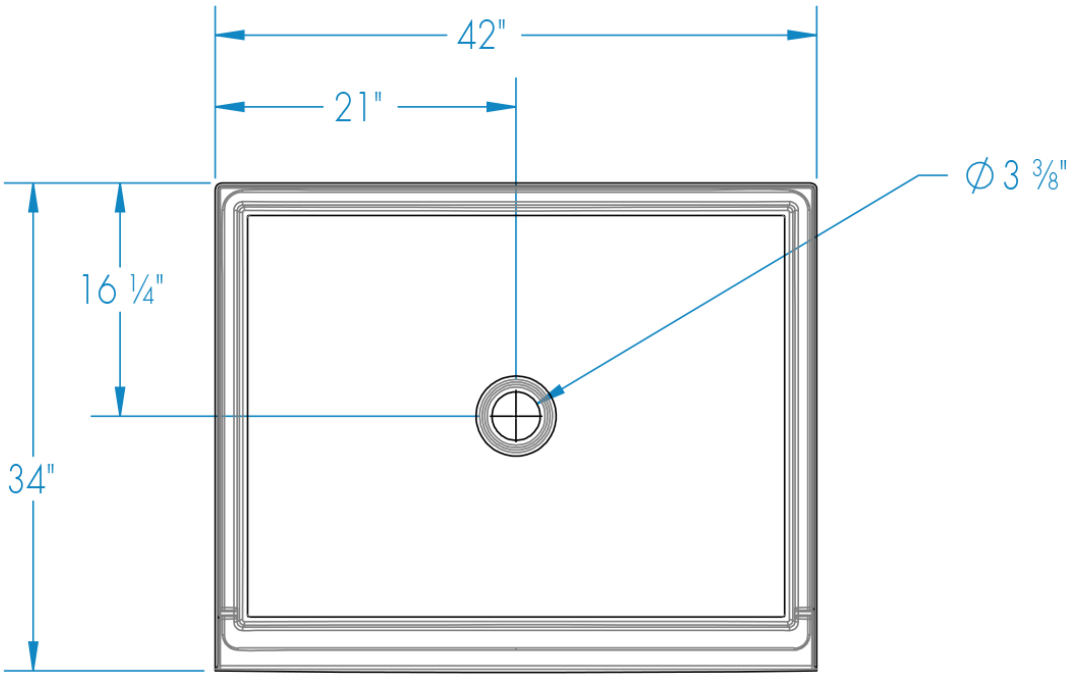

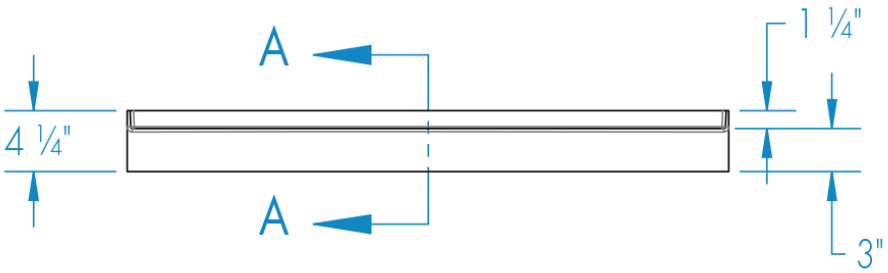

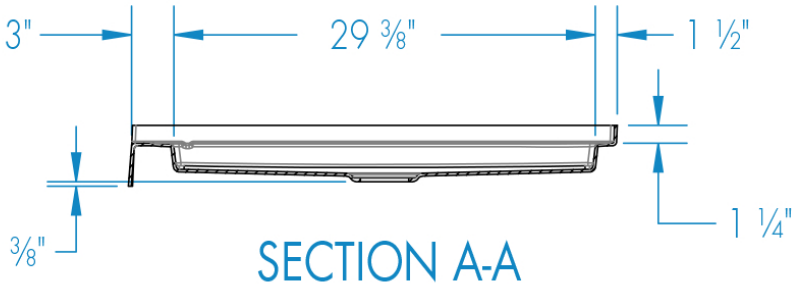

SECTION A-A

Icon SB4236





Material : AcrylX™

Features

- Shower base
- Slip-resistant, textured floor for safety
- Center drain
- Low 3 Inch threshold
- Integrated weep holes
- Sloped threshold ensures water containment
- Pre-leveled legs, no mortar bed required
- Sleek minimalist design/li>
- AcrlyX™ applied acrylic surface

ICON SB4236 - PRICING CATEGORY : EK

SKU	Color	Configuration	Dimensions & Weight	MSRP
SB4236-BI	Biscuit	Center Drain / Alcove	42” x 36” x 4 1/4” / 55 lb 1067mm x 914mm x 108mm / 24.94 kg	$ 521
SB4236-BO	Bone			$ 521
SB4236-WH	White			$ 486

OPTIONS

SKU	Description	MSRP
4200BRASDRSF	2” Brass Surefit Joint Shower Drain Brass drain material Snap in strainer-stainless steel No-caulk connection.	$ 48

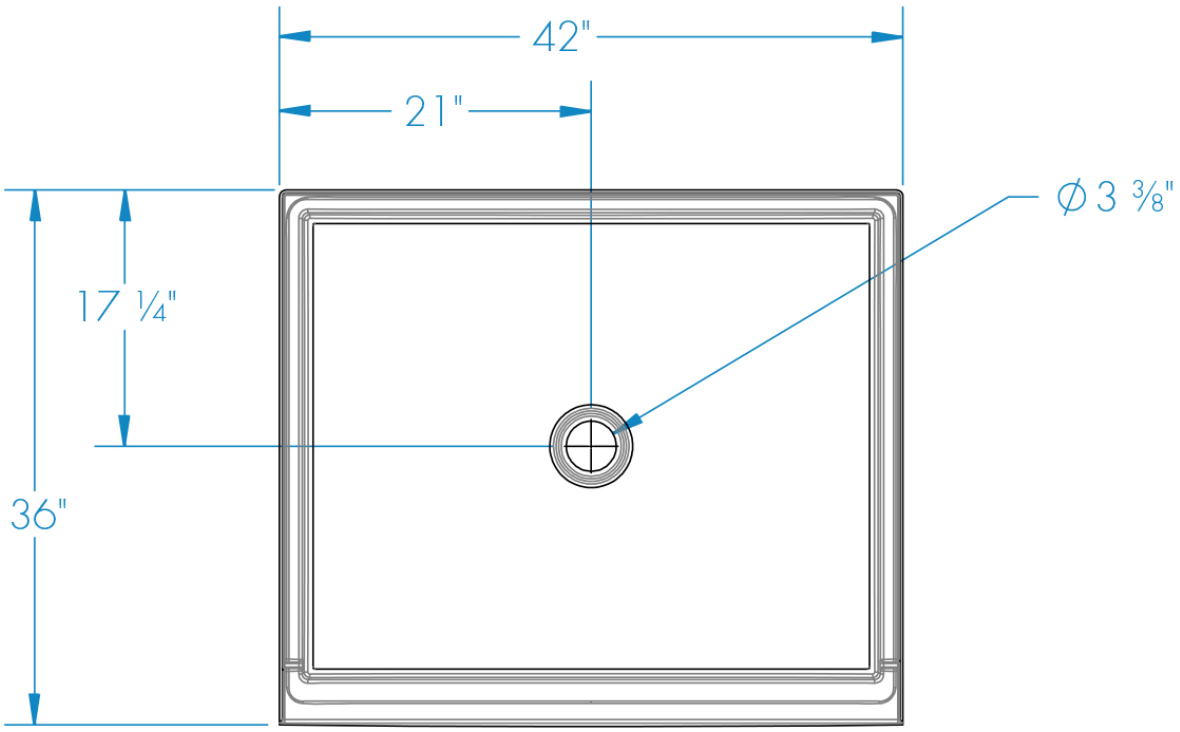

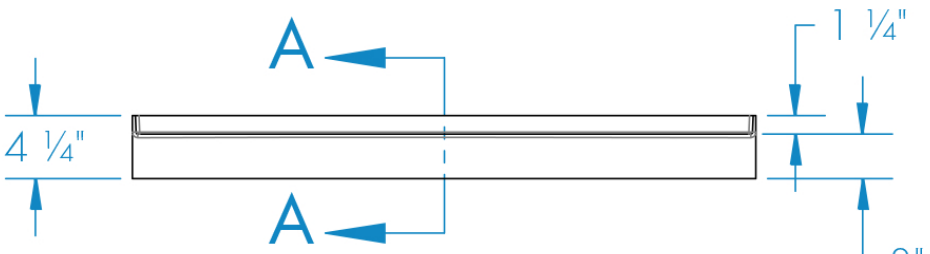

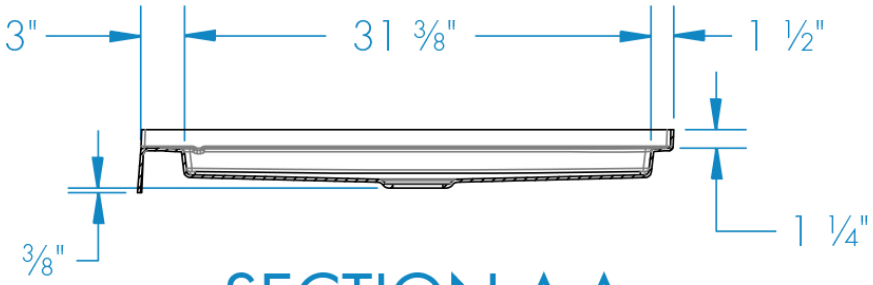

SECTION A-A

Icon SB4242





Material : AcrylX™

Features

- Shower base
- Slip-resistant, textured floor for safety
- Center drain
- Low 3 Inch threshold
- Integrated weep holes
- Sloped threshold ensures water containment
- Pre-leveled legs, no mortar bed required
- Sleek minimalist design/li>
- AcrlyX™ applied acrylic surface

ICON SB4242 - PRICING CATEGORY : EK

SKU	Color	Configuration	Dimensions & Weight	MSRP
SB4242-BI	Biscuit	Center Drain / Alcove	42” x 42” x 4 1/4” / 63 lb 1067mm x 1067mm x 108mm / 28.57 kg	$ 589
SB4242-BO	Bone			$ 589
SB4242-WH	White			$ 554

OPTIONS

SKU	Description	MSRP
4200BRASDRSF	2” Brass Surefit Joint Shower Drain Brass drain material Snap in strainer-stainless steel No-caulk connection.	$ 48

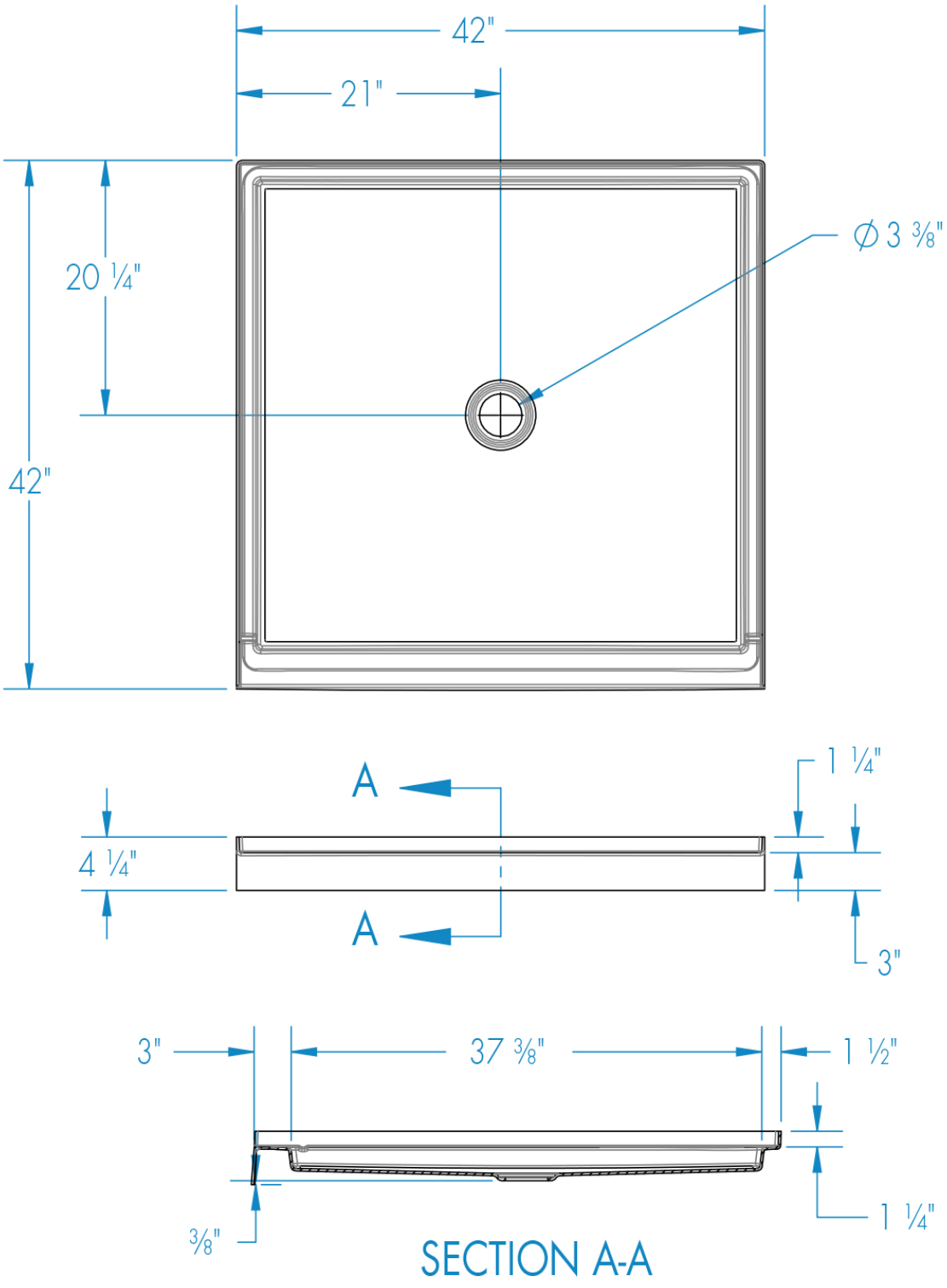

SECTION A-A

Icon SB4832





Material : AcrylX™

Features

- Shower base
- Slip-resistant, textured floor for safety
- Center drain
- Low 3 Inch threshold
- Integrated weep holes
- Sloped threshold ensures water containment
- Pre-leveled legs, no mortar bed required
- Sleek minimalist design/li>
- AcrlyX™ applied acrylic surface

ICON SB4832 - PRICING CATEGORY : EK

SKU	Color	Configuration	Dimensions & Weight	MSRP
SB4832-BI	Biscuit	Center Drain / Alcove	48” x 32” x 4 1/4” / 56 lb 1219mm x 813mm x 108mm / 25.4 kg	$ 554
SB4832-BO	Bone			$ 554
SB4832-WH	White			$ 519

OPTIONS

SKU	Description	MSRP
4200BRASDRSF	2” Brass Surefit Joint Shower Drain Brass drain material Snap in strainer-stainless steel No-caulk connection.	$ 48

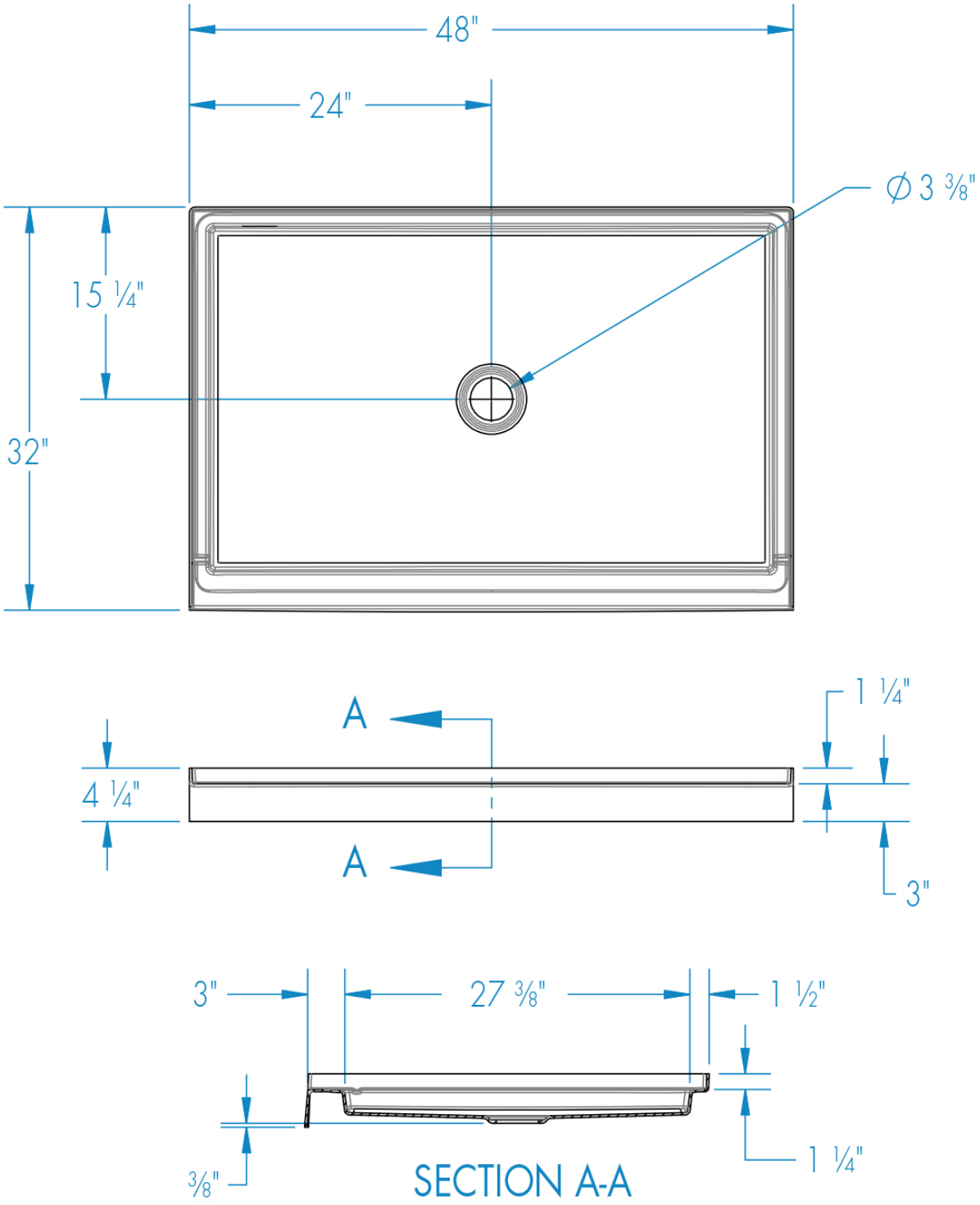
48"
24"
Ø 3 3/8"
15 1/4"
32"
A
A
4 1/4"
1 1/4"
3"
3"
27 3/8"
1 1/2"
3/8"
1 1/4"
SECTION A-A

Icon SB4834





Material : AcrylX™

Features

- Shower base
- Slip-resistant, textured floor for safety
- Center drain
- Low 3 Inch threshold
- Integrated weep holes
- Sloped threshold ensures water containment
- Pre-leveled legs, no mortar bed required
- Sleek minimalist design/li>
- AcrlyX™ applied acrylic surface

ICON SB4834 - PRICING CATEGORY : EK

SKU	Color	Configuration	Dimensions & Weight	MSRP
SB4834-BI	Biscuit	Center Drain / Alcove	48” x 34” x 4 1/4” / 59 lb 1219mm x 864mm x 108mm / 26.76 kg	$ 554
SB4834-BO	Bone			$ 554
SB4834-WH	White			$ 519

OPTIONS

SKU	Description	MSRP
4200BRASDRSF	2” Brass Surefit Joint Shower Drain Brass drain material Snap in strainer-stainless steel No-caulk connection.	$ 48

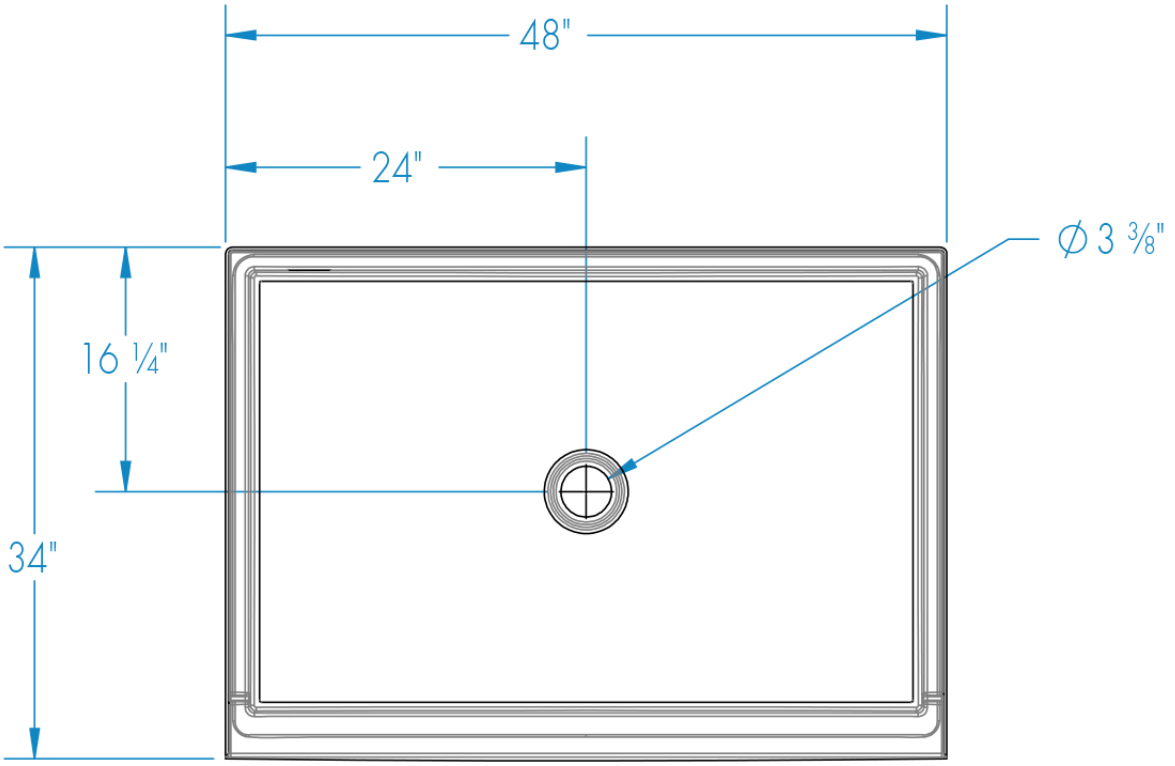

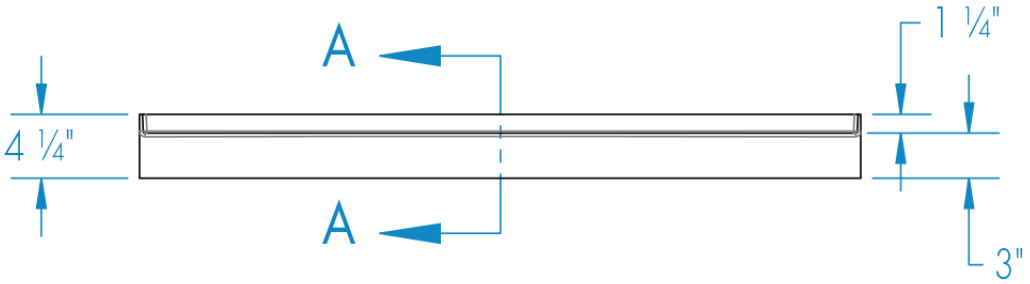

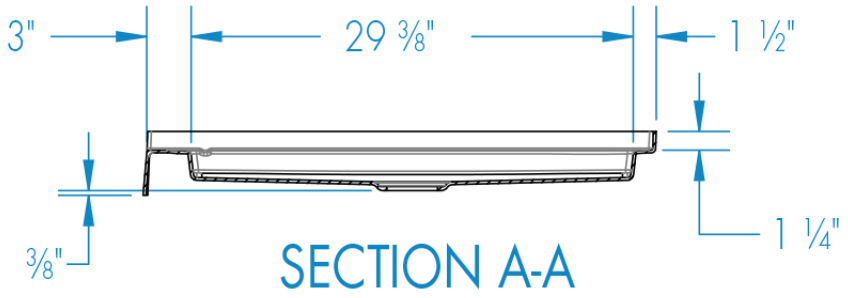

SECTION A-A

Icon SB4836





Material : AcrylX™

Features

- Shower base
- Slip-resistant, textured floor for safety
- Center drain
- Low 3 Inch threshold
- Integrated weep holes
- Sloped threshold ensures water containment
- Pre-leveled legs, no mortar bed required
- Sleek minimalist design/li>
- AcrlyX™ applied acrylic surface

ICON SB4836 - PRICING CATEGORY : EK

SKU	Color	Configuration	Dimensions & Weight	MSRP
SB4836-BI	Biscuit	Center Drain / Alcove	48” x 36” x 4 1/4” / 62 lb 1219mm x 914mm x 108mm / 28.12 kg	$ 572
SB4836-BO	Bone			$ 572
SB4836-WH	White			$ 537

OPTIONS

SKU	Description	MSRP
4200BRASDRSF	2” Brass Surefit Joint Shower Drain Brass drain material Snap in strainer-stainless steel No-caulk connection.	$ 48

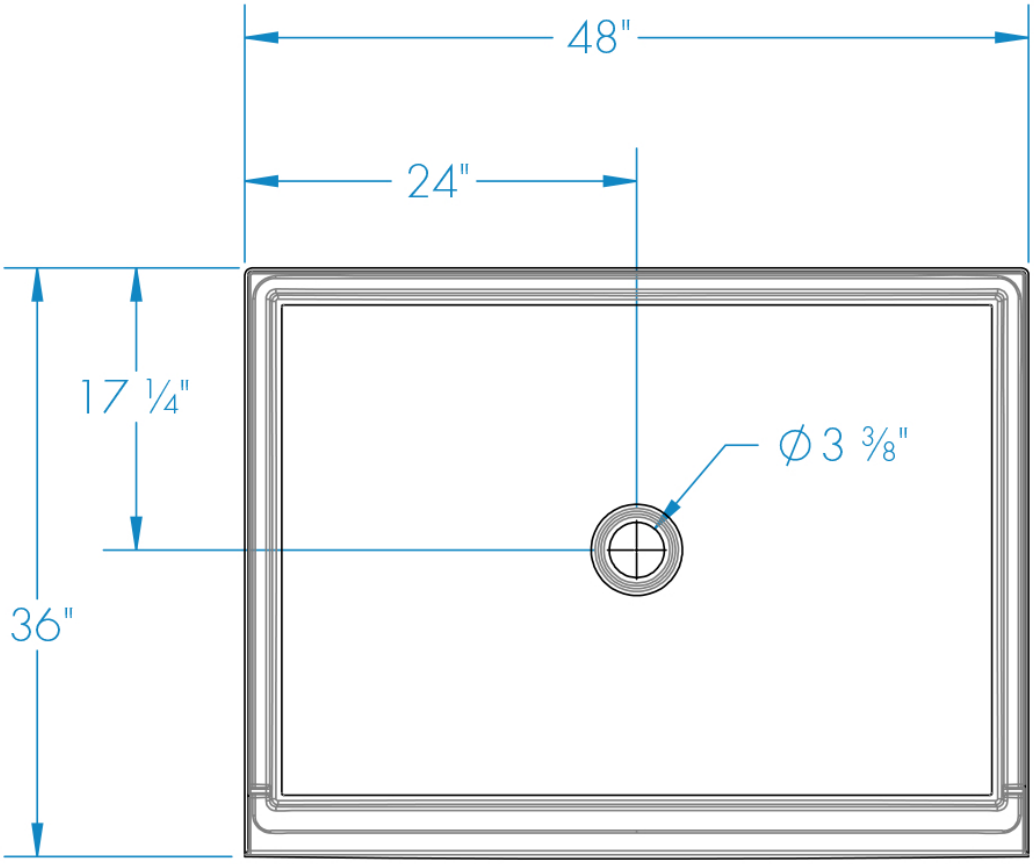

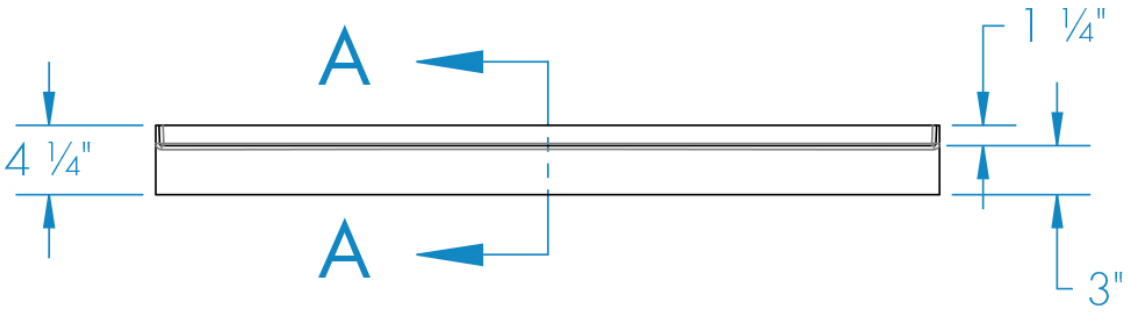

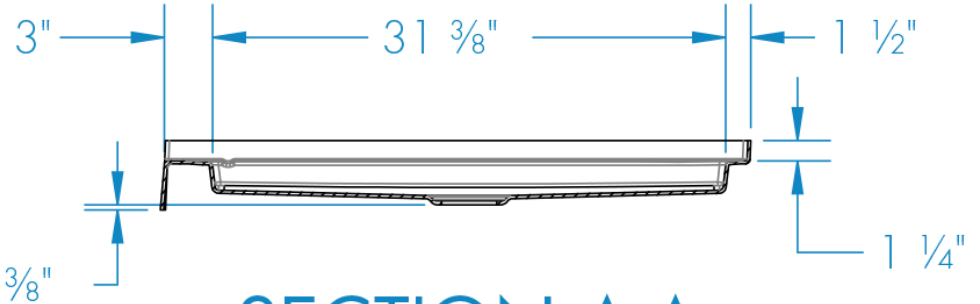

SECTION A-A

Icon SB4842





Material : AcrylX™

Features

- Shower base
- Slip-resistant, textured floor for safety
- Center drain
- Low 3 Inch threshold
- Integrated weep holes
- Sloped threshold ensures water containment
- Pre-leveled legs, no mortar bed required
- Sleek minimalist design/li>
- AcrlyX™ applied acrylic surface

ICON SB4842 - PRICING CATEGORY : EK

SKU	Color	Configuration	Dimensions & Weight	MSRP
SB4842-BI	Biscuit	Center Drain / Alcove	48” x 42” x 4 1/4” / 71 lb 1219mm x 1067mm x 108mm / 32.2 kg	$ 653
SB4842-BO	Bone			$ 653
SB4842-WH	White			$ 618

OPTIONS

SKU	Description	MSRP
4200BRASDRSF	2” Brass Surefit Joint Shower Drain Brass drain material Snap in strainer-stainless steel No-caulk connection.	$ 48

Surface Area: 17.2 sq. ft.
Floor Surf. Area: 11.1 sq. ft.

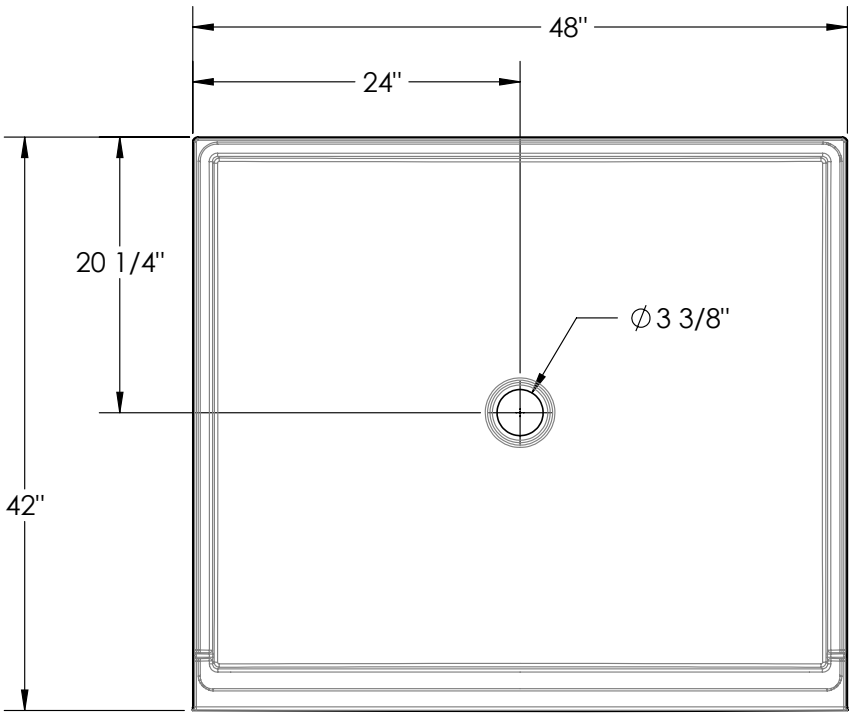

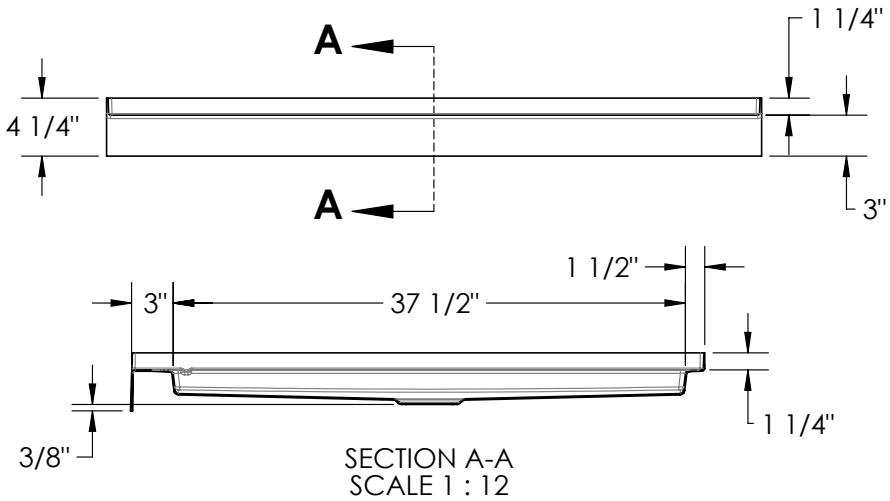

SECTION A-A
SCALE 1 : 12

	NAME	DATE
DRAWN	P.PRIOR	07/08/2020
CHECKED		
PROD. MGR		
R&D MGR.		
COMMENT:		

AQUATIC
1700 N. Delilah St.
Corona, CA 92879

TITLE:
Model No. 4842 Center Drain

SIZE	DWG. NO.	ECO#
A	4842 Center Drain	XXXX
SCALE 1:50		SHEET 1 OF 2

File Location:

The attached material and all the proprietary information of Aquatic, contained hereon is the exclusive property of Aquatic and will be treated as confidential and not copied or disclosed, except as expressly provided by written agreement with Aquatic.

Icon SB4848





Material : AcrylX™

Features

- Shower base
- Slip-resistant, textured floor for safety
- Center drain
- Low 3 Inch threshold
- Integrated weep holes
- Sloped threshold ensures water containment
- Pre-leveled legs, no mortar bed required
- Sleek minimalist design/li>
- AcrlyX™ applied acrylic surface

ICON SB4848 - PRICING CATEGORY : EK

SKU	Color	Configuration	Dimensions & Weight	MSRP
SB4848-BI	Biscuit	Center Drain / Alcove	48” x 48” x 4 1/4” / 81 lb 1219mm x 1219mm x 108mm / 36.73 kg	$ 704
SB4848-BO	Bone			$ 704
SB4848-WH	White			$ 669

OPTIONS

SKU	Description	MSRP
4200BRASDRSF	2” Brass Surefit Joint Shower Drain Brass drain material Snap in strainer-stainless steel No-caulk connection.	$ 48

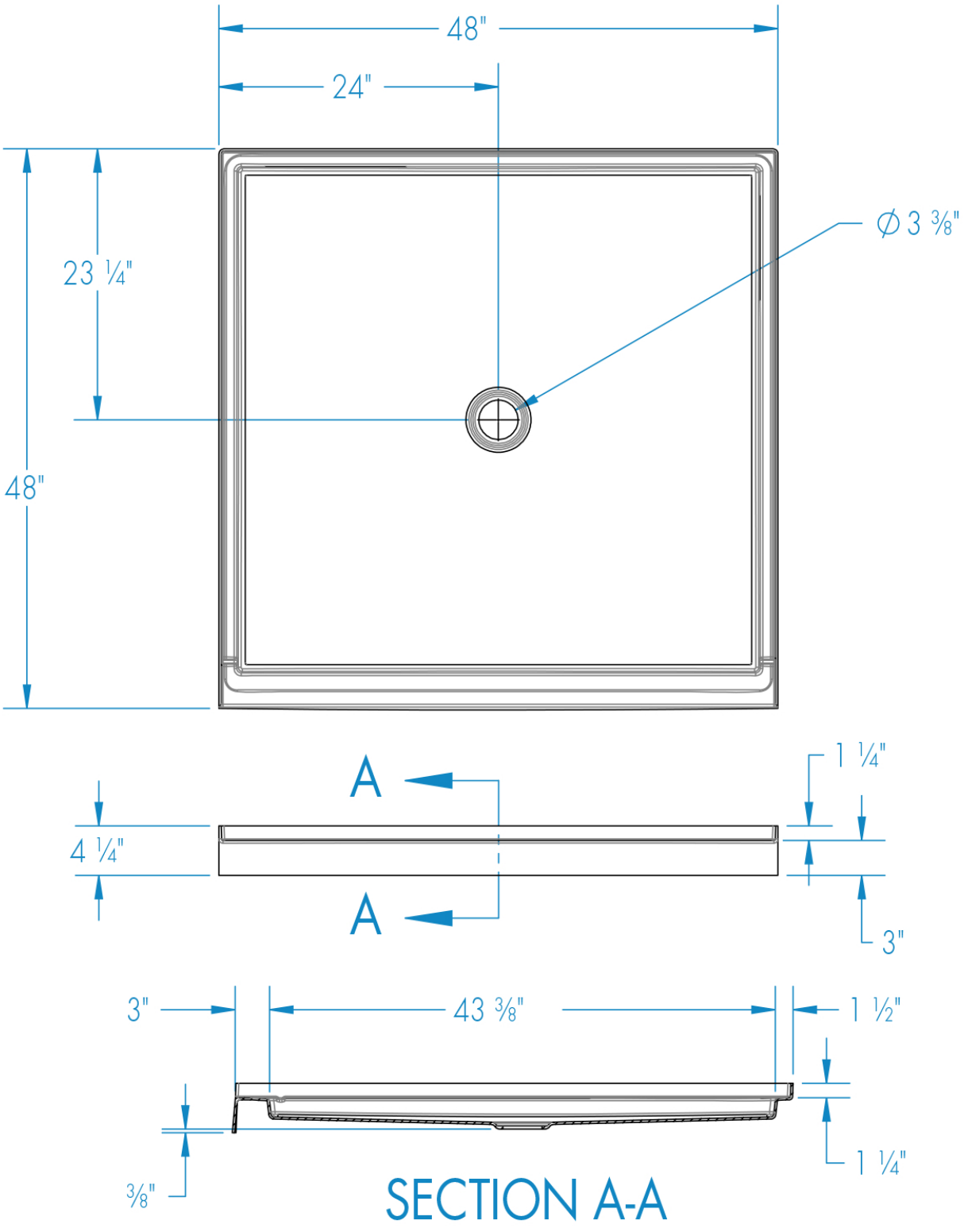

SECTION A-A

Icon SB6030L/R





Material : AcrylX™

Features

- Shower base
- Slip-resistant, textured floor for safety
- Left or right hand drain
- Low 3 Inch threshold
- Integrated weep holes
- Sloped threshold ensures water containment
- Pre-leveled legs, no mortar bed required
- Sleek minimalist design
- AcrlyX™ applied acrylic surface

ICON SB6030L/R - PRICING CATEGORY : EK

SKU	Color	Configuration	Dimensions & Weight	MSRP
SB6030L-BI	Biscuit	Left-hand Drain / Alcove	60” x 30” x 4 1/4” / 65 lb 1524mm x 762mm x 108mm / 29.48 kg	$ 672
SB6030L-BO	Bone			$ 672
SB6030L-WH	White			$ 637
SB6030R-BI	Biscuit	Right-hand Drain / Alcove		$ 672
SB6030R-BO	Bone			$ 672
SB6030R-WH	White			$ 637

OPTIONS

SKU	Description	MSRP
4200BRASDRSF	2” Brass Surefit Joint Shower Drain Brass drain material Snap in strainer-stainless steel No-caulk connection.	$ 48

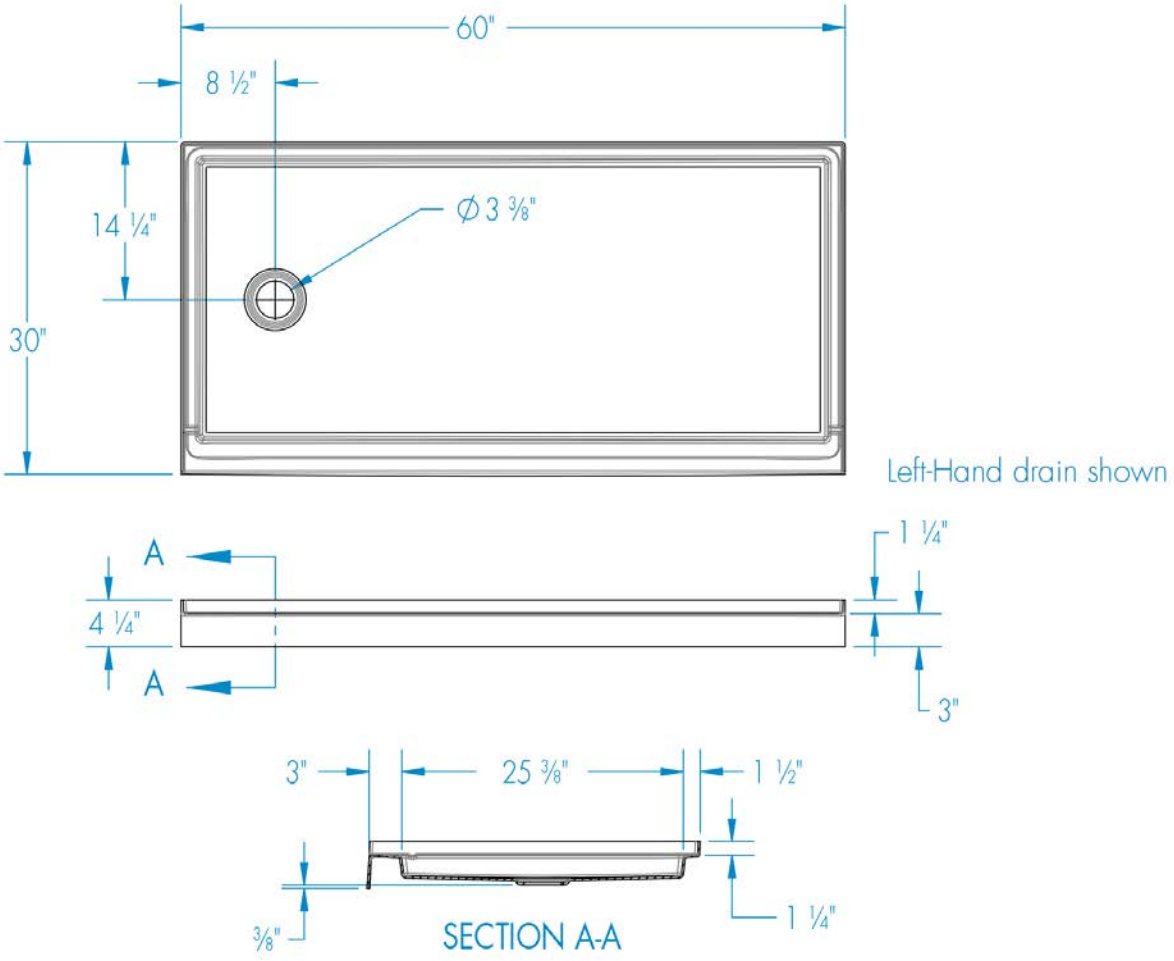
60"
8 ½"
14 ¼"
Ø 3 ⅜"
30"
Left-Hand drain shown
A
4 ¼"
A
1 ¼"
3"
3"
25 ⅜"
1 ½"
⅜"
1 ¼"
SECTION A-A

Icon SB6032





Material : AcrylX™

Features

- Shower base
- Slip-resistant, textured floor for safety
- Center drain
- Low 3 Inch threshold
- Integrated weep holes
- Sloped threshold ensures water containment
- Pre-leveled legs, no mortar bed required
- Sleek minimalist design/li>
- AcrlyX™ applied acrylic surface

ICON SB6032 - PRICING CATEGORY : EK

SKU	Color	Configuration	Dimensions & Weight	MSRP
SB6032-BI	Biscuit	Center Drain / Alcove	60” x 32” x 4 1/4” / 69 lb 1524mm x 813mm x 108mm / 31.29 kg	$ 637
SB6032-BO	Bone			$ 637
SB6032-WH	White			$ 602

OPTIONS

SKU	Description	MSRP
4200BRASDRSF	2” Brass Surefit Joint Shower Drain Brass drain material Snap in strainer-stainless steel No-caulk connection.	$ 48

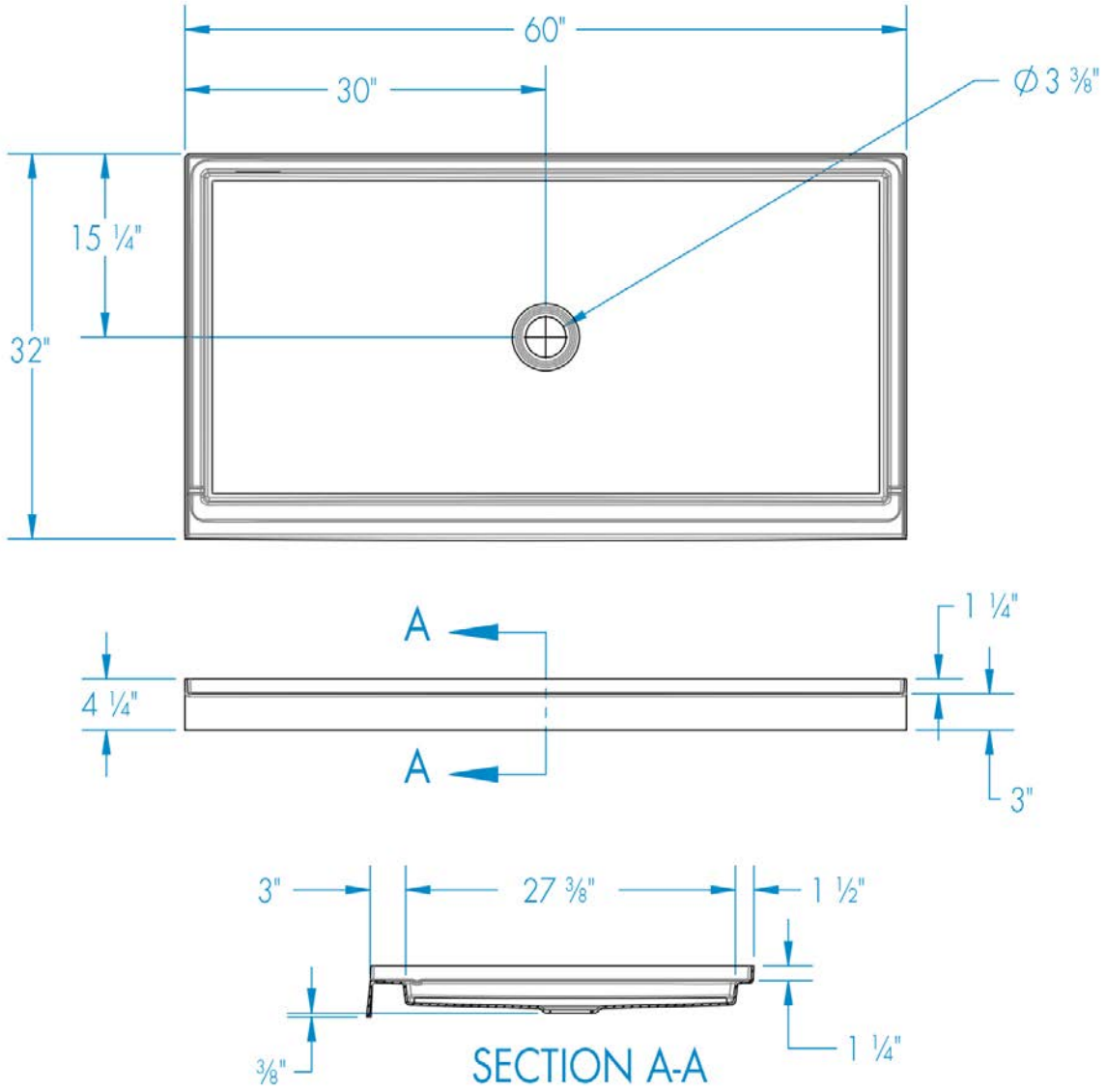
60"
30"
Ø 3 3/8"
15 1/4"
32"
A
A
4 1/4"
1 1/4"
3"
3"
27 3/8"
1 1/2"
3/8"
1 1/4"
SECTION A-A

Icon SB6032L/R





Material : AcrylX™

Features

- Shower base
- Slip-resistant, textured floor for safety
- Left or right hand drain
- Low 3 Inch threshold
- Integrated weep holes
- Sloped threshold ensures water containment
- Pre-leveled legs, no mortar bed required
- Sleek minimalist design
- AcrlyX™ applied acrylic surface

ICON SB6032L/R - PRICING CATEGORY : EK

SKU	Color	Configuration	Dimensions & Weight	MSRP
SB6032L-BI	Biscuit	Left-hand Drain / Alcove	60” x 32” x 4 1/4” / 69 lb 1524mm x 813mm x 108mm / 31.29 kg	$ 672
SB6032L-BO	Bone			$ 672
SB6032L-WH	White			$ 637
SB6032R-BI	Biscuit	Right-hand Drain / Alcove		$ 672
SB6032R-BO	Bone			$ 672
SB6032R-WH	White			$ 637

OPTIONS

SKU	Description	MSRP
4200BRASDRSF	2” Brass Surefit Joint Shower Drain Brass drain material Snap in strainer-stainless steel No-caulk connection.	$ 48

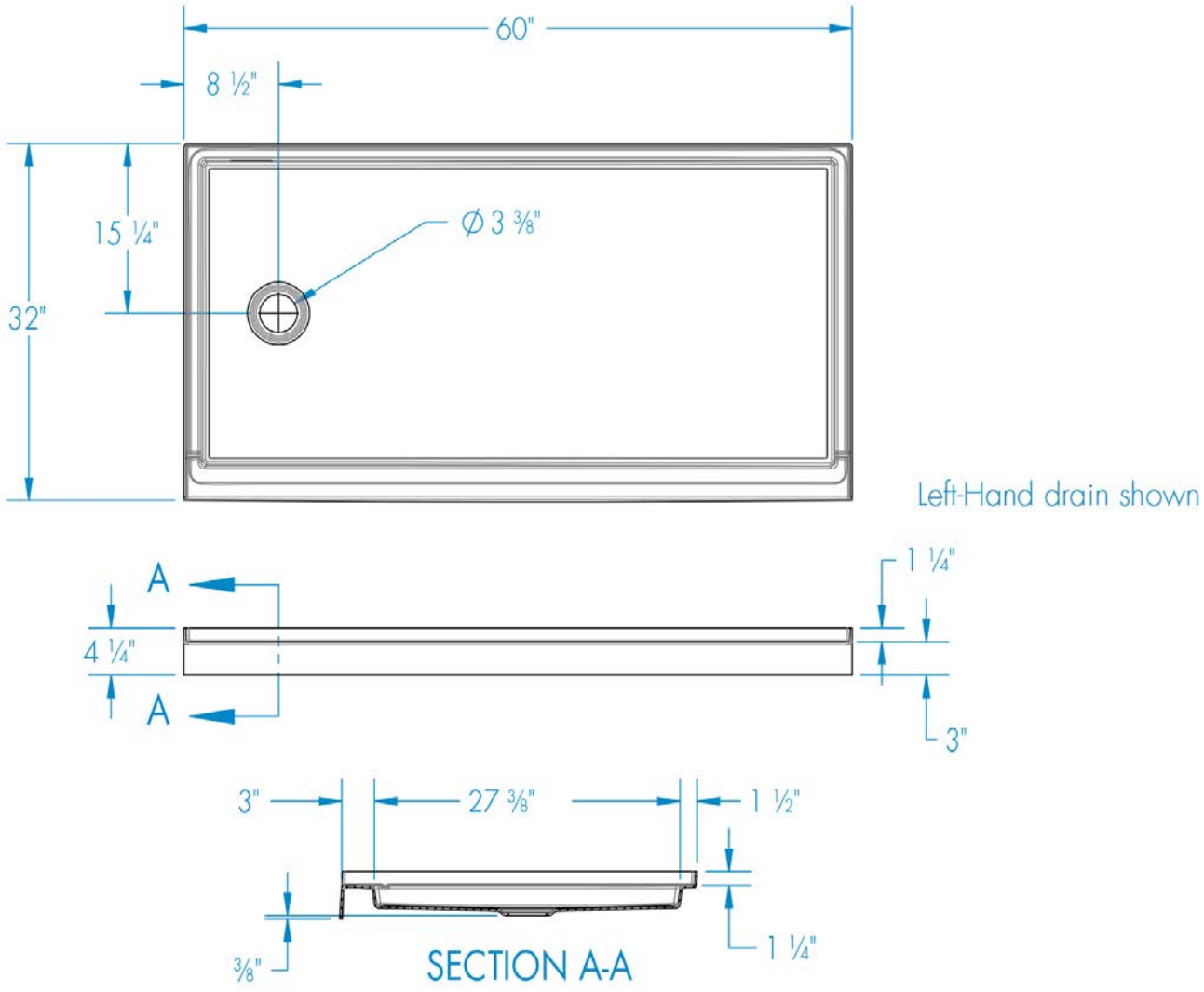
60"
8 ½"
15 ¼"
32"
Ø 3 ⅜"
Left-Hand drain shown
A
4 ¼"
A
1 ¼"
3"
3"
27 ⅜"
1 ½"
⅜"
1 ¼"
SECTION A-A

Icon SB6034





Material : AcrylX™

Features

- Shower base
- Slip-resistant, textured floor for safety
- Center drain
- Low 3 Inch threshold
- Integrated weep holes
- Sloped threshold ensures water containment
- Pre-leveled legs, no mortar bed required
- Sleek minimalist design/li>
- AcrlyX™ applied acrylic surface

ICON SB6034 - PRICING CATEGORY : EK

SKU	Color	Configuration	Dimensions & Weight	MSRP
SB6034-BI	Biscuit	Center Drain / Alcove	60” x 34” x 4 1/4” / 71 lb 1524mm x 864mm x 108mm / 32.2 kg	$ 653
SB6034-BO	Bone			$ 653
SB6034-WH	White			$ 618

OPTIONS

SKU	Description	MSRP
4200BRASDRSF	2” Brass Surefit Joint Shower Drain Brass drain material Snap in strainer-stainless steel No-caulk connection.	$ 48

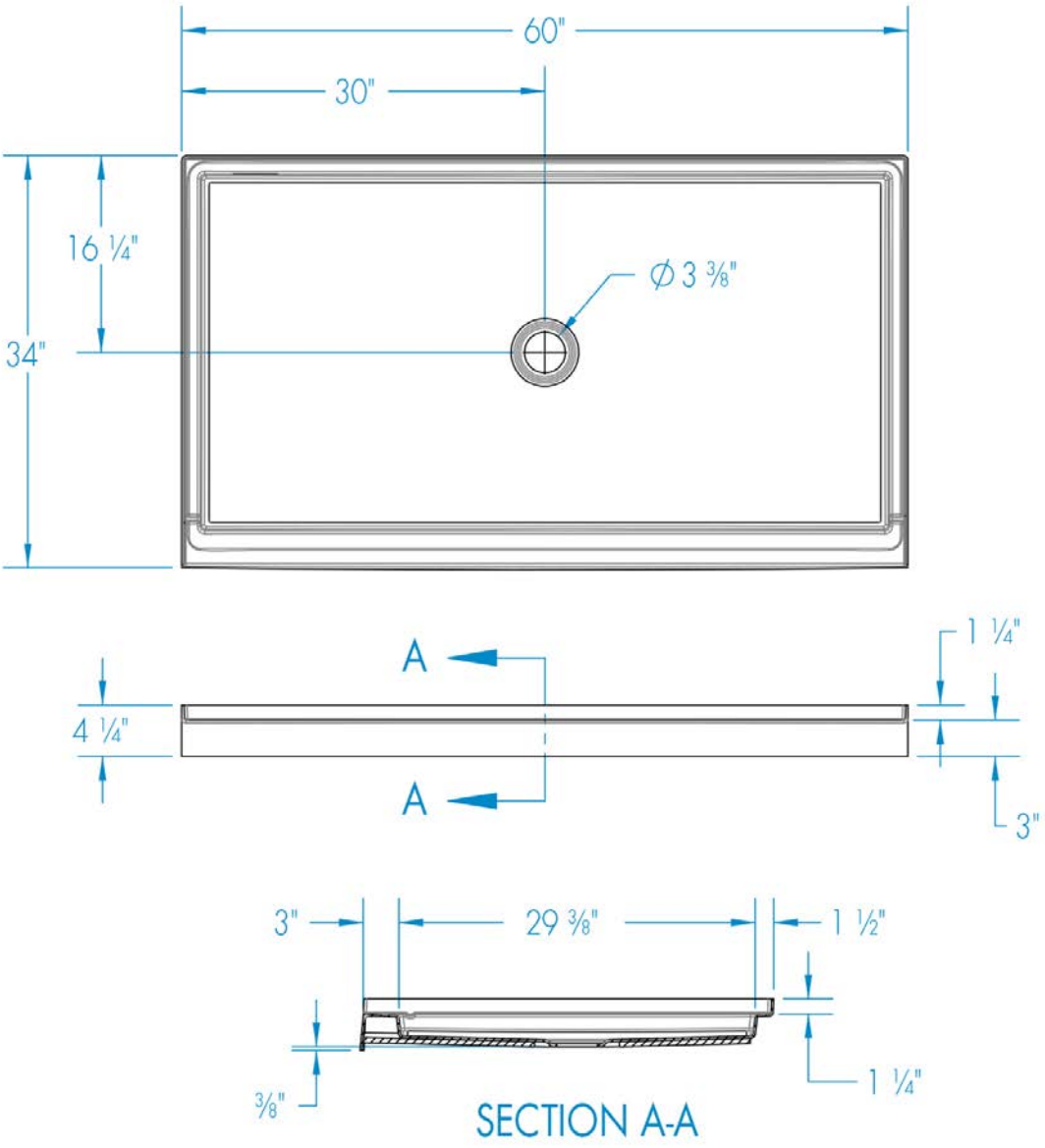

SECTION A-A

Icon SB6034L/R





Material : AcrylX™

Features

- Shower base
- Slip-resistant, textured floor for safety
- Left or right hand drain
- Low 3 Inch threshold
- Integrated weep holes
- Sloped threshold ensures water containment
- Pre-leveled legs, no mortar bed required
- Sleek minimalist design
- AcrlyX™ applied acrylic surface

ICON SB6034L/R - PRICING CATEGORY : EK

SKU	Color	Configuration	Dimensions & Weight	MSRP
SB6034L-BI	Biscuit	Left-hand Drain / Alcove	60” x 34” x 4 1/4” / 71 lb 1524mm x 864mm x 108mm / 32.2 kg	$ 672
SB6034L-BO	Bone			$ 672
SB6034L-WH	White			$ 637
SB6034R-BI	Biscuit	Right-hand Drain / Alcove		$ 672
SB6034R-BO	Bone			$ 672
SB6034R-WH	White			$ 637

OPTIONS

SKU	Description	MSRP
4200BRASDRSF	2” Brass Surefit Joint Shower Drain Brass drain material Snap in strainer-stainless steel No-caulk connection.	$ 48

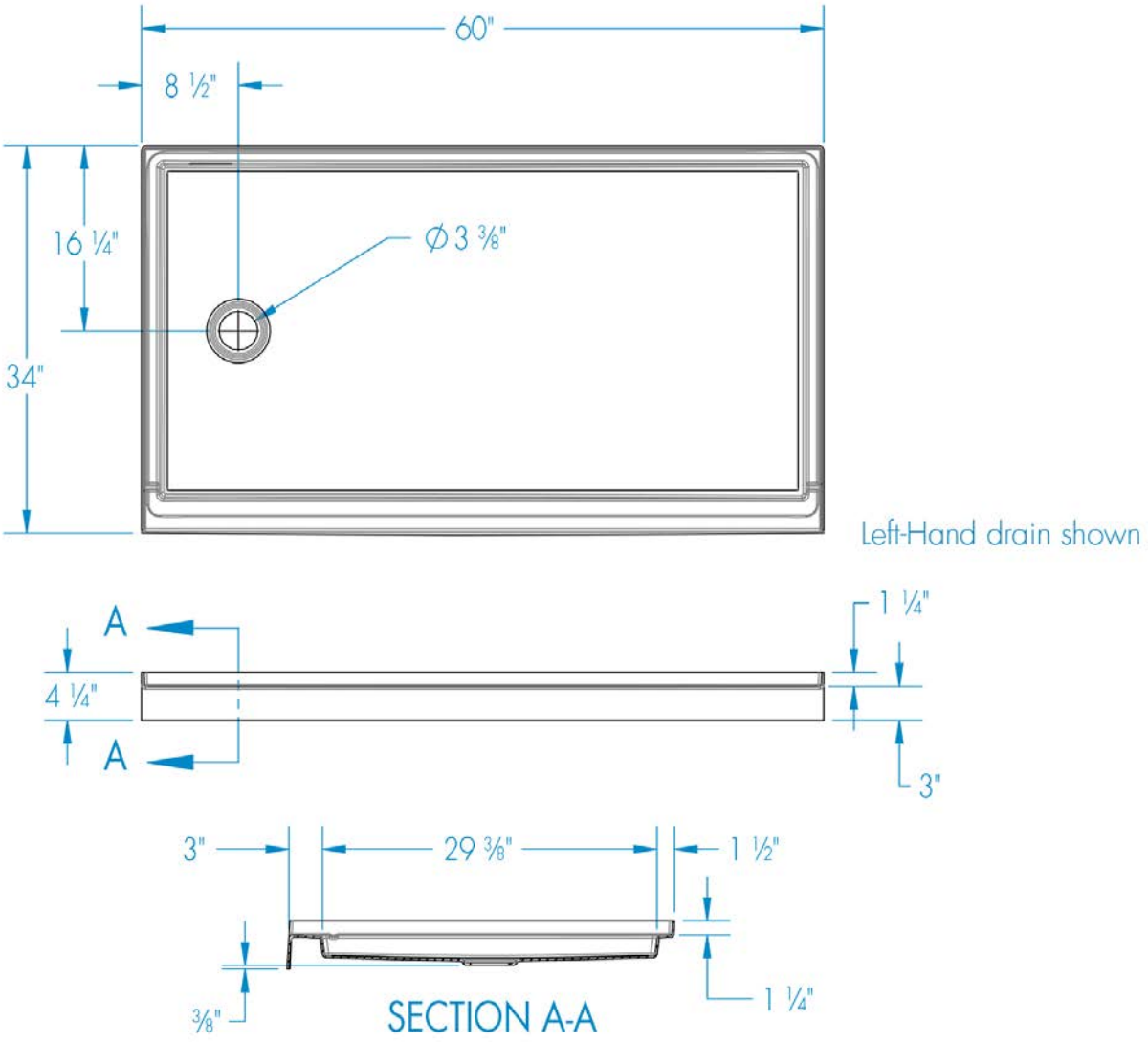
60"
8 ½"
16 ¼"
Ø 3 ⅜"
34"
Left-Hand drain shown
A
4 ¼"
A
1 ¼"
3"
3"
29 ⅜"
1 ½"
⅜"
1 ¼"
SECTION A-A

Icon SB6036





Material : AcrylX™

Features

- Shower base
- Slip-resistant, textured floor for safety
- Center drain
- Low 3 Inch threshold
- Integrated weep holes
- Sloped threshold ensures water containment
- Pre-leveled legs, no mortar bed required
- Sleek minimalist design/li>
- AcrlyX™ applied acrylic surface

ICON SB6036 - PRICING CATEGORY : EK

SKU	Color	Configuration	Dimensions & Weight	MSRP
SB6036-BI	Biscuit	Center Drain / Alcove	60” x 36” x 4 1/4” / 77 lb 1524mm x 914mm x 108mm / 34.92 kg	$ 687
SB6036-BO	Bone			$ 687
SB6036-WH	White			$ 652

OPTIONS

SKU	Description	MSRP
4200BRASDRSF	2” Brass Surefit Joint Shower Drain Brass drain material Snap in strainer-stainless steel No-caulk connection.	$ 48

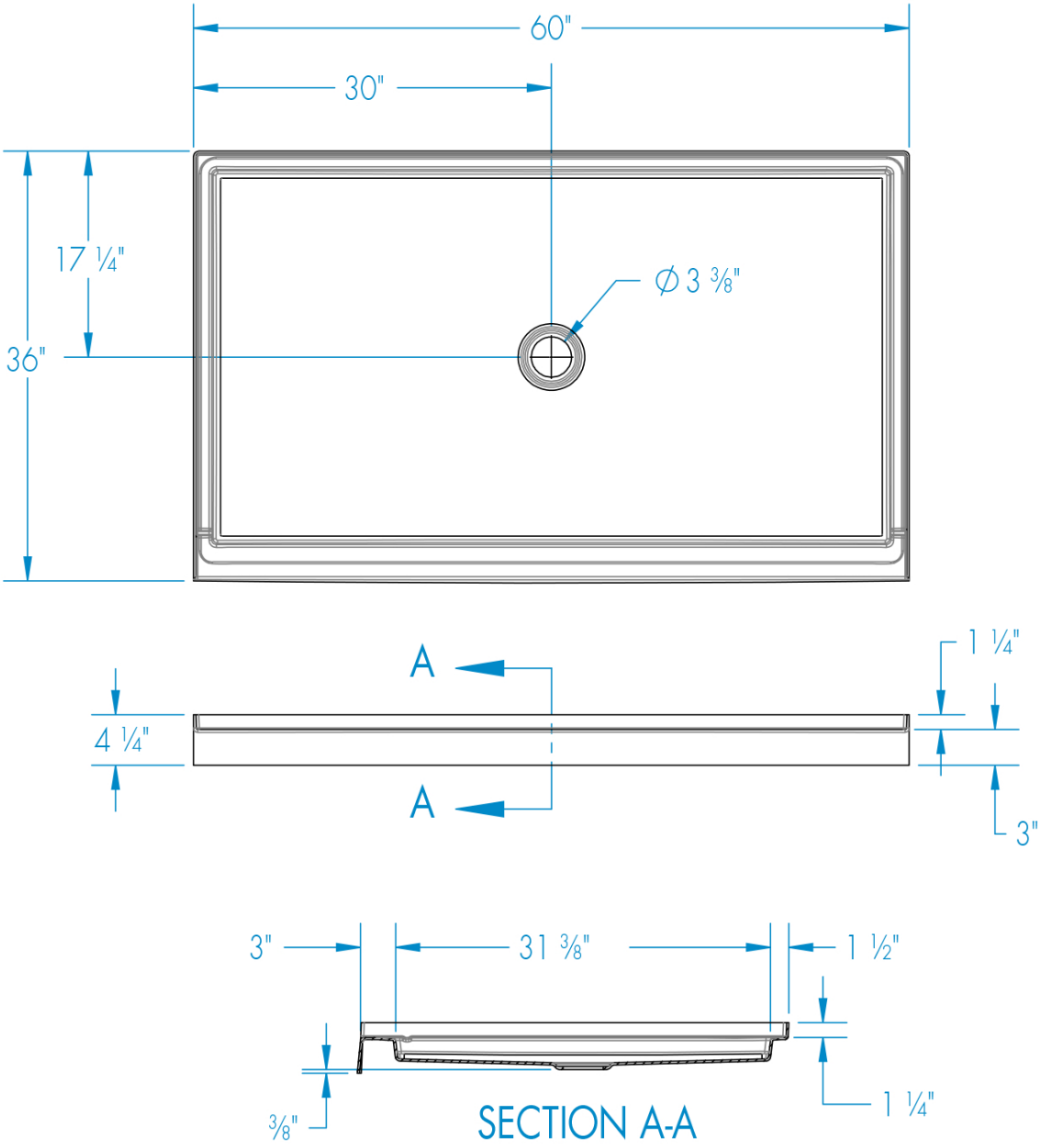
60"
30"
17 ¼"
36"
Ø 3 ⅜"
A
A
4 ¼"
1 ¼"
3"
3"
31 ⅜"
1 ½"
⅜"
1 ¼"
SECTION A-A

Icon SB6036L/R





Material : AcrylX™

Features

- Shower base
- Slip-resistant, textured floor for safety
- Left or right hand drain
- Low 3 Inch threshold
- Integrated weep holes
- Sloped threshold ensures water containment
- Pre-leveled legs, no mortar bed required
- Sleek minimalist design
- AcrlyX™ applied acrylic surface

ICON SB6036L/R - PRICING CATEGORY : EK

SKU	Color	Configuration	Dimensions & Weight	MSRP
SB6036L-BI	Biscuit	Left-hand Drain / Alcove	60” x 36” x 4 1/4” / 77 lb 1524mm x 914mm x 108mm / 34.92 kg	$ 704
SB6036L-BO	Bone			$ 704
SB6036L-WH	White			$ 669
SB6036R-BI	Biscuit	Right-hand Drain / Alcove		$ 704
SB6036R-BO	Bone			$ 704
SB6036R-WH	White			$ 669

OPTIONS

SKU	Description	MSRP
4200BRASDRSF	2” Brass Surefit Joint Shower Drain Brass drain material Snap in strainer-stainless steel No-caulk connection.	$ 48

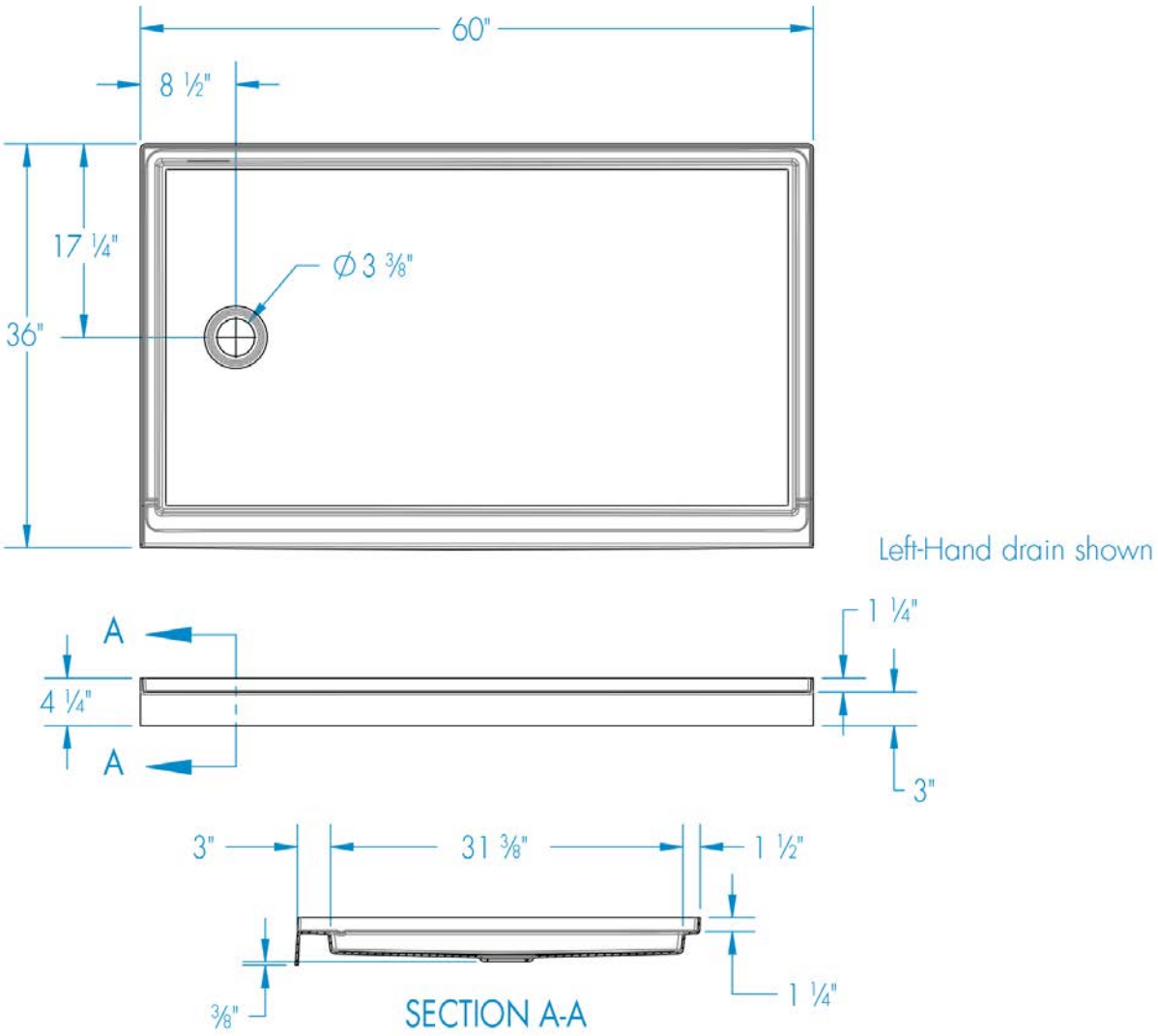
60"
8 ½"
17 ¼"
36"
Ø 3 ⅜"
Left-Hand drain shown
A
4 ¼"
A
1 ¼"
3"
3"
31 ⅜"
1 ½"
1 ¼"
⅜"
SECTION A-A

Icon SB6042





Material : AcrylX™

Features

- Shower base
- Slip-resistant, textured floor for safety
- Center drain
- Low 3 Inch threshold
- Integrated weep holes
- Sloped threshold ensures water containment
- Pre-leveled legs, no mortar bed required
- Sleek minimalist design/li>
- AcrlyX™ applied acrylic surface

ICON SB6042 - PRICING CATEGORY : EK

SKU	Color	Configuration	Dimensions & Weight	MSRP
SB6042-BI	Biscuit	Center Drain / Alcove	60” x 42” x 4 1/4” / 88 lb 1524mm x 1067mm x 108mm / 39.91 kg	$ 772
SB6042-BO	Bone			$ 772
SB6042-WH	White			$ 737

OPTIONS

SKU	Description	MSRP
4200BRASDRSF	2” Brass Surefit Joint Shower Drain Brass drain material Snap in strainer-stainless steel No-caulk connection.	$ 48

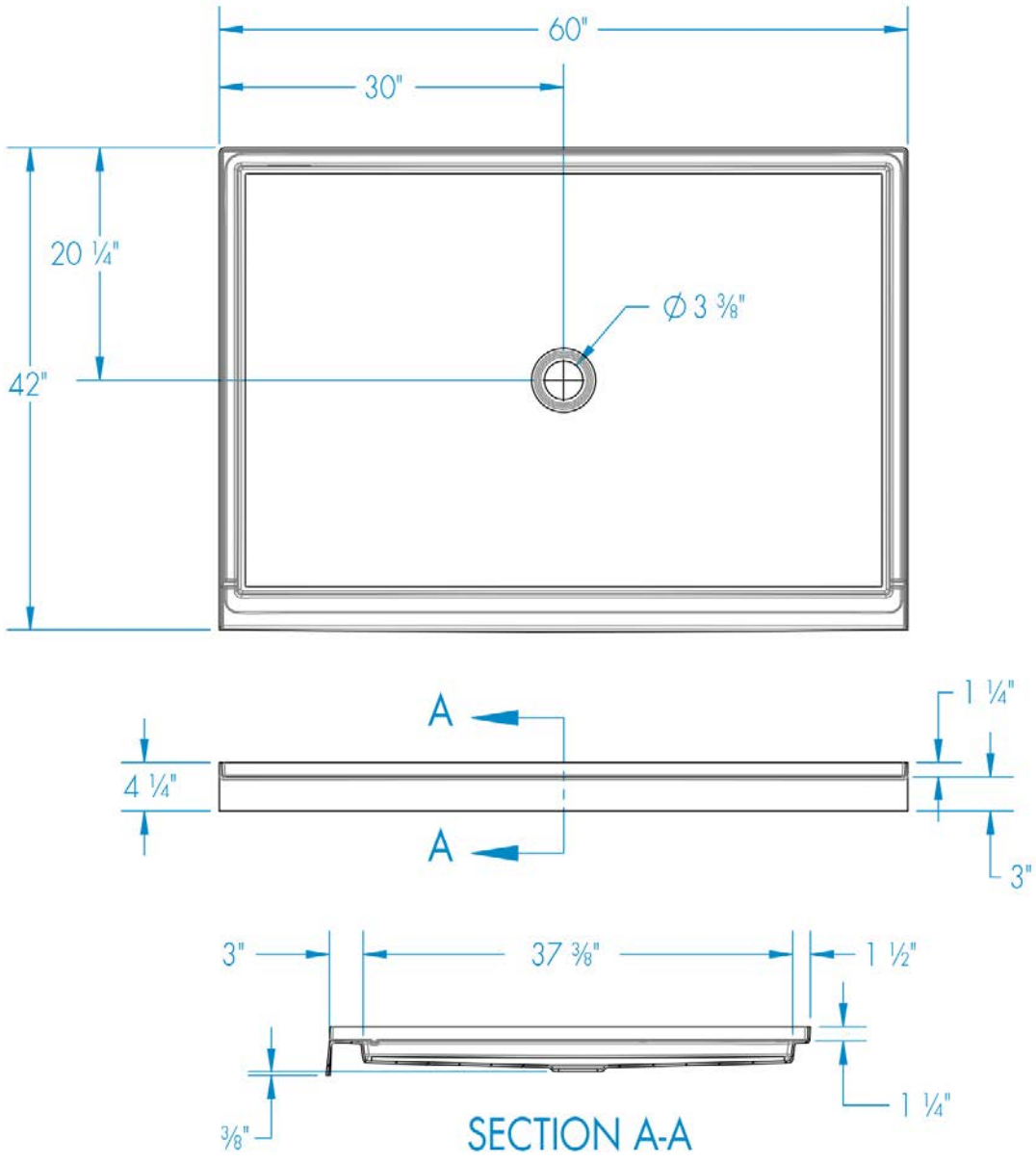
60"
30"
20 ¼"
42"
Ø 3 ⅜"
A
A
4 ¼"
1 ¼"
3"
3"
37 ⅜"
1 ½"
⅜"
1 ¼"
SECTION A-A

Icon SB7236





Material : AcrylX™

Features

- Shower base
- Slip-resistant, textured floor for safety
- Center drain
- Low 3 Inch threshold
- Integrated weep holes
- Sloped threshold ensures water containment
- Pre-leveled legs, no mortar bed required
- Sleek minimalist design/li>
- AcrlyX™ applied acrylic surface

ICON SB7236 - PRICING CATEGORY : EK

SKU	Color	Configuration	Dimensions & Weight	MSRP
SB7236-BI	Biscuit	Center Drain / Alcove	72” x 36” x 4 1/4” / 91 lb 1829mm x 914mm x 108mm / 41.27 kg	$ 954
SB7236-BO	Bone			$ 954
SB7236-WH	White			$ 919

OPTIONS

SKU	Description	MSRP
4200BRASDRSF	2” Brass Surefit Joint Shower Drain Brass drain material Snap in strainer-stainless steel No-caulk connection.	$ 48

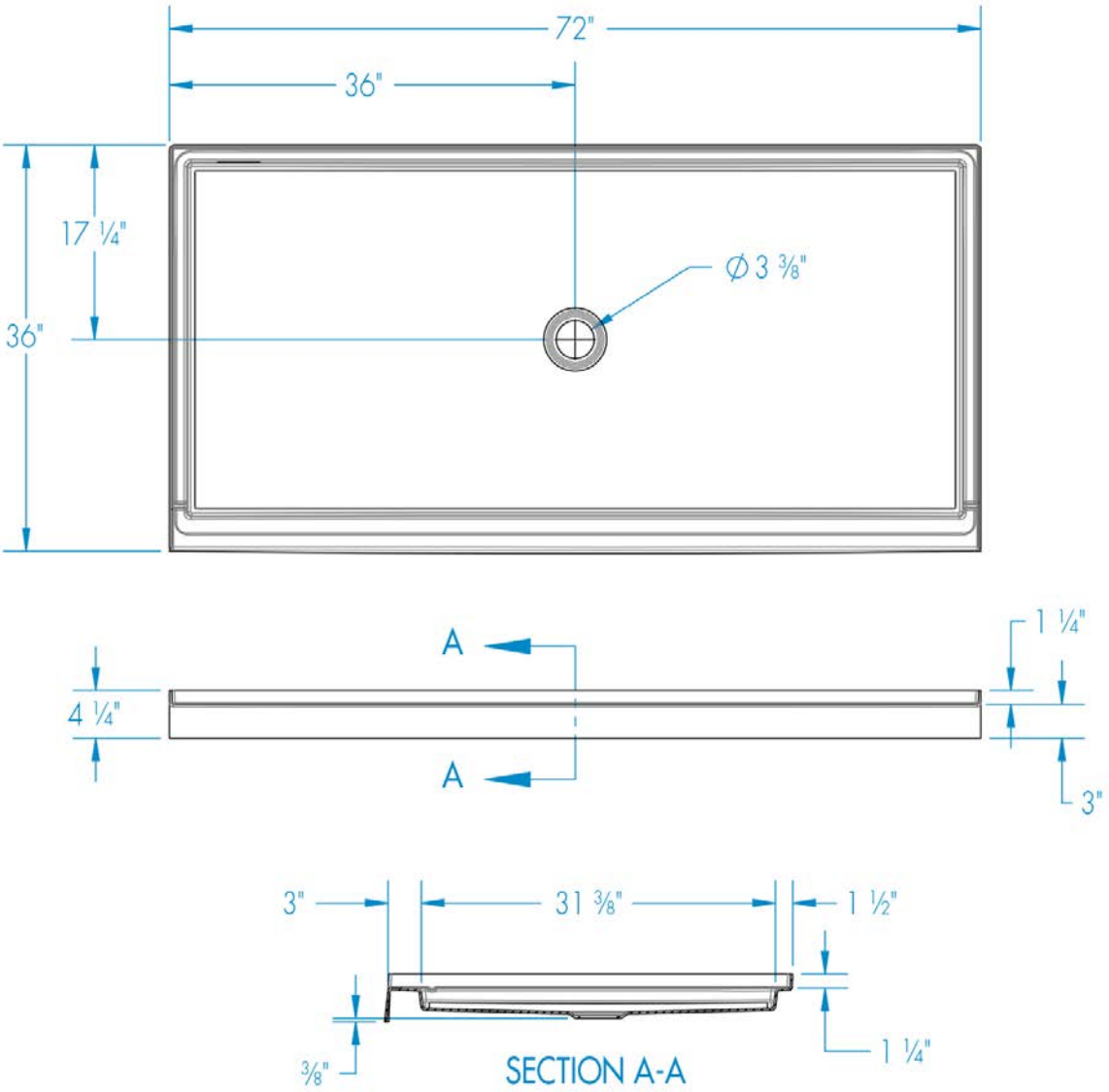
72"
36"
17 ¼"
36"
Ø 3 ⅜"
A
A
4 ¼"
1 ¼"
3"
3"
31 ⅜"
1 ½"
⅜"
1 ¼"
SECTION A-A

Icon SB7248





Material : AcrylX™

Features

- Shower base
- Slip-resistant, textured floor for safety
- Center drain
- Low 3 Inch threshold
- Integrated weep holes
- Sloped threshold ensures water containment
- Pre-leveled legs, no mortar bed required
- Sleek minimalist design/li>
- AcrlyX™ applied acrylic surface

ICON SB7248 - PRICING CATEGORY : EK

SKU	Color	Configuration	Dimensions & Weight	MSRP
SB7248-BI	Biscuit	Center Drain / Alcove	72” x 48” x 4 1/4” / 119 lb 1829mm x 1219mm x 108mm / 53.97 kg	$ 1038
SB7248-BO	Bone			$ 1038
SB7248-WH	White			$ 1003

OPTIONS

SKU	Description	MSRP
4200BRASDRSF	2” Brass Surefit Joint Shower Drain Brass drain material Snap in strainer-stainless steel No-caulk connection.	$ 48

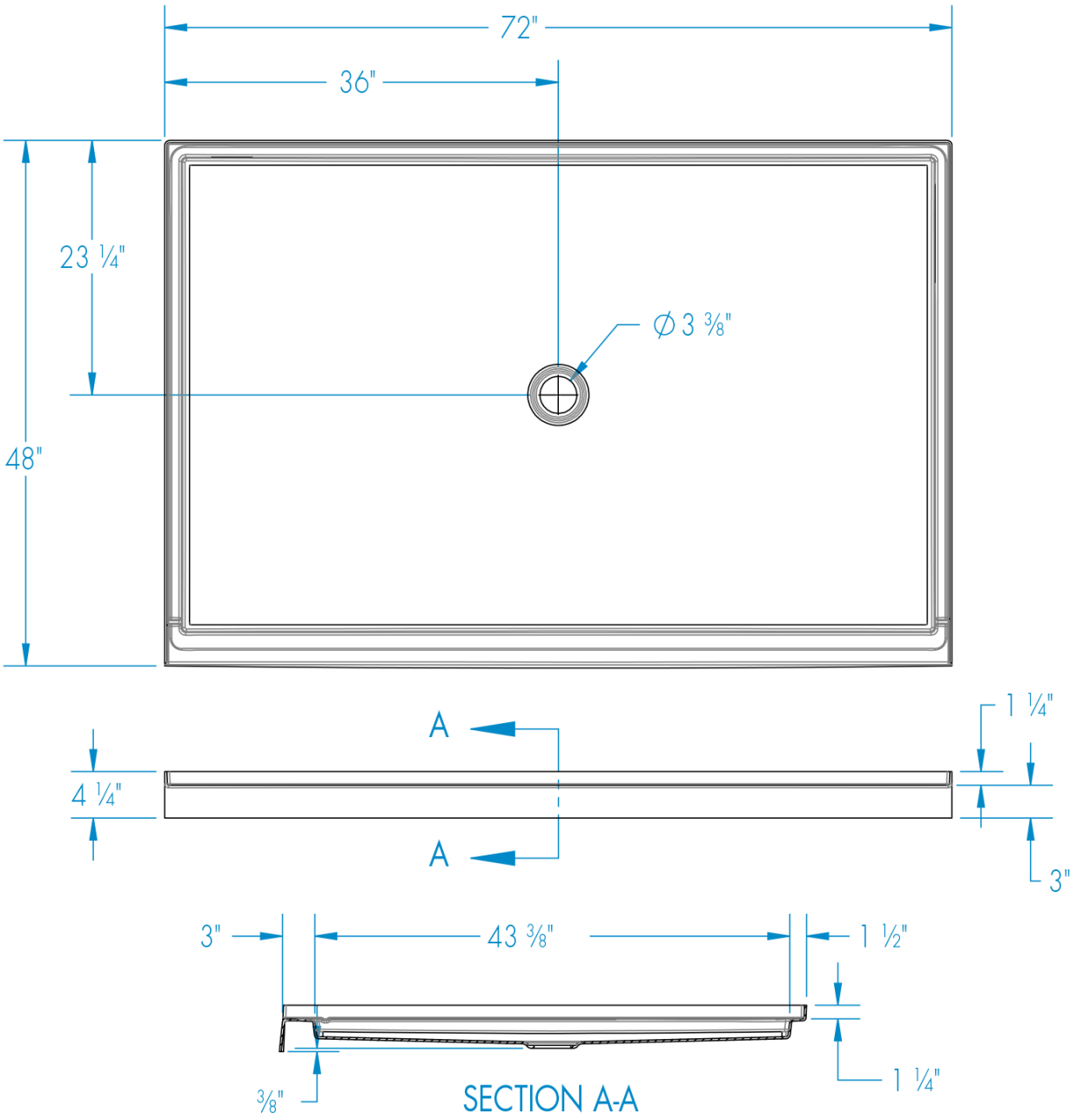
72"
36"
23 ¼"
48"
Ø 3 ⅜"
A
A
4 ¼"
1 ¼"
3"
3"
43 ⅜"
1 ½"
1 ¼"
⅜"
SECTION A-A

13232P





Material : AcrylX™

Features

- 2-piece shower
- Smooth wall is easy to clean
- Molded toiletry shelf
- Space-saving design (Not listed by IAPMO or FHA)
- Requires 47 Inch turning space
- Center drain
- AcrylX™ applied acrylic surface

13232P - PRICING CATEGORY : ER

SKU	Color	Configuration	Dimensions & Weight	MSRP
13232P-AL	Almond	Center Drain	32” x 32” x 72 3/4” / 91 lb 813mm x 813mm x 1848mm / 41.27 kg	$ 1088
13232P-BI	Biscuit			$ 1088
13232P-BK	Black			$ 1408
13232P-BO	Bone			$ 1088
13232P-LN	Linen			$ 1088
13232P-ME	Mexican Sand			$ 1408
13232P-SD	Sandbar			$ 1408
13232P-ST	Sterling Silver			$ 1408
13232P-WH	White			$ 1053

OPTIONS

SKU	Description	MSRP
4200BRASDRSF	2” Brass Surefit Joint Shower Drain Brass drain material Snap in strainer-stainless steel No-caulk connection.	$ 48
30UPLT	Extra reinforcement for after market accessories installment. Order per wall Reinforcement is applied 30 inches and up **ONLY**,	$ 63
30UPRT	Extra reinforcement for after market accessories installment. Order per wall Reinforcement is applied 30 inches and up **ONLY**,	$ 63
30UPBK		$ 63

OPTIONS

SKU	Description	MSRP
FLATLT	Extra reinforcement for after market accessories installment. Order per wall Reinforcement is applied to flat surface areas.	$ 81
FLATRT	Extra reinforcement for after market accessories installment Order per wall Reinforcement is applied to flat surface areas.	$ 81
FLATBK	Extra reinforcement for after market accessories installment. Order per wall Reinforcement is applied to flat surface areas.	$ 81
SC	Ultra strong honeycomb reinforcement for demanding applications that require additional strength	$ 101
35RKBO	Finish repair kit - Case of 12 Available in White **(WH)**, or Bone **(BO)**,	$ 303
35RKWH		$ 303

FOOTNOTES

No	Description
TM	

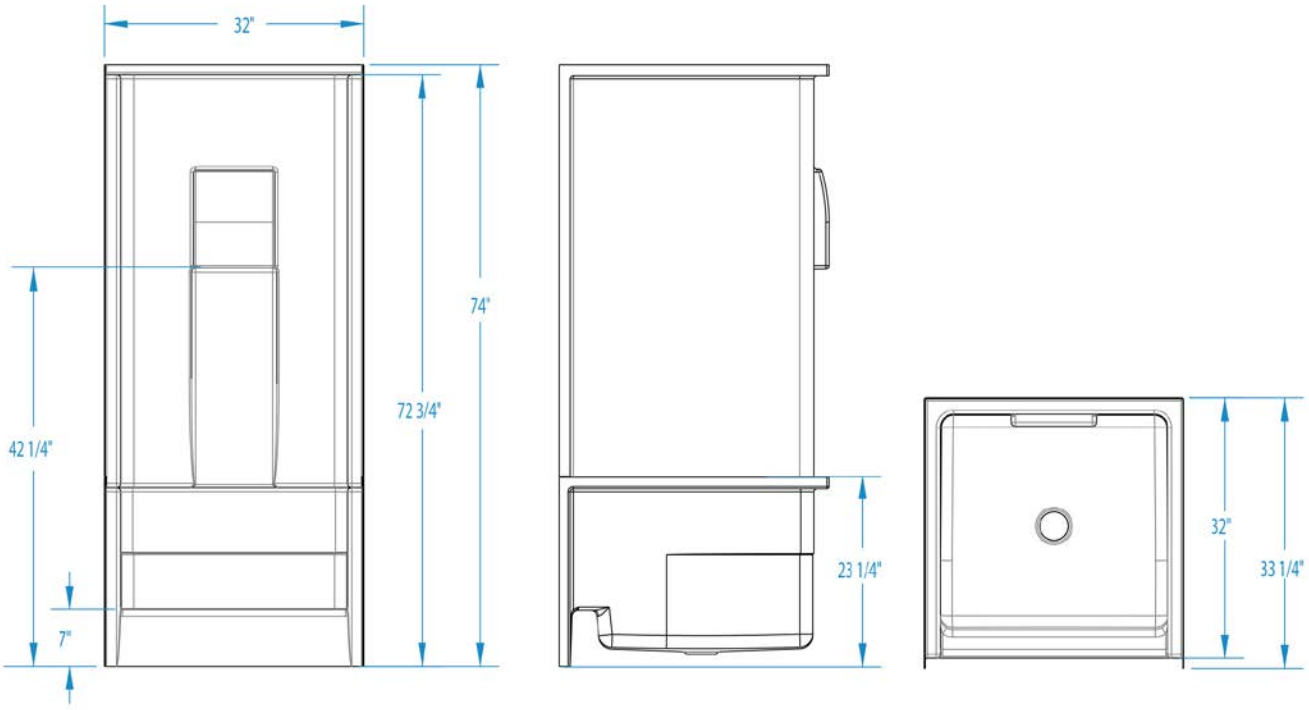
32"
74"
72 3/4"
42 1/4"
7"
23 1/4"
32"
33 1/4"

1323C



Material : AcrylX™

Features

- 1-Piece shower
- Smooth wall finish is easy to clean
- Molded toiletry shelves
- Space saving design (Not listed by IAPMO or FHA)
- Slip-resistant textured floor for safety
- Center drain

1323C - PRICING CATEGORY : EF

SKU	Color	Configuration	Dimensions & Weight	MSRP
1323C-AL	Almond	Center Drain	32” x 32” x 72” / 81 lb 813mm x 813mm x 1829mm / 36.73 kg	$ 1025
1323C-BI	Biscuit			$ 1025
1323C-BK	Black			$ 1345
1323C-BO	Bone			$ 1025
1323C-LN	Linen			$ 1025
1323C-ME	Mexican Sand			$ 1345
1323C-SD	Sandbar			$ 1345
1323C-ST	Sterling Silver			$ 1345
1323C-WH	White			$ 990

OPTIONS

SKU	Description	MSRP
4200BRASDRSF	2” Brass Surefit Joint Shower Drain Brass drain material Snap in strainer-stainless steel No-caulk connection.	$ 48
30UPLT	Extra reinforcement for after market accessories installment. Order per wall Reinforcement is applied 30 inches and up **ONLY**,	$ 63
30UPRT	Extra reinforcement for after market accessories installment. Order per wall Reinforcement is applied 30 inches and up **ONLY**,	$ 63
30UPBK		$ 63

OPTIONS

SKU	Description	MSRP
FLATLT	Extra reinforcement for after market accessories installment. Order per wall Reinforcement is applied to flat surface areas.	$ 81
FLATRT	Extra reinforcement for after market accessories installment Order per wall Reinforcement is applied to flat surface areas.	$ 81
FLATBK	Extra reinforcement for after market accessories installment. Order per wall Reinforcement is applied to flat surface areas.	$ 81
35RKBO	Finish repair kit - Case of 12 Available in White **(WH)**, or Bone **(BO)**,	$ 303
35RKWH		$ 303

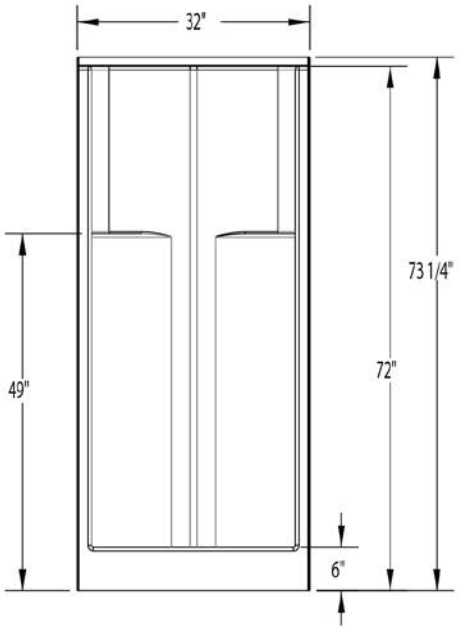
32"
73 1/4"
72"
49"
6"

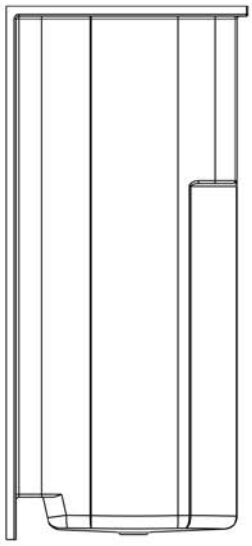

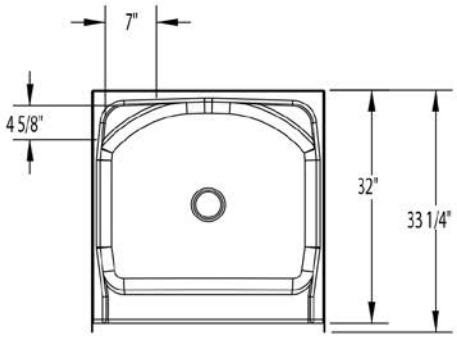
7"
4 5/8"
32"
33 1/4"

1323CM AFR





Material : AcrylX™

Features

- 1-Piece shower
- Smooth wall finish is easy to clean
- Molded toiletry shelves
- Space saving design (Not listed by IAPMO or FHA)
- This AFR unit accommodates the installation of drain above the floor
- Slip-resistant textured floor for safety
- Center drain

1323CM AFR - PRICING CATEGORY : EF

SKU	Color	Configuration	Dimensions & Weight	MSRP
1323CM-AL	Almond	Center Drain	32” x 32” x 75” / 83 lb 813mm x 813mm x 1905mm / 37.64 kg	$ 1094
1323CM-BI	Biscuit			$ 1094
1323CM-BK	Black			$ 1414
1323CM-BO	Bone			$ 1094
1323CM-LN	Linen			$ 1094
1323CM-ME	Mexican Sand			$ 1414
1323CM-SD	Sandbar			$ 1414
1323CM-ST	Sterling Silver			$ 1414
1323CM-WH	White			$ 1059

OPTIONS

SKU	Description	MSRP
30UPLT	Extra reinforcement for after market accessories installment. Order per wall Reinforcement is applied 30 inches and up **ONLY**,	$ 63
30UPRT	Extra reinforcement for after market accessories installment. Order per wall Reinforcement is applied 30 inches and up **ONLY**,	$ 63
30UPBK	Extra reinforcement for after market accessories installment. Order per wall Reinforcement is applied 30 inches and up **ONLY**,	$ 63
FLATLT	Extra reinforcement for after market accessories installment. Order per wall Reinforcement is applied to flat surface areas.	$ 81

OPTIONS

SKU	Description	MSRP
FLATRT	Extra reinforcement for after market accessories installment Order per wall Reinforcement is applied to flat surface areas.	$ 81
FLATBK	Extra reinforcement for after market accessories installment. Order per wall Reinforcement is applied to flat surface areas.	$ 81
35RKBO	Finish repair kit - Case of 12 Available in White **(WH)**, or Bone **(BO)**,	$ 303
35RKWH		$ 303

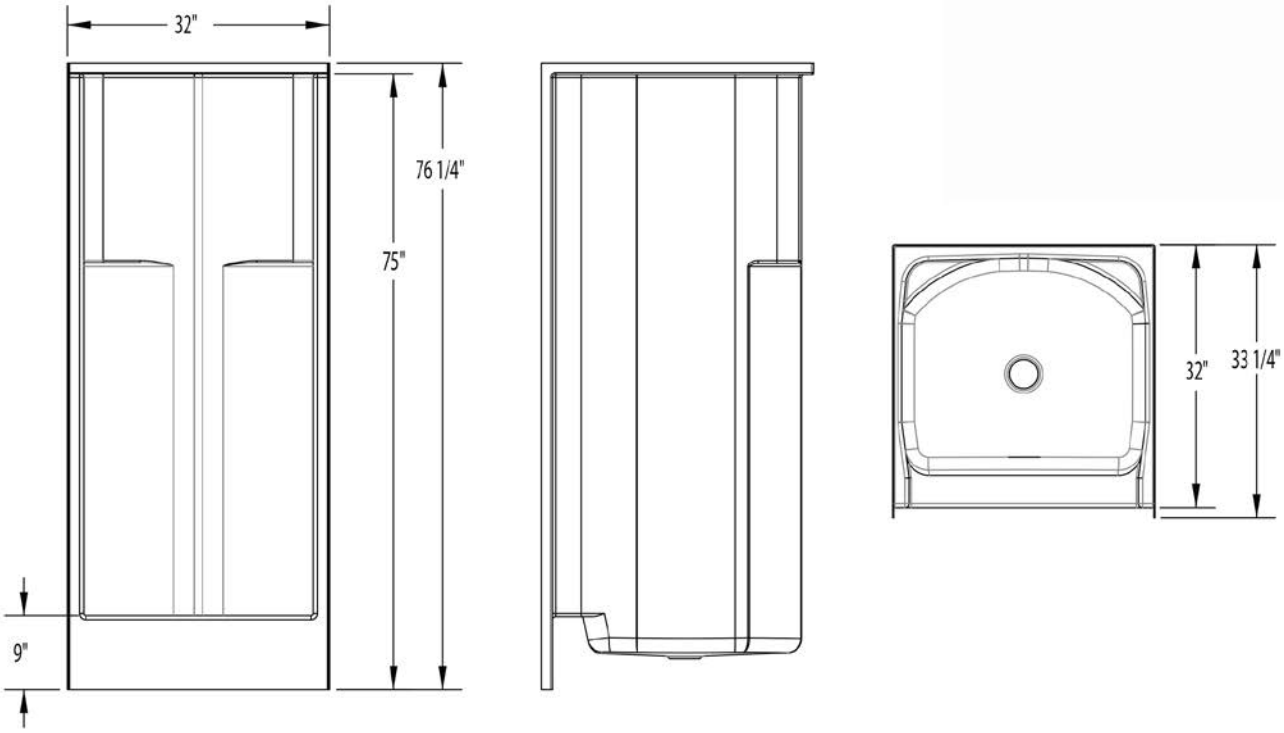
32"
76 1/4"
75"
9"
32"
33 1/4"

13632P



Material : AcrylX™

Features

- 2-piece shower
- Smooth wall is easy to clean
- Molded toiletry shelf
- Requires 52 Inch turning space
- Center drain
- AcrylX™ applied acrylic surface

13632P - PRICING CATEGORY : ER

SKU	Color	Configuration	Dimensions & Weight	MSRP
13632P-AL	Almond	Center Drain	36” x 36” x 72” / 102 lb 914mm x 914mm x 1829mm / 46.26 kg	$ 1229
13632P-BI	Biscuit			$ 1229
13632P-BK	Black			$ 1549
13632P-BO	Bone			$ 1229
13632P-LN	Linen			$ 1229
13632P-ME	Mexican Sand			$ 1549
13632P-SD	Sandbar			$ 1549
13632P-ST	Sterling Silver			$ 1549
13632P-WH	White			$ 1194

OPTIONS

SKU	Description	MSRP
4200BRASDRSF	2” Brass Surefit Joint Shower Drain Brass drain material Snap in strainer-stainless steel No-caulk connection.	$ 48
30UPLT	Extra reinforcement for after market accessories installment. Order per wall Reinforcement is applied 30 inches and up **ONLY**,	$ 63
30UPRT	Extra reinforcement for after market accessories installment. Order per wall Reinforcement is applied 30 inches and up **ONLY**,	$ 63
30UPBK		$ 63

OPTIONS

SKU	Description	MSRP
FLATLT	Extra reinforcement for after market accessories installment. Order per wall Reinforcement is applied to flat surface areas.	$ 81
FLATRT	Extra reinforcement for after market accessories installment Order per wall Reinforcement is applied to flat surface areas.	$ 81
FLATBK	Extra reinforcement for after market accessories installment. Order per wall Reinforcement is applied to flat surface areas.	$ 81
SC	Ultra strong honeycomb reinforcement for demanding applications that require additional strength	$ 101
35RKBO	Finish repair kit - Case of 12 Available in White **(WH)**, or Bone **(BO)**,	$ 303
35RKWH		$ 303

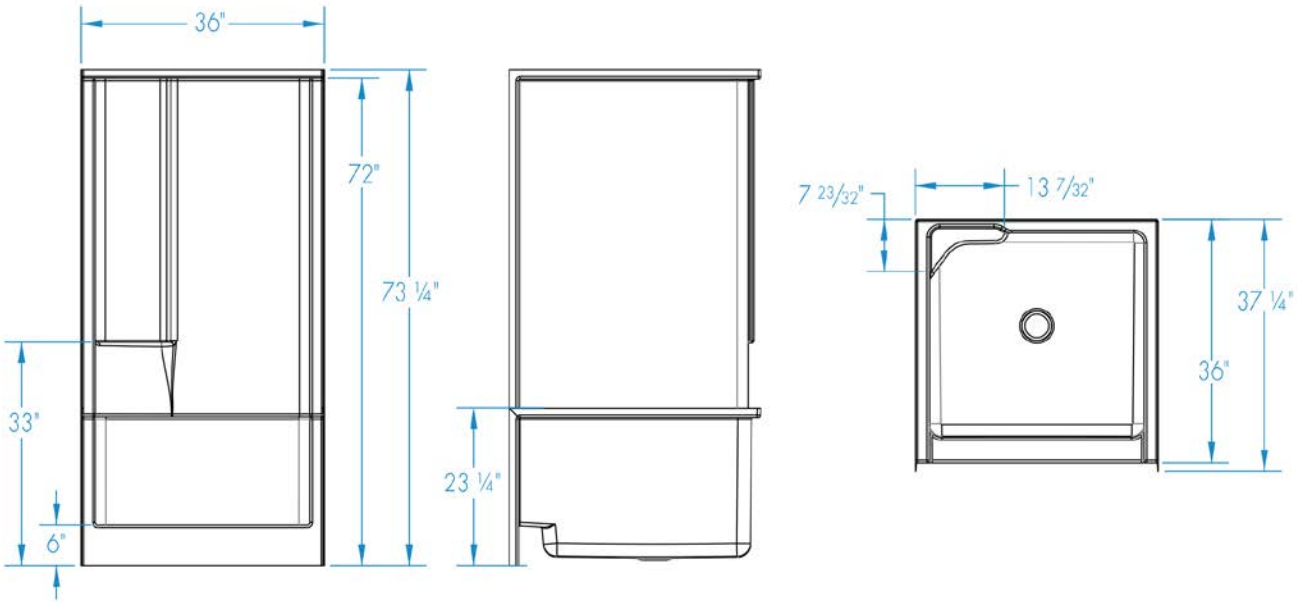
36"
72"
73 ¼"
33"
6"
23 ¼"
7 23/32"
13 7/32"
37 ¼"
36"

136364PC





Material : AcrylX™

Features

- 4-piece shower
- Smooth wall is easy to clean
- Molded toiletry shelves
- Unit is ANSI Z124 and IPC compliant, but not UPC compliant for floor space. Please check state and local code for your area
- Center drain
- AcrylX™ applied acrylic surface

136364PC - PRICING CATEGORY : ER

SKU	Color	Configuration	Dimensions & Weight	MSRP
136364PC-AL	Almond	Center Drain	36” x 36” x 76” / 136 lb 914mm x 914mm x 1930mm / 61.68 kg	$ 1612
136364PC-BI	Biscuit			$ 1612
136364PC-BK	Black			$ 1932
136364PC-BO	Bone			$ 1612
136364PC-LN	Linen			$ 1612
136364PC-ME	Mexican Sand			$ 1932
136364PC-SD	Sandbar			$ 1932
136364PC-ST	Sterling Silver			$ 1932
136364PC-WH	White			$ 1577

OPTIONS

SKU	Description	MSRP
4200BRASDRSF	2” Brass Surefit Joint Shower Drain Brass drain material Snap in strainer-stainless steel No-caulk connection.	$ 48
30UPLT	Extra reinforcement for after market accessories installment. Order per wall Reinforcement is applied 30 inches and up **ONLY**,	$ 63
30UPRT	Extra reinforcement for after market accessories installment. Order per wall Reinforcement is applied 30 inches and up **ONLY**,	$ 63
30UPBK		$ 63

OPTIONS

SKU	Description	MSRP
FLATLT	Extra reinforcement for after market accessories installment. Order per wall Reinforcement is applied to flat surface areas.	$ 81
FLATRT	Extra reinforcement for after market accessories installment Order per wall Reinforcement is applied to flat surface areas.	$ 81
FLATBK	Extra reinforcement for after market accessories installment. Order per wall Reinforcement is applied to flat surface areas.	$ 81
SC	Ultra strong honeycomb reinforcement for demanding applications that require additional strength	$ 101
35RKBO	Finish repair kit - Case of 12 Available in White **(WH)**, or Bone **(BO)**,	$ 303
35RKWH		$ 303

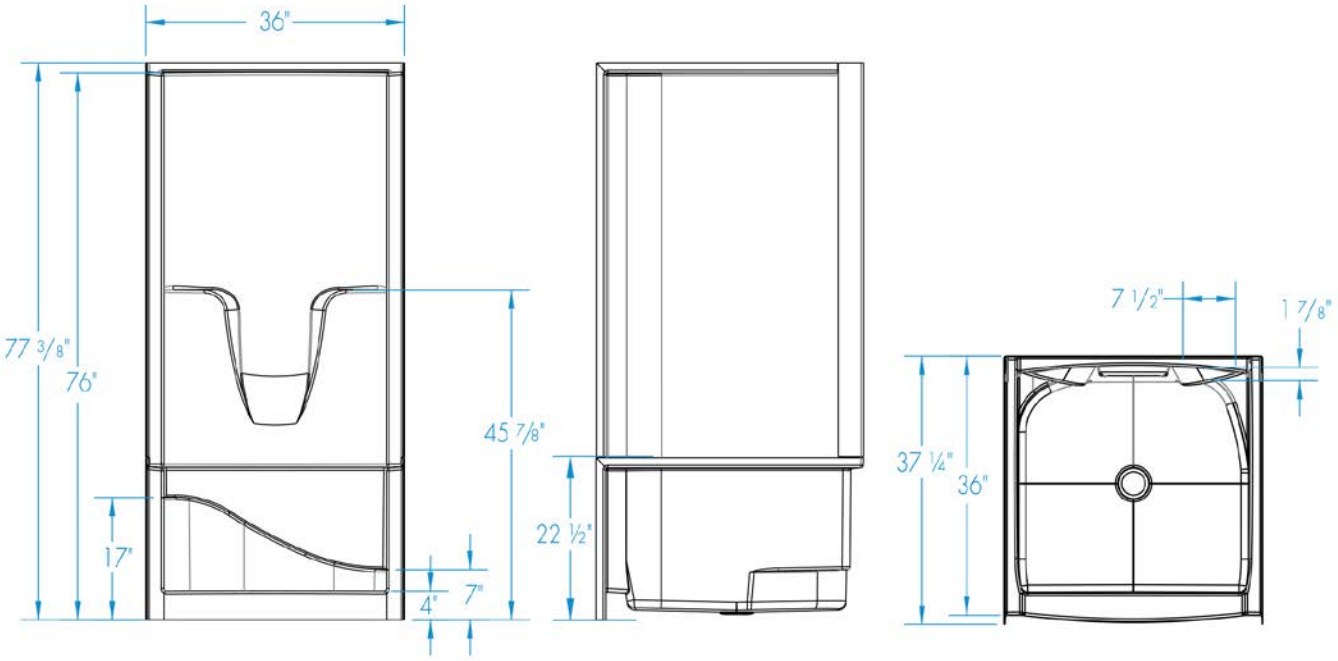
36"
77 3/8"
76"
17"
45 7/8"
4"
7"
22 1/2"
7 1/2"
1 7/8"
37 1/4"
36"

13636STT



Material : AcrylX™

Features

- 1-Piece shower stall
- Simulated subway tile wall design is easy to clean with no messy grout line
- Molded toiletry shelves
- Unit is ANSI Z124 and IPC compliant, but not UPC compliant for floor space. Please check state and local code for your area.
- Center drain
- AcrylX™ applied acrylic surface

13636STT - PRICING CATEGORY : EK

SKU	Color	Configuration	Dimensions & Weight	MSRP
13636STT-AL	Almond	Center Drain	36” x 36” x 80” / 97 lb 914mm x 914mm x 2032mm / 43.99 kg	$ 1088
13636STT-BI	Biscuit			$ 1088
13636STT-BK	Black			$ 1408
13636STT-BO	Bone			$ 1088
13636STT-LN	Linen			$ 1088
13636STT-ME	Mexican Sand			$ 1408
13636STT-SD	Sandbar			$ 1408
13636STT-ST	Sterling Silver			$ 1408
13636STT-WH	White			$ 1053

OPTIONS

SKU	Description	MSRP
4200BRASDRSF	2” Brass Surefit Joint Shower Drain Brass drain material Snap in strainer-stainless steel No-caulk connection.	$ 48
30UPLT	Extra reinforcement for after market accessories installment. Order per wall Reinforcement is applied 30 inches and up **ONLY**,	$ 63
30UPRT	Extra reinforcement for after market accessories installment. Order per wall Reinforcement is applied 30 inches and up **ONLY**,	$ 63
30UPBK		$ 63

OPTIONS

SKU	Description	MSRP
FLATLT	Extra reinforcement for after market accessories installment. Order per wall Reinforcement is applied to flat surface areas.	$ 81
FLATRT	Extra reinforcement for after market accessories installment Order per wall Reinforcement is applied to flat surface areas.	$ 81
FLATBK	Extra reinforcement for after market accessories installment. Order per wall Reinforcement is applied to flat surface areas.	$ 81
SC	Ultra strong honeycomb reinforcement for demanding applications that require additional strength	$ 101
35RKBO	Finish repair kit - Case of 12 Available in White **(WH)**, or Bone **(BO)**,	$ 303
35RKWH		$ 303

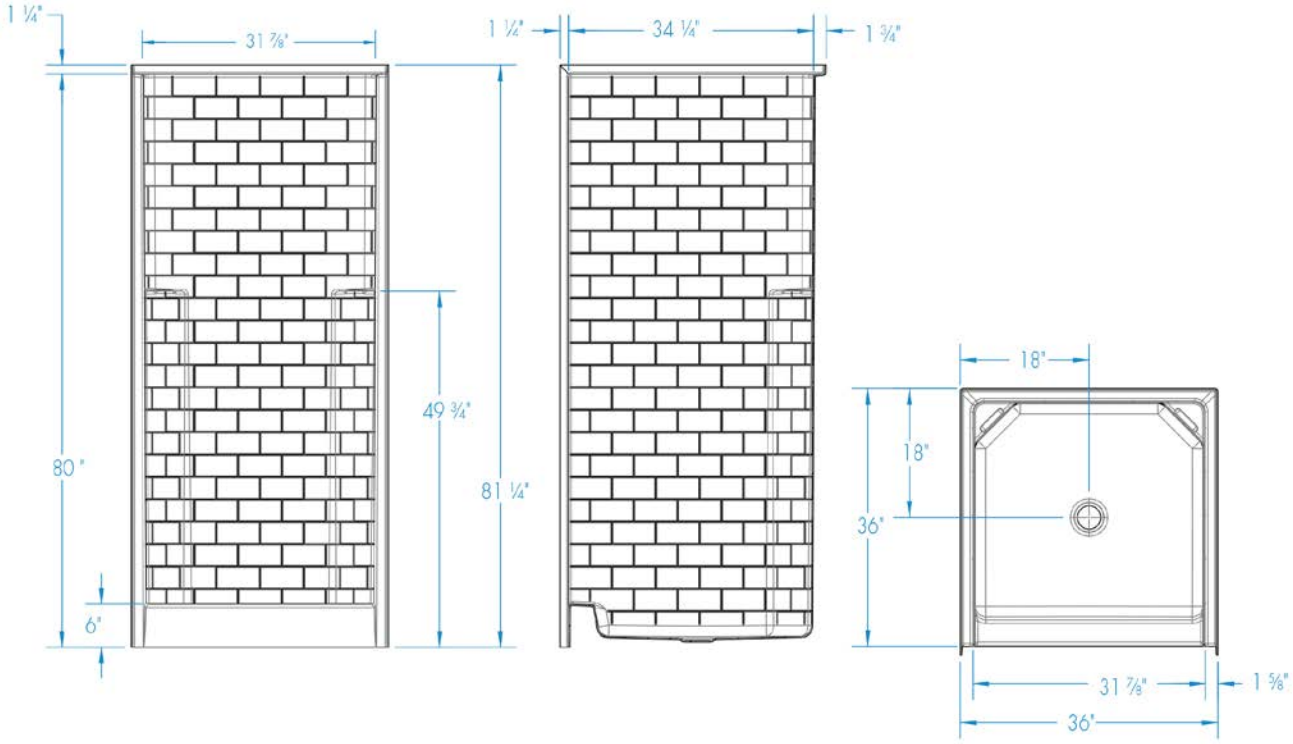
1 ¼"
31 ⅞"
1 ½"
34 ¼"
1 ¾"
80 "
49 ¾"
81 ¼"
6"
18"
18"
36"
31 ⅞"
1 ⅝"
36"

1363C





Material : AcrylX™

Features

- 1-Piece shower
- Smooth wall finish is easy to clean
- Molded toiletry shelves
- Slip-resistant textured floor for safety
- Center drain
- AcrylX™ applied acrylic surface

1363C - PRICING CATEGORY : EF

SKU	Color	Configuration	Dimensions & Weight	MSRP
1363C-BI	Biscuit	Center Drain	36” x 36” x 72” / 93 lb 914mm x 914mm x 1829mm / 42.18 kg	$ 1124
1363C-BK	Black			$ 1444
1363C-BO	Almond			$ 1124
1363C-LN	Linen			$ 1124
1363C-ME	Mexican Sand			$ 1444
1363C-SD	Sandbar			$ 1444
1363C-ST	Sterling Silver			$ 1444
1363C-WH	White			$ 1089

OPTIONS

SKU	Description	MSRP
4200BRASDRSF	2” Brass Surefit Joint Shower Drain Brass drain material Snap in strainer-stainless steel No-caulk connection.	$ 48
30UPLT	Extra reinforcement for after market accessories installment. Order per wall Reinforcement is applied 30 inches and up **ONLY**,	$ 63
30UPRT	Extra reinforcement for after market accessories installment. Order per wall Reinforcement is applied 30 inches and up **ONLY**,	$ 63
30UPBK		$ 63
FLATLT	Extra reinforcement for after market accessories installment. Order per wall Reinforcement is applied to flat surface areas.	$ 81

OPTIONS

SKU	Description	MSRP
FLATRT	Extra reinforcement for after market accessories installment Order per wall Reinforcement is applied to flat surface areas.	$ 81
FLATBK	Extra reinforcement for after market accessories installment. Order per wall Reinforcement is applied to flat surface areas.	$ 81
35RKBO	Finish repair kit - Case of 12 Available in White **(WH)**, or Bone **(BO)**,	$ 303
35RKWH		$ 303

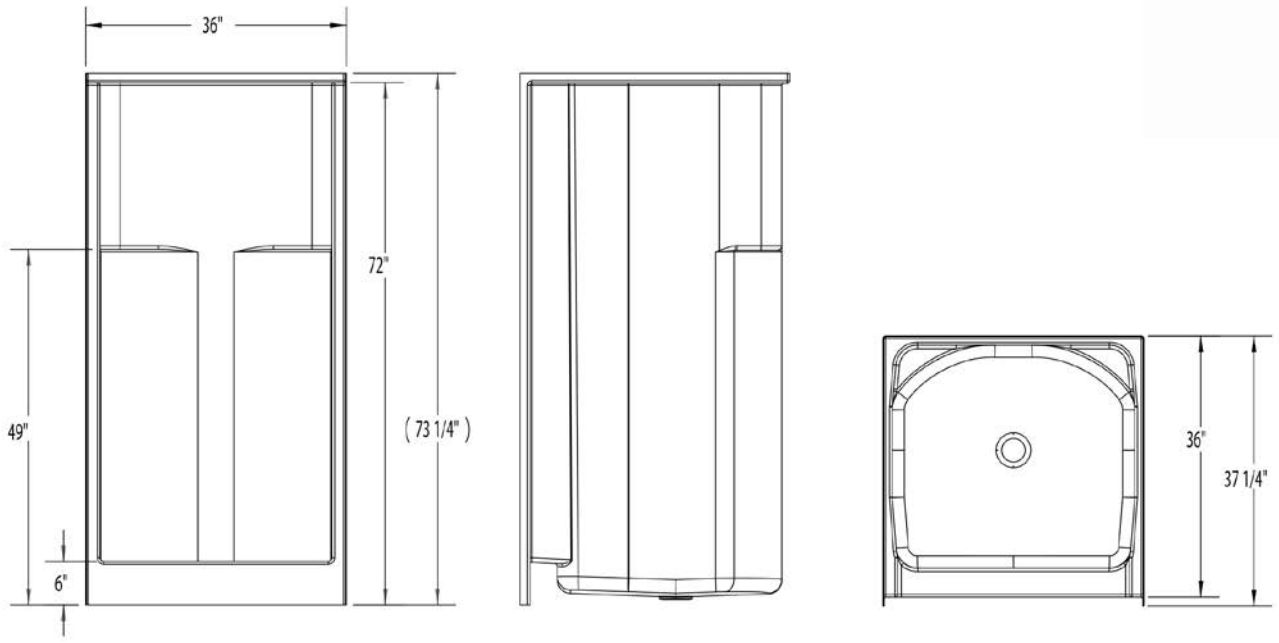
36"
72"
49"
(73 1/4")
6"
36"
37 1/4"

1363CM AFR





Material : AcrylX™

Features

- 1-Piece shower
- Smooth wall finish is easy to clean
- Molded toiletry shelves
- This AFR unit accommodates the installation of drain above the floor
- Slip-resistant textured floor for safety
- Center drain
- AcrylX™ applied acrylic surface

1363CM AFR - PRICING CATEGORY : EF

SKU	Color	Configuration	Dimensions & Weight	MSRP
1363CM-AL	Almond	Center Drain	36” x 36” x 75” / 94 lb 914mm x 914mm x 1905mm / 42.63 kg	$ 1181
1363CM-BI	Biscuit			$ 1181
1363CM-BK	Black			$ 1501
1363CM-BO	Bone			$ 1181
1363CM-LN	Linen			$ 1181
1363CM-ME	Mexican Sand			$ 1501
1363CM-SD	Sandbar			$ 1501
1363CM-ST	Sterling Silver			$ 1501
1363CM-WH	White			$ 1146

OPTIONS

SKU	Description	MSRP
30UPLT	Extra reinforcement for after market accessories installment. Order per wall Reinforcement is applied 30 inches and up **ONLY**,	$ 63
30UPRT	Extra reinforcement for after market accessories installment. Order per wall Reinforcement is applied 30 inches and up **ONLY**,	$ 63
30UPBK	Extra reinforcement for after market accessories installment. Order per wall Reinforcement is applied 30 inches and up **ONLY**,	$ 63
FLATLT	Extra reinforcement for after market accessories installment. Order per wall Reinforcement is applied to flat surface areas.	$ 81

OPTIONS

SKU	Description	MSRP
FLATRT	Extra reinforcement for after market accessories installment Order per wall Reinforcement is applied to flat surface areas.	$ 81
FLATBK	Extra reinforcement for after market accessories installment. Order per wall Reinforcement is applied to flat surface areas.	$ 81
35RKBO	Finish repair kit - Case of 12 Available in White **(WH)**, or Bone **(BO)**,	$ 303
35RKWH		$ 303

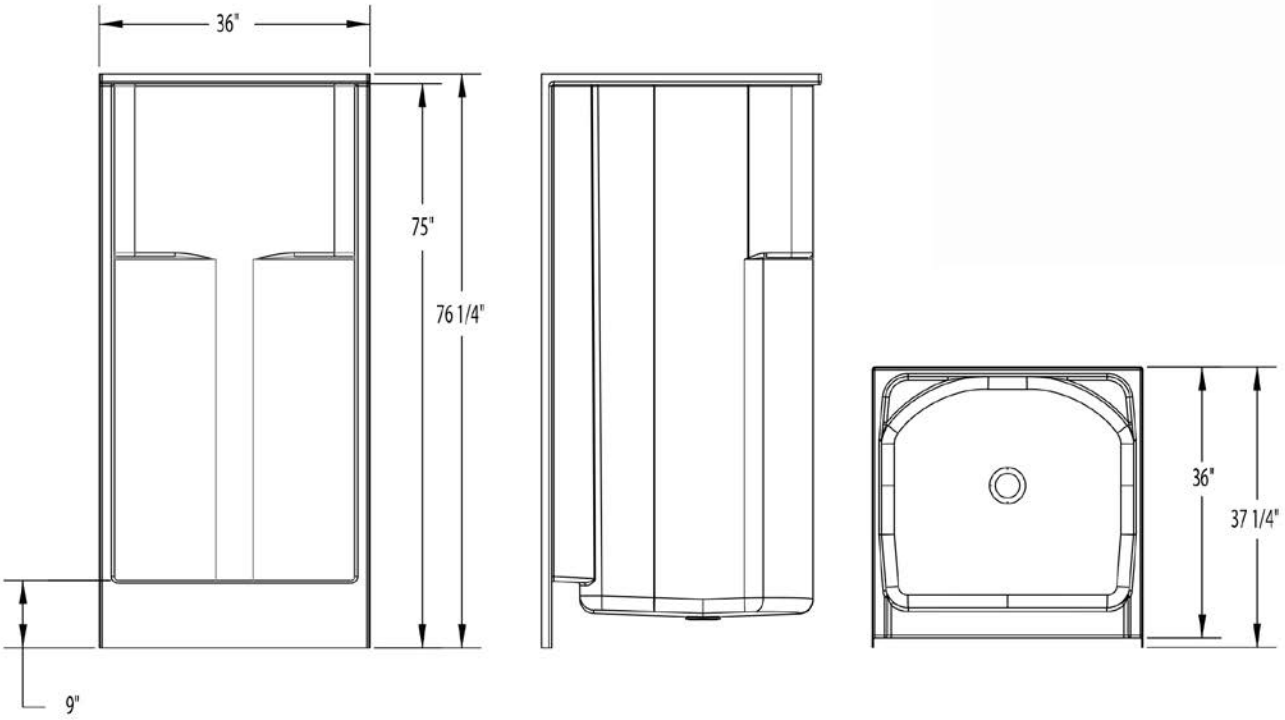
36"
75"
76 1/4"
9"
36"
37 1/4"

1363CT





Material : AcrylX™

Features

- 1-Piece shower stall
- Textured tile finish is easy to maintain is easy to clean, no messy grout lines
- Molded toiletry shelf
- Slip-resistant textured floor for safety
- Center drain
- AcrylX™ applied acrylic surface

1363CT - PRICING CATEGORY : EF

SKU	Color	Configuration	Dimensions & Weight	MSRP
1363CT-AL	Almond	Center Drain	36” x 36” x 72” / 91 lb 914mm x 914mm x 1829mm / 41.27 kg	$ 1130
1363CT-BI	Biscuit			$ 1130
1363CT-BK	Black			$ 1450
1363CT-BO	Bone			$ 1130
1363CT-LN	Linen			$ 1130
1363CT-ME	Mexican Sand			$ 1450
1363CT-SD	Sandbar			$ 1450
1363CT-ST	Sterling Silver			$ 1450
1363CT-WH	White			$ 1095

OPTIONS

SKU	Description	MSRP
4200BRASDRSF	2” Brass Surefit Joint Shower Drain Brass drain material Snap in strainer-stainless steel No-caulk connection.	$ 48
30UPLT	Extra reinforcement for after market accessories installment. Order per wall Reinforcement is applied 30 inches and up **ONLY**,	$ 63
30UPRT	Extra reinforcement for after market accessories installment. Order per wall Reinforcement is applied 30 inches and up **ONLY**,	$ 63
30UPBK		$ 63

OPTIONS

SKU	Description	MSRP
FLATLT	Extra reinforcement for after market accessories installment. Order per wall Reinforcement is applied to flat surface areas.	$ 81
FLATRT	Extra reinforcement for after market accessories installment Order per wall Reinforcement is applied to flat surface areas.	$ 81
FLATBK	Extra reinforcement for after market accessories installment. Order per wall Reinforcement is applied to flat surface areas.	$ 81
SC	Ultra strong honeycomb reinforcement for demanding applications that require additional strength	$ 101
35RKBO	Finish repair kit - Case of 12 Available in White **(WH)**, or Bone **(BO)**,	$ 303
35RKWH		$ 303

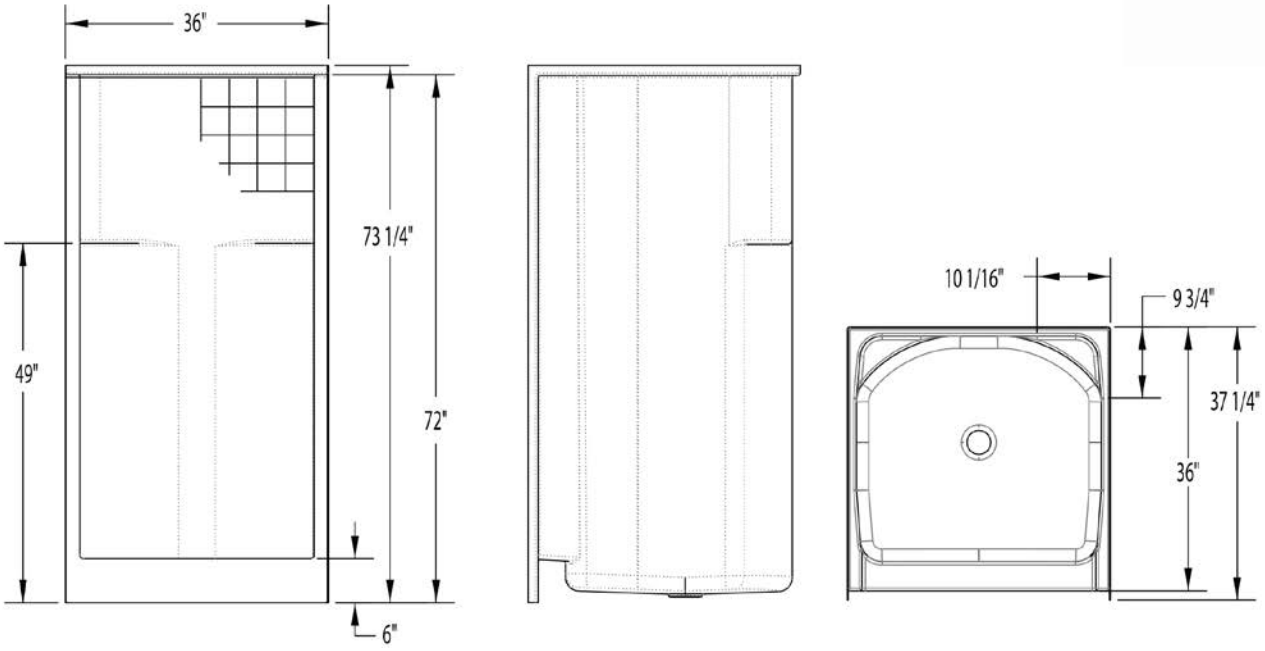
36"
73 1/4"
49"
72"
6"
10 1/16"
9 3/4"
37 1/4"
36"

1363CTC



Material : AcrylX™

Features

- 1-Piece shower stall
- Textured tile finish is easy to maintain is easy to clean, no messy grout lines is easy to clean, no messy grout lines
- Molded toiletry shelves
- Tall version of 1363CT
- Slip-resistant textured floor for safety
- Center drain

1363CTC - PRICING CATEGORY : EF

SKU	Color	Configuration	Dimensions & Weight	MSRP
1363CTC-AL	Almond	Center Drain	36” x 36” x 76” / 93 lb 914mm x 914mm x 1930mm / 42.18 kg	$ 1148
1363CTC-BI	Biscuit			$ 1148
1363CTC-BK	Black			$ 1468
1363CTC-BO	Bone			$ 1148
1363CTC-LN	Linen			$ 1148
1363CTC-ME	Mexican Sand			$ 1468
1363CTC-SD	Sandbar			$ 1468
1363CTC-ST	Sterling Silver			$ 1468
1363CTC-WH	White			$ 1113

OPTIONS

SKU	Description	MSRP
4200BRASDRSF	2” Brass Surefit Joint Shower Drain Brass drain material Snap in strainer-stainless steel No-caulk connection.	$ 48
30UPLT	Extra reinforcement for after market accessories installment. Order per wall Reinforcement is applied 30 inches and up **ONLY**,	$ 63
30UPRT	Extra reinforcement for after market accessories installment. Order per wall Reinforcement is applied 30 inches and up **ONLY**,	$ 63
30UPBK		$ 63

OPTIONS

SKU	Description	MSRP
FLATLT	Extra reinforcement for after market accessories installment. Order per wall Reinforcement is applied to flat surface areas.	$ 81
FLATRT	Extra reinforcement for after market accessories installment Order per wall Reinforcement is applied to flat surface areas.	$ 81
FLATBK	Extra reinforcement for after market accessories installment. Order per wall Reinforcement is applied to flat surface areas.	$ 81
SC	Ultra strong honeycomb reinforcement for demanding applications that require additional strength	$ 101
35RKBO	Finish repair kit - Case of 12 Available in White **(WH)**, or Bone **(BO)**,	$ 303
35RKWH		$ 303

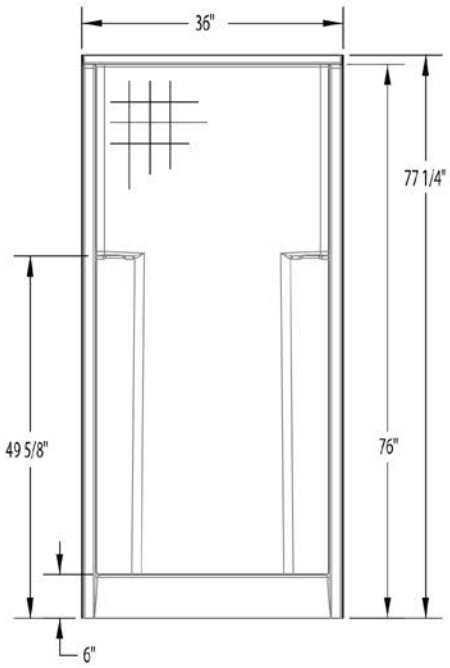
36"
77 1/4"
49 5/8"
76"
6"

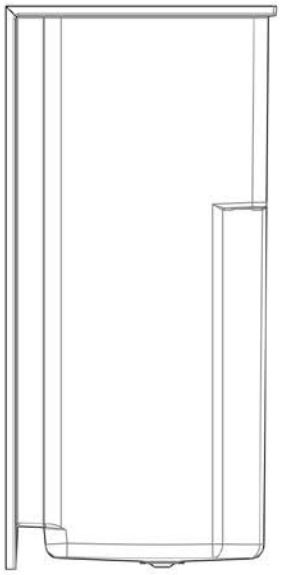

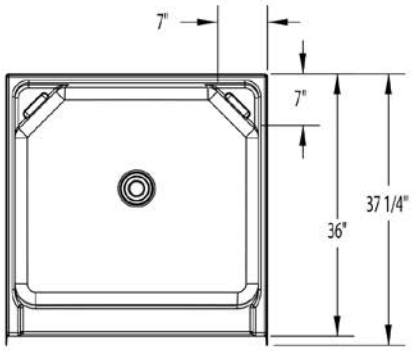
7"
7"
37 1/4"
36"

1363CTM AFR



Material : AcrylX™

Features

- 1-Piece shower stall
- Textured tile finish is easy to maintain is easy to clean, no messy grout lines
- Molded toiletry shelves
- This AFR unit accommodates the installation of drain above the floor
- Center drain
- AcrylX™ applied acrylic surface

1363CTM AFR - PRICING CATEGORY : EF

SKU	Color	Configuration	Dimensions & Weight	MSRP
1363CTM-AL	Almond	Center Drain	36” x 36” x 75” / 91 lb 914mm x 914mm x 1905mm / 41.27 kg	$ 1181
1363CTM-BI	Biscuit			$ 1181
1363CTM-BK	Black			$ 1501
1363CTM-BO	Bone			$ 1181
1363CTM-LN	Linen			$ 1181
1363CTM-ME	Mexican Sand			$ 1501
1363CTM-SD	Sandbar			$ 1501
1363CTM-ST	Sterling Silver			$ 1501
1363CTM-WH	White			$ 1146

OPTIONS

SKU	Description	MSRP
30UPLT	Extra reinforcement for after market accessories installment. Order per wall Reinforcement is applied 30 inches and up **ONLY**,	$ 63
30UPRT	Extra reinforcement for after market accessories installment. Order per wall Reinforcement is applied 30 inches and up **ONLY**,	$ 63
30UPBK	Extra reinforcement for after market accessories installment. Order per wall Reinforcement is applied 30 inches and up **ONLY**,	$ 63
FLATLT	Extra reinforcement for after market accessories installment. Order per wall Reinforcement is applied to flat surface areas.	$ 81

OPTIONS

SKU	Description	MSRP
FLATRT	Extra reinforcement for after market accessories installment Order per wall Reinforcement is applied to flat surface areas.	$ 81
FLATBK	Extra reinforcement for after market accessories installment. Order per wall Reinforcement is applied to flat surface areas.	$ 81
SC	Ultra strong honeycomb reinforcement for demanding applications that require additional strength	$ 101
35RKBO	Finish repair kit - Case of 12 Available in White **(WH)**, or Bone **(BO)**,	$ 303
35RKWH		$ 303

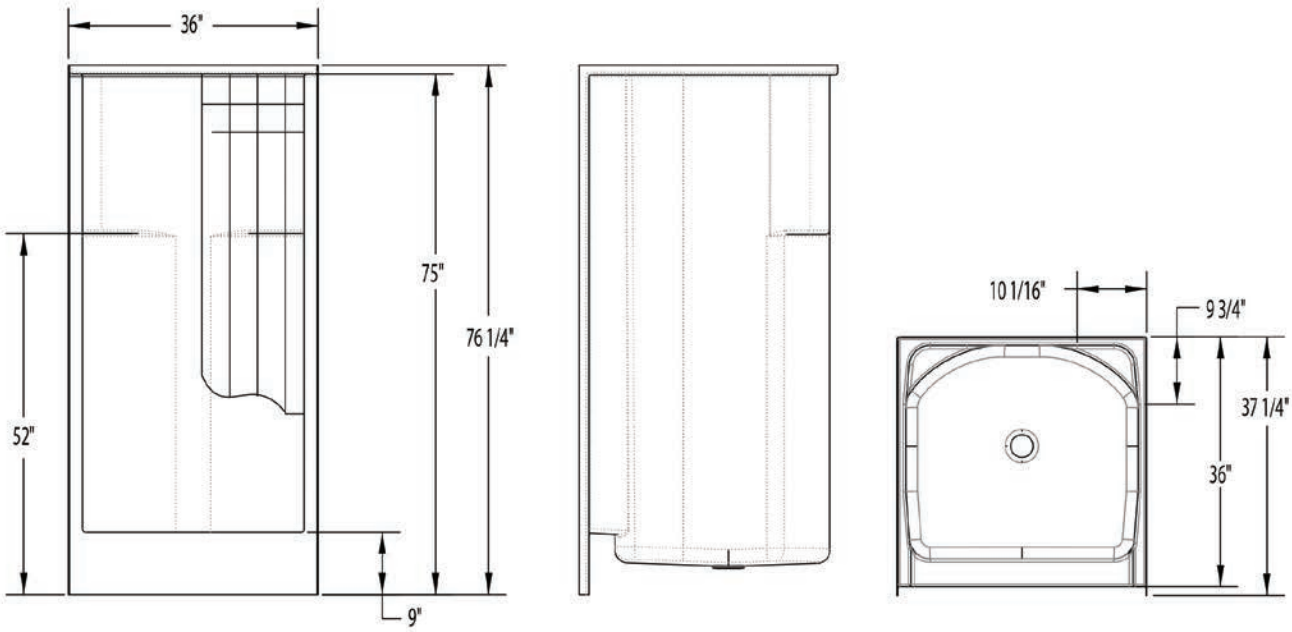
36"
75"
76 1/4"
52"
9"
10 1/16"
9 3/4"
37 1/4"
36"

1363STC



Material : AcrylX™

Features

- 1-Piece shower stall
- Smooth tile finish is easy to clean, no messy grout is easy to maintain
- Molded toiletry shelves
- Slip-resistant textured floor for safety
- Center drain
- AcrylX™ applied acrylic surface

1363STC - PRICING CATEGORY : EF

SKU	Color	Configuration	Dimensions & Weight	MSRP
1363STC-AL	Almond	Center Drain	36” x 36” x 76” / 97 lb 914mm x 914mm x 1930mm / 43.99 kg	$ 1195
1363STC-BI	Biscuit			$ 1195
1363STC-BK	Black			$ 1515
1363STC-BO	Bone			$ 1195
1363STC-LN	Linen			$ 1195
1363STC-ME	Mexican Sand			$ 1515
1363STC-SD	Sandbar			$ 1515
1363STC-ST	Sterling Silver			$ 1515
1363STC-WH	White			$ 1160

OPTIONS

SKU	Description	MSRP
4200BRASDRSF	2” Brass Surefit Joint Shower Drain Brass drain material Snap in strainer-stainless steel No-caulk connection.	$ 48
30UPLT	Extra reinforcement for after market accessories installment. Order per wall Reinforcement is applied 30 inches and up **ONLY**,	$ 63
30UPRT	Extra reinforcement for after market accessories installment. Order per wall Reinforcement is applied 30 inches and up **ONLY**,	$ 63
30UPBK		$ 63

OPTIONS

SKU	Description	MSRP
FLATLT	Extra reinforcement for after market accessories installment. Order per wall Reinforcement is applied to flat surface areas.	$ 81
FLATRT	Extra reinforcement for after market accessories installment Order per wall Reinforcement is applied to flat surface areas.	$ 81
FLATBK	Extra reinforcement for after market accessories installment. Order per wall Reinforcement is applied to flat surface areas.	$ 81
SC	Ultra strong honeycomb reinforcement for demanding applications that require additional strength	$ 101
35RKBO	Finish repair kit - Case of 12 Available in White **(WH)**, or Bone **(BO)**,	$ 303
35RKWH		$ 303

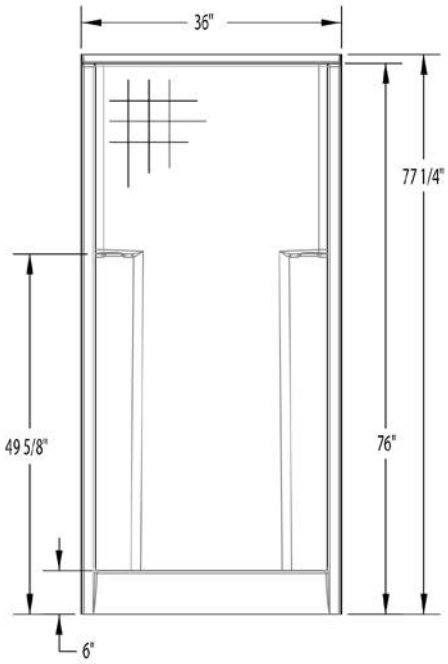
36"
77 1/4"
49 5/8"
76"
6"

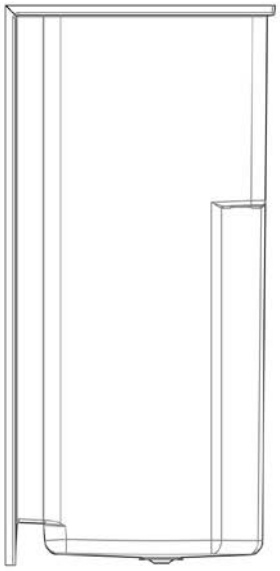

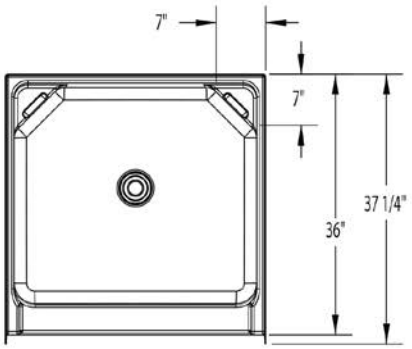
7"
7"
37 1/4"
36"

1363TRIO





Material : AcrylX™

Features

- 3-piece shower
- Smooth wall is easy to clean
- Molded toiletry shelf
- Center drain
- AcrylX™ applied acrylic surface

1363TRIO - PRICING CATEGORY : ER

SKU	Color	Configuration	Dimensions & Weight	MSRP
1363TRIO-AL	Almond	Center Drain	36” x 36” x 74” / 106 lb 914mm x 914mm x 1880mm / 48.07 kg	$ 1267
1363TRIO-BI	Biscuit			$ 1267
1363TRIO-BK	Black			$ 1587
1363TRIO-BO	Bone			$ 1267
1363TRIO-LN	Linen			$ 1267
1363TRIO-ME	Mexican Sand			$ 1587
1363TRIO-SD	Sandbar			$ 1587
1363TRIO-ST	Sterling Silver			$ 1587
1363TRIO-WH	White			$ 1232

OPTIONS

SKU	Description	MSRP
4200BRASDRSF	2” Brass Surefit Joint Shower Drain Brass drain material Snap in strainer-stainless steel No-caulk connection.	$ 48
30UPLT	Extra reinforcement for after market accessories installment. Order per wall Reinforcement is applied 30 inches and up **ONLY**,	$ 63
30UPRT	Extra reinforcement for after market accessories installment. Order per wall Reinforcement is applied 30 inches and up **ONLY**,	$ 63
30UPBK		$ 63

OPTIONS

SKU	Description	MSRP
FLATLT	Extra reinforcement for after market accessories installment. Order per wall Reinforcement is applied to flat surface areas.	$ 81
FLATRT	Extra reinforcement for after market accessories installment Order per wall Reinforcement is applied to flat surface areas.	$ 81
FLATBK	Extra reinforcement for after market accessories installment. Order per wall Reinforcement is applied to flat surface areas.	$ 81
SC	Ultra strong honeycomb reinforcement for demanding applications that require additional strength	$ 101
35RKBO	Finish repair kit - Case of 12 Available in White **(WH)**, or Bone **(BO)**,	$ 303
35RKWH		$ 303

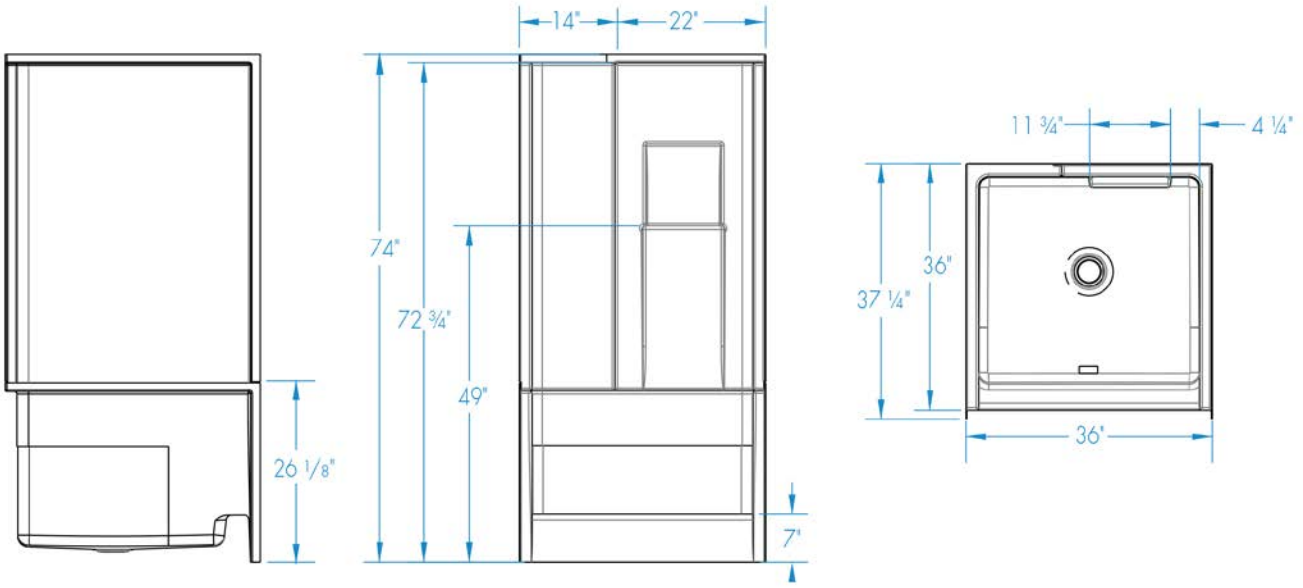
14"
22"
74"
72 3/4"
49"
26 1/8"
7"
11 3/4"
4 1/4"
37 1/4"
36"
36"

1382NA2P



Material : AcrylX™

Features

- 2-piece shower
- Smooth wall is easy to clean
- Neo-angle corner design
- Molded toiletry shelf
- Requires 56 Inch turning space
- Center drain
- Enclosure opening: 17-5/8 Inches x 23-7/8 Inches x 17-5/8 Inches
- AcrylX™ applied acrylic surface

1382NA2P - PRICING CATEGORY : ER

SKU	Color	Configuration	Dimensions & Weight	MSRP
1382NA2P-AL	Almond	Center Drain	38” x 38” x 72” / 84 lb 965mm x 965mm x 1829mm / 38.1 kg	$ 1296
1382NA2P-BI	Biscuit			$ 1296
1382NA2P-BK	Black			$ 1616
1382NA2P-BO	Bone			$ 1296
1382NA2P-LN	Linen			$ 1296
1382NA2P-ME	Mexican Sand			$ 1616
1382NA2P-SD	Sandbar			$ 1616
1382NA2P-ST	Sterling Silver			$ 1616
1382NA2P-WH	White			$ 1261

OPTIONS

SKU	Description	MSRP
4200BRASDRSF	2” Brass Surefit Joint Shower Drain Brass drain material Snap in strainer-stainless steel No-caulk connection.	$ 48
30UPLT	Extra reinforcement for after market accessories installment. Order per wall Reinforcement is applied 30 inches and up **ONLY**,	$ 63
30UPRT	Extra reinforcement for after market accessories installment. Order per wall Reinforcement is applied 30 inches and up **ONLY**,	$ 63
30UPBK		$ 63

OPTIONS

SKU	Description	MSRP
FLATLT	Extra reinforcement for after market accessories installment. Order per wall Reinforcement is applied to flat surface areas.	$ 81
FLATRT	Extra reinforcement for after market accessories installment Order per wall Reinforcement is applied to flat surface areas.	$ 81
FLATBK	Extra reinforcement for after market accessories installment. Order per wall Reinforcement is applied to flat surface areas.	$ 81
SC	Ultra strong honeycomb reinforcement for demanding applications that require additional strength	$ 101
35RKBO	Finish repair kit - Case of 12 Available in White **(WH)**, or Bone **(BO)**,	$ 303
35RKWH		$ 303

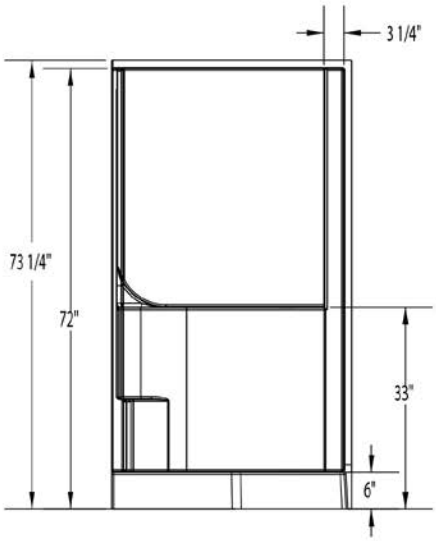
3 1/4"
73 1/4"
72"
33"
6"

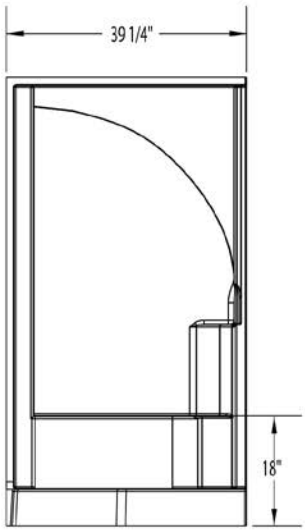
39 1/4"
18"

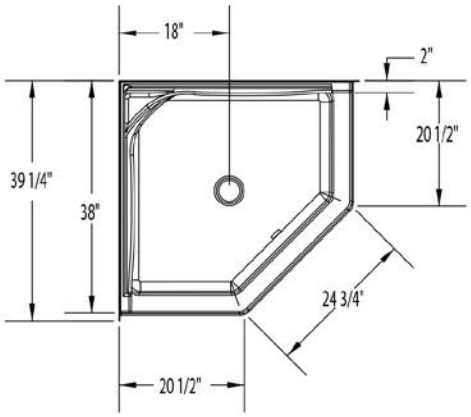
18"
2"
20 1/2"
39 1/4"
38"
24 3/4"
20 1/2"

1382NAC





Material : AcrylX™

Features

- 1-Piece shower stall
- Smooth wall finish is easy to clean
- Neo-angle corner design
- Decorative border at top and base
- Molded toiletry shelf
- Unit is ANSI Z124 and IPC compliant, but not UPC compliant for floor space. Please check state and local code for your area
- Slip-resistant textured floor for safety
- Center drain
- Enclosure opening: 17-1/2 Inches x 22-5/8 Inches x 17-1/2 Inches
- AcrylX™ Applied Acrylic surface

1382NAC - PRICING CATEGORY : EF

SKU	Color	Configuration	Dimensions & Weight	MSRP
1382NAC-AL	Almond	Center Drain	38” x 38” x 72” / 86 lb 965mm x 965mm x 1829mm / 39.0 kg	$ 1124
1382NAC-BI	Biscuit			$ 1124
1382NAC-BK	Black			$ 1444
1382NAC-BO	Bone			$ 1124
1382NAC-LN	Linen			$ 1124
1382NAC-ME	Mexican Sand			$ 1444
1382NAC-SD	Sandbar			$ 1444
1382NAC-ST	Sterling Silver			$ 1444
1382NAC-WH	White			$ 1089

OPTIONS

SKU	Description	MSRP
4200BRASDRSF	2” Brass Surefit Joint Shower Drain Brass drain material Snap in strainer-stainless steel No-caulk connection.	$ 48
30UPLT	Extra reinforcement for after market accessories installment. Order per wall Reinforcement is applied 30 inches and up **ONLY**,	$ 63
30UPRT	Extra reinforcement for after market accessories installment. Order per wall Reinforcement is applied 30 inches and up **ONLY**,	$ 63
30UPBK		$ 63

OPTIONS

SKU	Description	MSRP
FLATLT	Extra reinforcement for after market accessories installment. Order per wall Reinforcement is applied to flat surface areas.	$ 81
FLATRT	Extra reinforcement for after market accessories installment Order per wall Reinforcement is applied to flat surface areas.	$ 81
FLATBK	Extra reinforcement for after market accessories installment. Order per wall Reinforcement is applied to flat surface areas.	$ 81
SC	Ultra strong honeycomb reinforcement for demanding applications that require additional strength	$ 101
35RKBO	Finish repair kit - Case of 12 Available in White **(WH)**, or Bone **(BO)**,	$ 303
35RKWH		$ 303

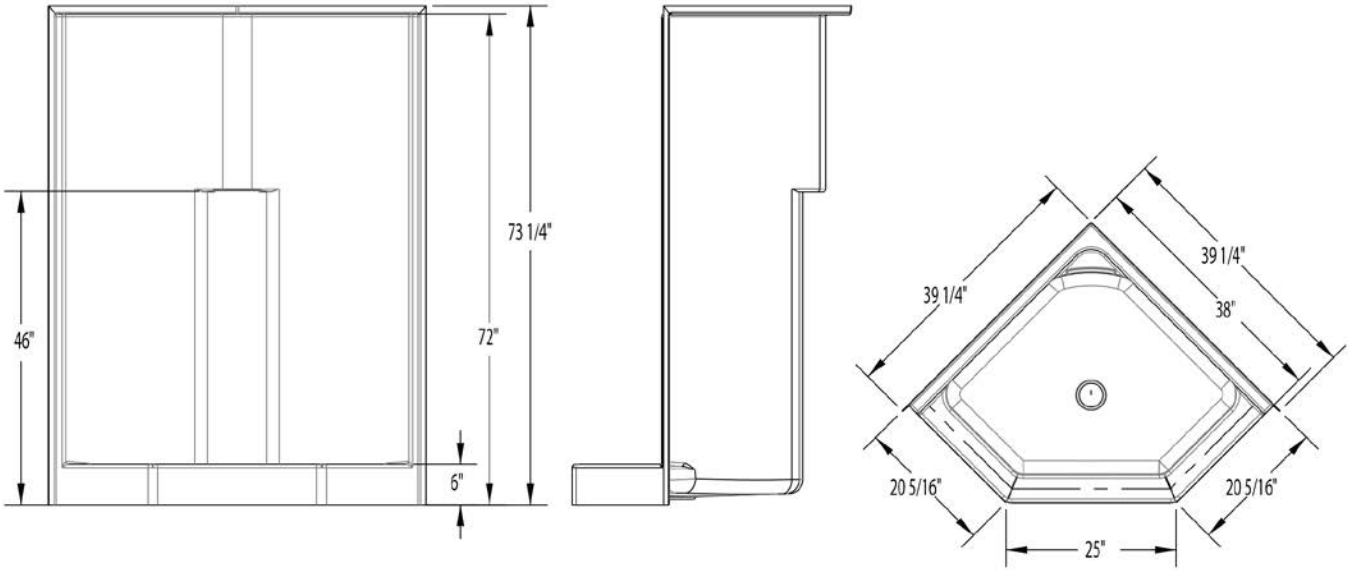
73 1/4"
46"
72"
6"
39 1/4"
39 1/4"
38"
20 5/16"
20 5/16"
25"

1382NACT





Material : AcrylX™

Features

- 1-Piece shower stall
- Textured tile finish is easy to maintain is easy to clean
- Neo-angle design
- Molded toiletry shelf
- Slip-resistant textured floor for safety
- Center drain
- Enclosure Opening: 17-5/8 Inches x 23-1/2 Inches x 17-5/8 Inches
- AcrylX™ applied acrylic surface

1382NACT - PRICING CATEGORY : EF

SKU	Color	Configuration	Dimensions & Weight	MSRP
1382NACT-AL	Almond	Center Drain	38” x 38” x 76” / 86 lb 965mm x 965mm x 1930mm / 39.0 kg	$ 1169
1382NACT-BI	Biscuit			$ 1169
1382NACT-BK	Black			$ 1489
1382NACT-BO	Bone			$ 1169
1382NACT-LN	Linen			$ 1169
1382NACT-ME	Mexican Sand			$ 1489
1382NACT-SD	Sandbar			$ 1489
1382NACT-ST	Sterling Silver			$ 1489
1382NACT-WH	White			$ 1134

OPTIONS

SKU	Description	MSRP
4200BRASDRSF	2” Brass Surefit Joint Shower Drain Brass drain material Snap in strainer-stainless steel No-caulk connection.	$ 48
30UPLT	Extra reinforcement for after market accessories installment. Order per wall Reinforcement is applied 30 inches and up **ONLY**,	$ 63
30UPRT	Extra reinforcement for after market accessories installment. Order per wall Reinforcement is applied 30 inches and up **ONLY**,	$ 63
30UPBK		$ 63

OPTIONS

SKU	Description	MSRP
FLATLT	Extra reinforcement for after market accessories installment. Order per wall Reinforcement is applied to flat surface areas.	$ 81
FLATRT	Extra reinforcement for after market accessories installment Order per wall Reinforcement is applied to flat surface areas.	$ 81
FLATBK	Extra reinforcement for after market accessories installment. Order per wall Reinforcement is applied to flat surface areas.	$ 81
SC	Ultra strong honeycomb reinforcement for demanding applications that require additional strength	$ 101
35RKBO	Finish repair kit - Case of 12 Available in White **(WH)**, or Bone **(BO)**,	$ 303
35RKWH		$ 303

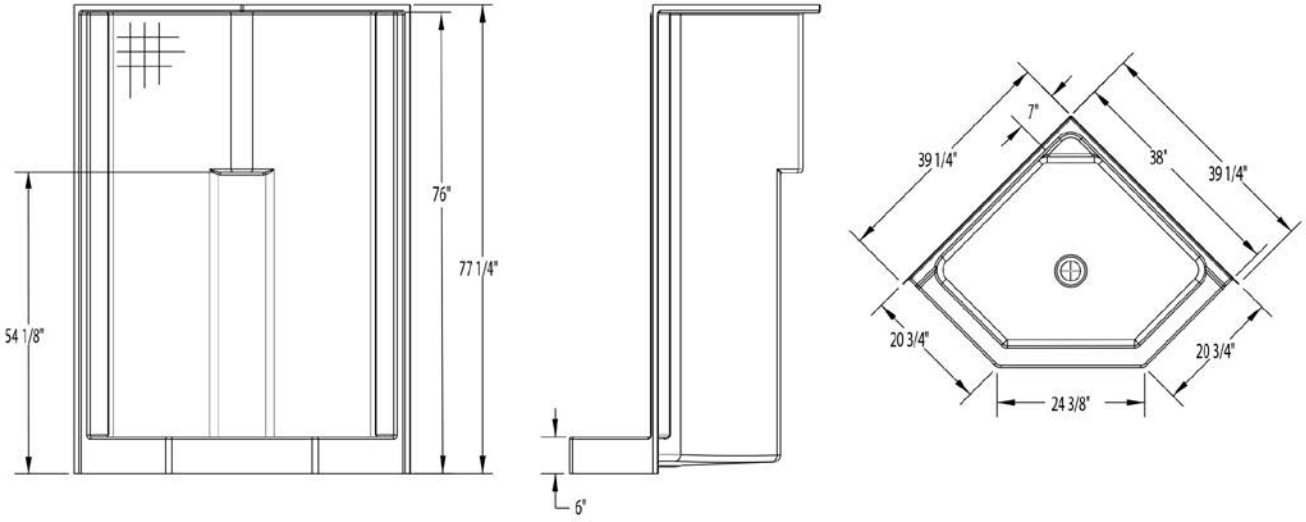
54 1/8"
76"
77 1/4"
6"
7"
39 1/4"
38"
39 1/4"
20 3/4"
20 3/4"
24 3/8"

1382NAT





Material : AcrylX™

Features

- 1-Piece shower stall
- Smooth wall finish is easy to clean
- Neo-angle corner design
- Molded toiletry shelf
- Unit is ANSI Z124 and IPC compliant, but not UPC compliant for floor space. Please check state and local code for your area
- Slip-resistant textured floor for safety
- Center drain
- Enclosure opening: 17-1/2 Inches x 22-5/8 Inches x 17-1/2 Inches
- AcrylX™ applied acrylic surface

1382NAT - PRICING CATEGORY : EF

SKU	Color	Configuration	Dimensions & Weight	MSRP
1382NAT-AL	Almond	Center Drain	38” x 38” x 80” / 86 lb 965mm x 965mm x 2032mm / 39.0 kg	$ 1210
1382NAT-BI	Biscuit			$ 1210
1382NAT-BK	Black			$ 1530
1382NAT-BO	Bone			$ 1210
1382NAT-LN	Linen			$ 1210
1382NAT-ME	Mexican Sand			$ 1530
1382NAT-SD	Sandbar			$ 1530
1382NAT-ST	Sterling Silver			$ 1530
1382NAT-WH	White			$ 1175

OPTIONS

SKU	Description	MSRP
4200BRASDRSF	2” Brass Surefit Joint Shower Drain Brass drain material Snap in strainer-stainless steel No-caulk connection.	$ 48
30UPLT	Extra reinforcement for after market accessories installment. Order per wall Reinforcement is applied 30 inches and up **ONLY**,	$ 63
30UPRT	Extra reinforcement for after market accessories installment. Order per wall Reinforcement is applied 30 inches and up **ONLY**,	$ 63
30UPBK		$ 63

OPTIONS

SKU	Description	MSRP
FLATLT	Extra reinforcement for after market accessories installment. Order per wall Reinforcement is applied to flat surface areas.	$ 81
FLATRT	Extra reinforcement for after market accessories installment Order per wall Reinforcement is applied to flat surface areas.	$ 81
FLATBK	Extra reinforcement for after market accessories installment. Order per wall Reinforcement is applied to flat surface areas.	$ 81
35RKBO	Finish repair kit - Case of 12 Available in White **(WH)**, or Bone **(BO)**,	$ 303
35RKWH		$ 303

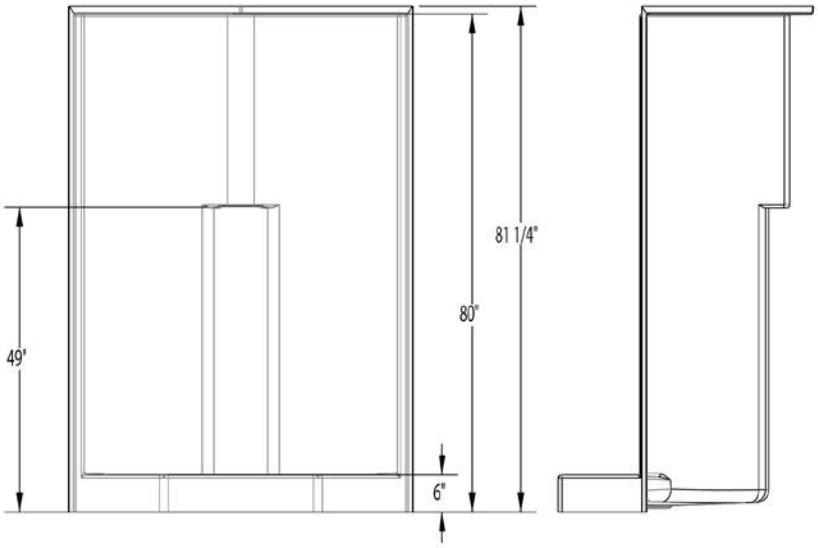
81 1/4"
80"
49"
6"

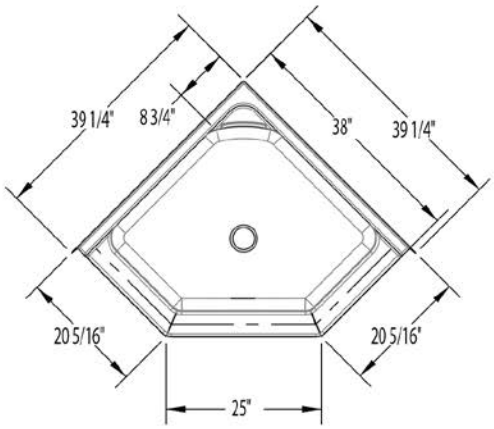
39 1/4"
8 3/4"
38"
39 1/4"
20 5/16"
20 5/16"
25"

1382NT2P





Material : AcrylX™

Features

- 2-piece shower
- Smooth wall is easy to clean
- Neo-angle corner design
- Molded toiletry shelf
- Requires 56 Inch turning space
- Center drain
- Enclosure opening: 17-5/8 Inches x 23-7/8 Inches x 17-5/8 Inches
- AcrylX™ applied acrylic surface
- West Zone Only

1382NT2P - PRICING CATEGORY : ER

SKU	Color	Configuration	Dimensions & Weight	MSRP
1382NT2P-AL	Almond	Center Drain	38” x 38” x 78” / 91 lb 965mm x 965mm x 1981mm / 41.27 kg	$ 1193
1382NT2P-BI	Biscuit			$ 1193
1382NT2P-BK	Black			$ 1513
1382NT2P-BO	Bone			$ 1193
1382NT2P-LN	Linen			$ 1193
1382NT2P-ME	Mexican Sand			$ 1513
1382NT2P-SD	Sandbar			$ 1513
1382NT2P-ST	Sterling Silver			$ 1513
1382NT2P-WH	White			$ 1158

OPTIONS

SKU	Description	MSRP
4200BRASDRSF	2” Brass Surefit Joint Shower Drain Brass drain material Snap in strainer-stainless steel No-caulk connection.	$ 48
30UPLT	Extra reinforcement for after market accessories installment. Order per wall Reinforcement is applied 30 inches and up **ONLY**,	$ 63
30UPRT	Extra reinforcement for after market accessories installment. Order per wall Reinforcement is applied 30 inches and up **ONLY**,	$ 63
30UPBK		$ 63

OPTIONS

SKU	Description	MSRP
FLATLT	Extra reinforcement for after market accessories installment. Order per wall Reinforcement is applied to flat surface areas.	$ 81
FLATRT	Extra reinforcement for after market accessories installment Order per wall Reinforcement is applied to flat surface areas.	$ 81
FLATBK	Extra reinforcement for after market accessories installment. Order per wall Reinforcement is applied to flat surface areas.	$ 81
SC	Ultra strong honeycomb reinforcement for demanding applications that require additional strength	$ 101
35RKBO	Finish repair kit - Case of 12 Available in White **(WH)**, or Bone **(BO)**,	$ 303
35RKWH		$ 303

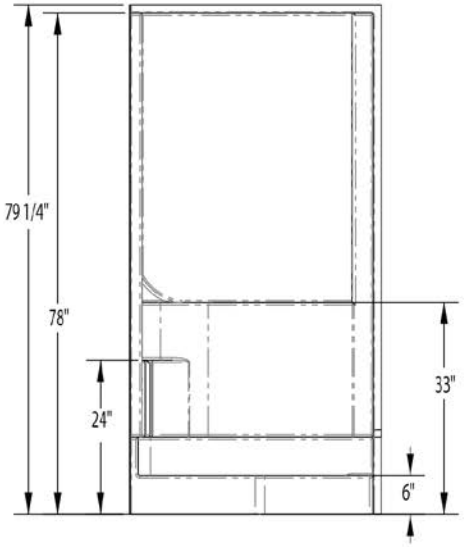
79 1/4"
78"
24"
33"
6"

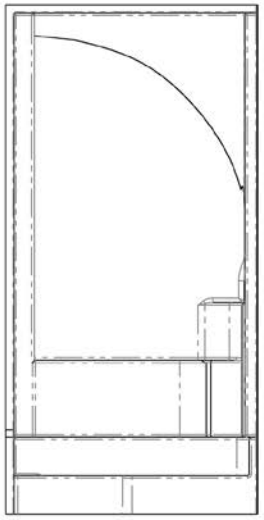

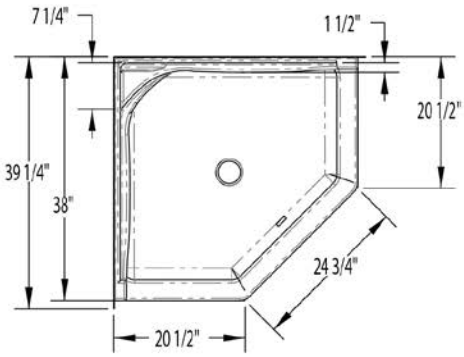
7 1/4"
1 1/2"
20 1/2"
39 1/4"
38"
24 3/4"
20 1/2"

1422C





Material : AcrylX™

Features

- 1-Piece Shower stall
- Textured tile finish is easy to maintain is easy to clean
- Corner design
- Molded toiletry shelf
- Slip-resistant textured floor for safety
- Center drain
- Enclosure opening: 37 Inches x 37 Inches
- AcrylX™ applied acrylic surface

1422C - PRICING CATEGORY : EF

SKU	Color	Configuration	Dimensions & Weight	MSRP
1422C-AL	Almond	Center Drain	42” x 42” x 78 3/4” / 111 lb 1067mm x 1067mm x 2000mm / 50.34 kg	$ 1309
1422C-BI	Biscuit			$ 1309
1422C-BK	Black			$ 1629
1422C-BO	Bone			$ 1309
1422C-LN	Linen			$ 1309
1422C-ME	Mexican Sand			$ 1629
1422C-SD	Sandbar			$ 1629
1422C-ST	Sterling Silver			$ 1629
1422C-WH	White			$ 1274

OPTIONS

SKU	Description	MSRP
4200BRASDRSF	2” Brass Surefit Joint Shower Drain Brass drain material Snap in strainer-stainless steel No-caulk connection.	$ 48
30UPLT	Extra reinforcement for after market accessories installment. Order per wall Reinforcement is applied 30 inches and up **ONLY**,	$ 63
30UPRT	Extra reinforcement for after market accessories installment. Order per wall Reinforcement is applied 30 inches and up **ONLY**,	$ 63
30UPBK		$ 63

OPTIONS

SKU	Description	MSRP
FLATLT	Extra reinforcement for after market accessories installment. Order per wall Reinforcement is applied to flat surface areas.	$ 81
FLATRT	Extra reinforcement for after market accessories installment Order per wall Reinforcement is applied to flat surface areas.	$ 81
FLATBK	Extra reinforcement for after market accessories installment. Order per wall Reinforcement is applied to flat surface areas.	$ 81
SC	Ultra strong honeycomb reinforcement for demanding applications that require additional strength	$ 101
35RKBO	Finish repair kit - Case of 12 Available in White **(WH)**, or Bone **(BO)**,	$ 303
35RKWH		$ 303

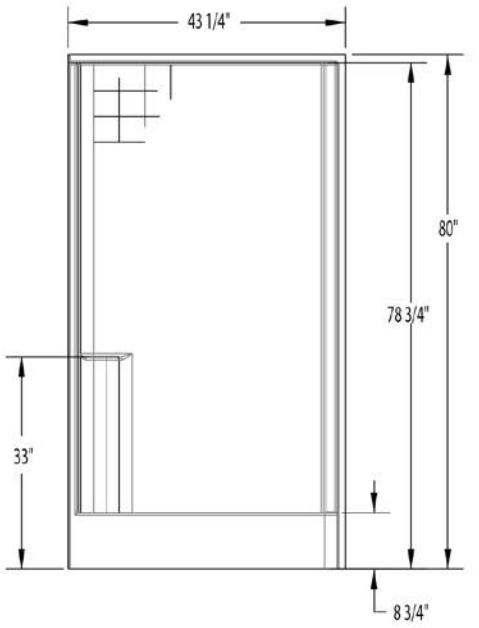
43 1/4"
80"
78 3/4"
33"
8 3/4"

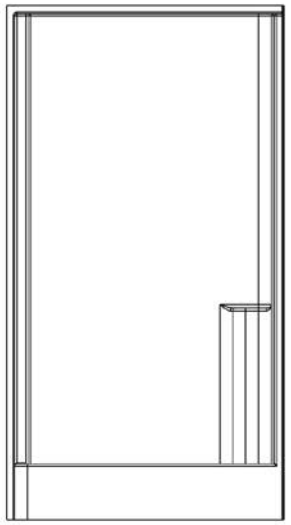

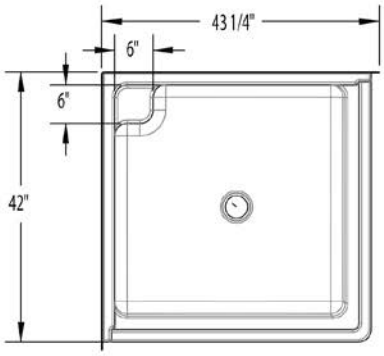
43 1/4"
6"
6"
42"

1422STS



Material : AcrylX™

Features

- 1-Piece Shower stall
- Smooth tile finish is easy to clean, no messy grout is easy to maintain, no messy grout
- Corner design
- Molded toiletry shelf
- Molded seat
- Slip-resistant textured floor for safety
- Center drain
- Enclosure opening: 37 Inches x 37 Inches
- AcrylX™ applied acrylic surface

1422STS - PRICING CATEGORY : EF

SKU	Color	Configuration	Dimensions & Weight	MSRP
1422STS-AL	Almond	Center Drain	42” x 42” x 80” / 114 lb 1067mm x 1067mm x 2032mm / 51.7 kg	$ 1292
1422STS-BI	Biscuit			$ 1292
1422STS-BK	Black			$ 1612
1422STS-BO	Bone			$ 1292
1422STS-LN	Linen			$ 1292
1422STS-ME	Mexican Sand			$ 1612
1422STS-SD	Sandbar			$ 1612
1422STS-ST	Sterling Silver			$ 1612
1422STS-WH	White			$ 1257

OPTIONS

SKU	Description	MSRP
4200BRASDRSF	2” Brass Surefit Joint Shower Drain Brass drain material Snap in strainer-stainless steel No-caulk connection.	$ 48
30UPLT	Extra reinforcement for after market accessories installment. Order per wall Reinforcement is applied 30 inches and up **ONLY**,	$ 63
30UPRT	Extra reinforcement for after market accessories installment. Order per wall Reinforcement is applied 30 inches and up **ONLY**,	$ 63
30UPBK		$ 63

OPTIONS

SKU	Description	MSRP
FLATLT	Extra reinforcement for after market accessories installment. Order per wall Reinforcement is applied to flat surface areas.	$ 81
FLATRT	Extra reinforcement for after market accessories installment Order per wall Reinforcement is applied to flat surface areas.	$ 81
FLATBK	Extra reinforcement for after market accessories installment. Order per wall Reinforcement is applied to flat surface areas.	$ 81
SC	Ultra strong honeycomb reinforcement for demanding applications that require additional strength	$ 101
35RKBO	Finish repair kit - Case of 12 Available in White **(WH)**, or Bone **(BO)**,	$ 303
35RKWH		$ 303

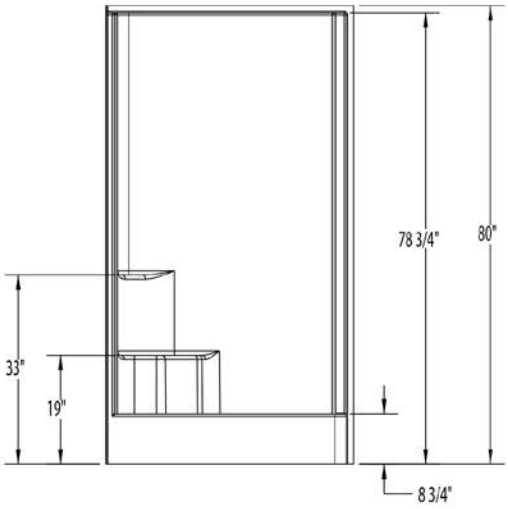
78 3/4"
80"
33"
19"
8 3/4"

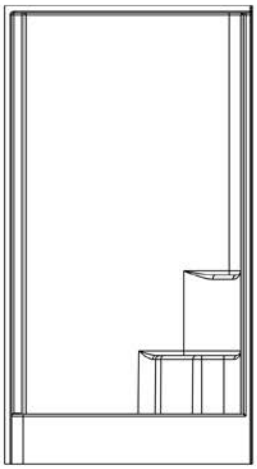

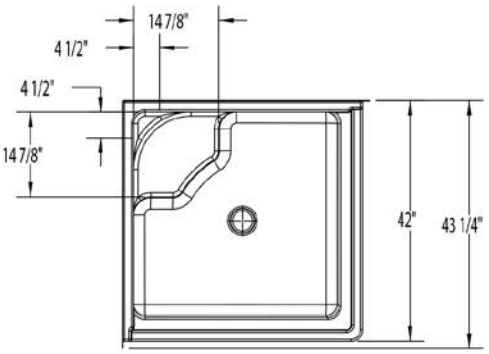
14 7/8"
4 1/2"
4 1/2"
14 7/8"
42"
43 1/4"

1423C





Material : AcrylX™

Features

- 1-Piece Shower stall
- Smooth wall finish is easy to clean
- Molded toiletry shelves
- Slip-resistant textured floor for safety
- Center drain
- AcrylX™ applied acrylic surface
- East Zone Only

1423C - PRICING CATEGORY : EF

SKU	Color	Configuration	Dimensions & Weight	MSRP
1423C-AL	Almond	Center Drain	42” x 34” x 72” / 102 lb 1067mm x 864mm x 1829mm / 46.26 kg	$ 1203
1423C-BI	Biscuit			$ 1203
1423C-BK	Black			$ 1523
1423C-BO	Bone			$ 1203
1423C-LN	Linen			$ 1203
1423C-ME	Mexican Sand			$ 1523
1423C-SD	Sandbar			$ 1523
1423C-ST	Sterling Silver			$ 1523
1423C-WH	White			$ 1168

OPTIONS

SKU	Description	MSRP
4200BRASDRSF	2” Brass Surefit Joint Shower Drain Brass drain material Snap in strainer-stainless steel No-caulk connection.	$ 48

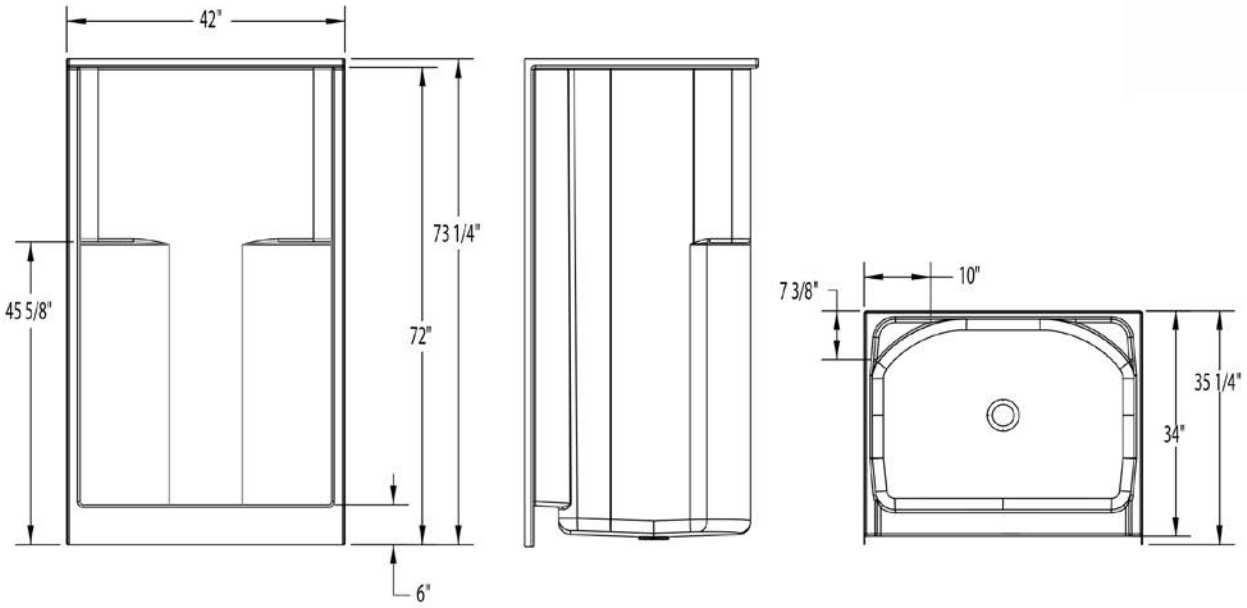
42"
73 1/4"
45 5/8"
72"
6"
10"
7 3/8"
35 1/4"
34"

1423CM AFR





Material : AcrylX™

Features

- 1-Piece Shower stall
- Smooth wall finish is easy to clean
- Molded toiletry shelves
- This AFR unit accommodates the installation of drain above the floor
- Slip-resistant textured floor for safety
- Center drain
- AcrylX™ applied acrylic surface
- East Zone Only

1423CM AFR - PRICING CATEGORY : EF

SKU	Color	Configuration	Dimensions & Weight	MSRP
1423CM-AL	Almond	Center Drain	42” x 34” x 75” / 104 lb 1067mm x 864mm x 1905mm / 47.17 kg	$ 1372
1423CM-BI	Biscuit			$ 1372
1423CM-BK	Black			$ 1692
1423CM-BO	Bone			$ 1372
1423CM-LN	Linen			$ 1372
1423CM-ME	Mexican Sand			$ 1692
1423CM-SD	Sandbar			$ 1692
1423CM-ST	Sterling Silver			$ 1692
1423CM-WH	White			$ 1337

OPTIONS

SKU	Description	MSRP
30UPLT	Extra reinforcement for after market accessories installment. Order per wall Reinforcement is applied 30 inches and up **ONLY**,	$ 63
30UPRT	Extra reinforcement for after market accessories installment. Order per wall Reinforcement is applied 30 inches and up **ONLY**,	$ 63
30UPBK	Extra reinforcement for after market accessories installment. Order per wall Reinforcement is applied 30 inches and up **ONLY**,	$ 63
FLATLT	Extra reinforcement for after market accessories installment. Order per wall Reinforcement is applied to flat surface areas.	$ 81

OPTIONS

SKU	Description	MSRP
FLATRT	Extra reinforcement for after market accessories installment Order per wall Reinforcement is applied to flat surface areas.	$ 81
FLATBK	Extra reinforcement for after market accessories installment. Order per wall Reinforcement is applied to flat surface areas.	$ 81
SC	Ultra strong honeycomb reinforcement for demanding applications that require additional strength	$ 101
35RKBO	Finish repair kit - Case of 12 Available in White **(WH)**, or Bone **(BO)**,	$ 303
35RKWH		$ 303

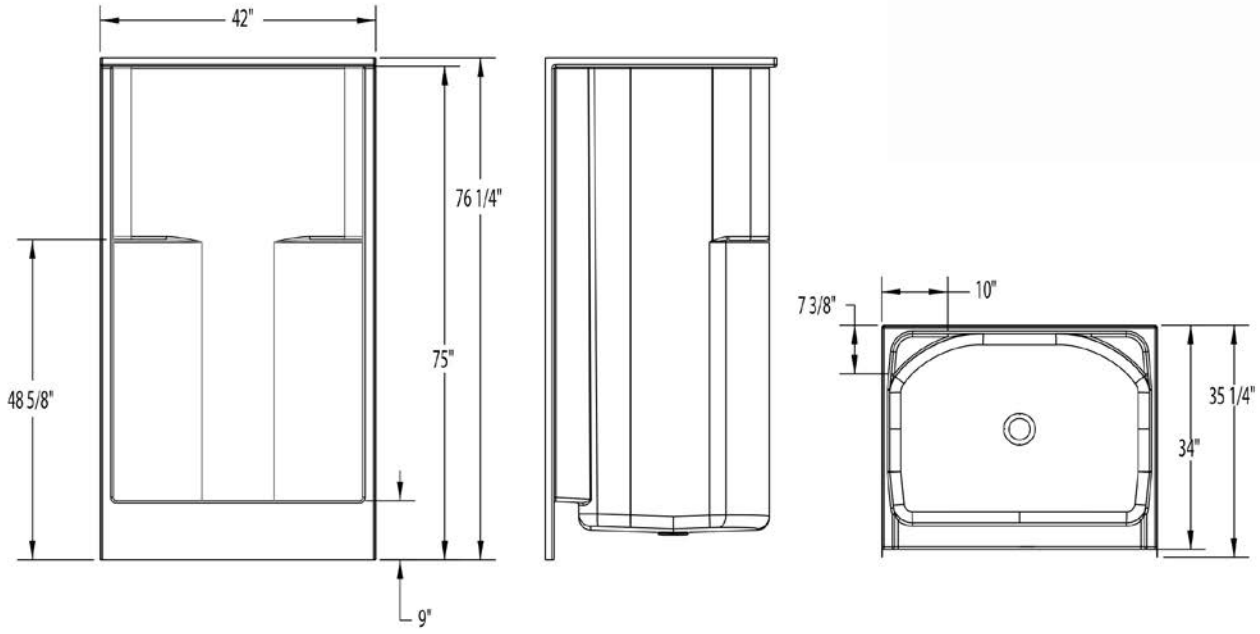
42"
76 1/4"
75"
48 5/8"
9"
10"
7 3/8"
35 1/4"
34"

1423CT





Material : AcrylX™

Features

- 1-Piece Shower stall
- Smooth wall finish is easy to clean
- Molded toiletry shelves
- Center drain
- AcrylX™ applied acrylic surface

1423CT - PRICING CATEGORY : EF

SKU	Color	Configuration	Dimensions & Weight	MSRP
1423CT-AL	Almond	Center Drain	42” x 42” x 76” / 129 lb 1067mm x 1067mm x 1930mm / 58.5 kg	$ 1308
1423CT-BI	Biscuit			$ 1308
1423CT-BK	Black			$ 1628
1423CT-BO	Bone			$ 1308
1423CT-LN	Linen			$ 1308
1423CT-ME	Mexican Sand			$ 1628
1423CT-SD	Sandbar			$ 1628
1423CT-ST	Sterling Silver			$ 1628
1423CT-WH	White			$ 1273

OPTIONS

SKU	Description	MSRP
4200BRASDRSF	2” Brass Surefit Joint Shower Drain Brass drain material Snap in strainer-stainless steel No-caulk connection.	$ 48
30UPLT	Extra reinforcement for after market accessories installment. Order per wall Reinforcement is applied 30 inches and up **ONLY**,	$ 63
30UPRT	Extra reinforcement for after market accessories installment. Order per wall Reinforcement is applied 30 inches and up **ONLY**,	$ 63
30UPBK		$ 63

OPTIONS

SKU	Description	MSRP
FLATLT	Extra reinforcement for after market accessories installment. Order per wall Reinforcement is applied to flat surface areas.	$ 81
FLATRT	Extra reinforcement for after market accessories installment Order per wall Reinforcement is applied to flat surface areas.	$ 81
FLATBK	Extra reinforcement for after market accessories installment. Order per wall Reinforcement is applied to flat surface areas.	$ 81
SC	Ultra strong honeycomb reinforcement for demanding applications that require additional strength	$ 101
35RKBO	Finish repair kit - Case of 12 Available in White **(WH)**, or Bone **(BO)**,	$ 303
35RKWH		$ 303

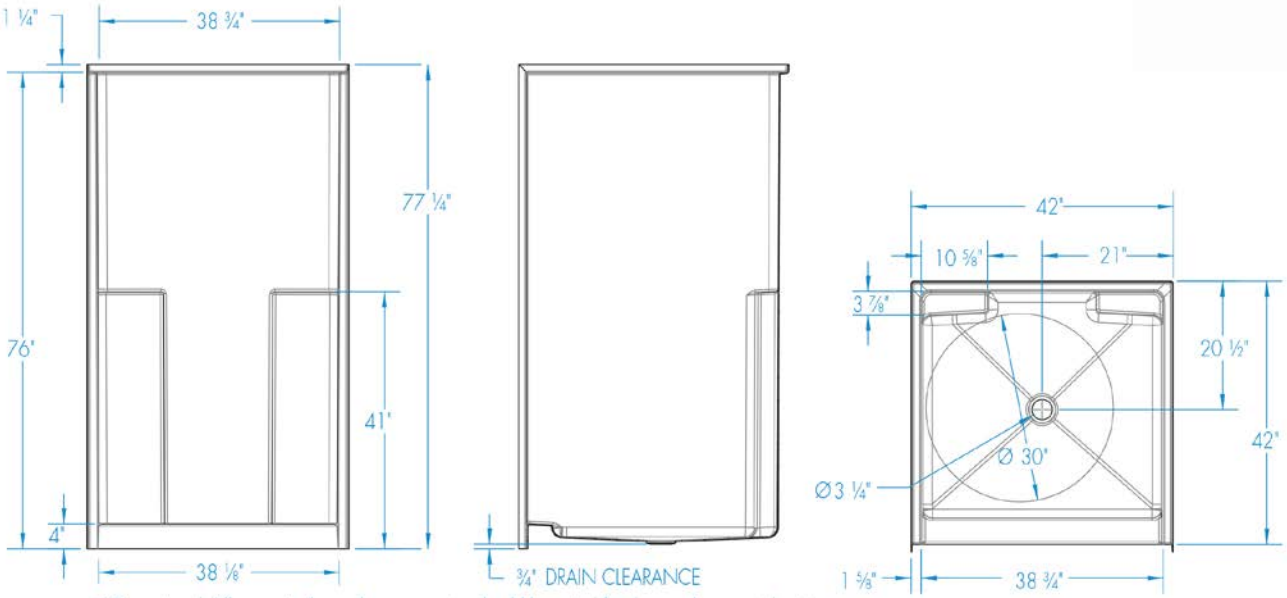

* Dimensional difference in the enclosure opening should be noted for shower door consideration.

1423CTC



Material : AcrylX™

Features

- 1-Piece Shower stall
- Textured tile finish is easy to maintain is easy to
- Molded toiletry shelves
- Slip-resistant textured floor for safety
- Center drain
- AcrylX™ applied acrylic surface

1423CTC - PRICING CATEGORY : EF

SKU	Color	Configuration	Dimensions & Weight	MSRP
1423CTC-AL	Almond	Center Drain	42” x 34” x 76” / 104 lb 1067mm x 864mm x 1930mm / 47.17 kg	$ 1291
1423CTC-BI	Biscuit			$ 1291
1423CTC-BK	Black			$ 1611
1423CTC-BO	Bone			$ 1291
1423CTC-LN	Linen			$ 1291
1423CTC-ME	Mexican Sand			$ 1611
1423CTC-SD	Sandbar			$ 1611
1423CTC-ST	Sterling Silver			$ 1611
1423CTC-WH	White			$ 1256

OPTIONS

SKU	Description	MSRP
4200BRASDRSF	2” Brass Surefit Joint Shower Drain Brass drain material Snap in strainer-stainless steel No-caulk connection.	$ 48
30UPLT	Extra reinforcement for after market accessories installment. Order per wall Reinforcement is applied 30 inches and up **ONLY**,	$ 63
30UPRT	Extra reinforcement for after market accessories installment. Order per wall Reinforcement is applied 30 inches and up **ONLY**,	$ 63
30UPBK		$ 63

OPTIONS

SKU	Description	MSRP
FLATLT	Extra reinforcement for after market accessories installment. Order per wall Reinforcement is applied to flat surface areas.	$ 81
FLATRT	Extra reinforcement for after market accessories installment Order per wall Reinforcement is applied to flat surface areas.	$ 81
FLATBK	Extra reinforcement for after market accessories installment. Order per wall Reinforcement is applied to flat surface areas.	$ 81
SC	Ultra strong honeycomb reinforcement for demanding applications that require additional strength	$ 101
35RKBO	Finish repair kit - Case of 12 Available in White **(WH)**, or Bone **(BO)**,	$ 303
35RKWH		$ 303

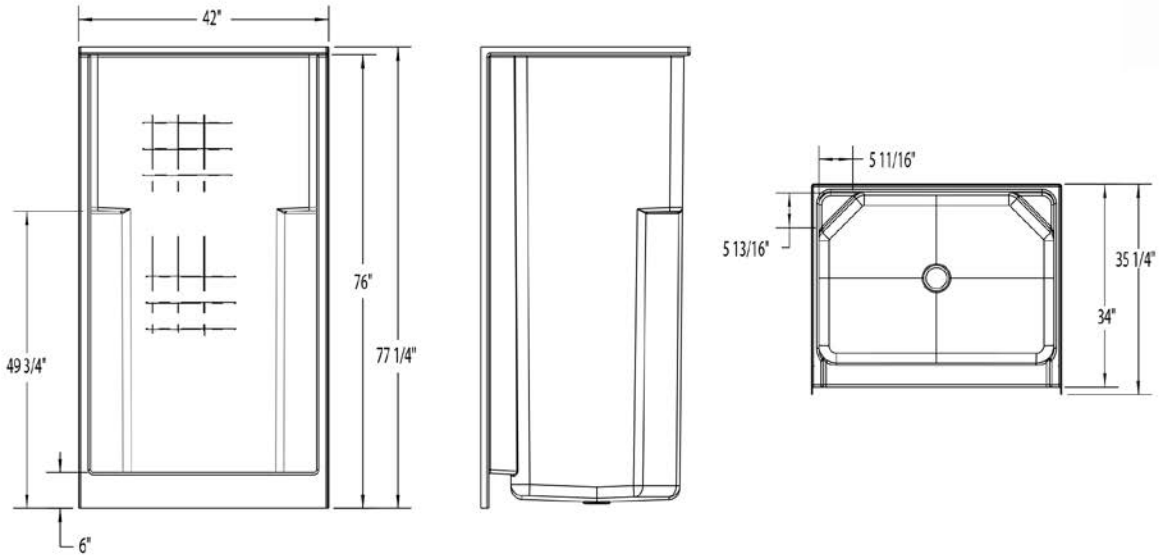
42"
76"
77 1/4"
49 3/4"
6"
5 11/16"
5 13/16"
35 1/4"
34"

1423CTT



Material : AcrylX™

Features

- 1-Piece Shower stall
- Smooth tile finish is easy to clean, no messy grout
- Molded toiletry shelves
- Center drain
- AcrylX™ applied acrylic surface

1423CTT - PRICING CATEGORY : EF

SKU	Color	Configuration	Dimensions & Weight	MSRP
1423CTT-AL	Almond	Center Drain	42” x 42” x 76” / 129 lb 1067mm x 1067mm x 1930mm / 58.5 kg	$ 1308
1423CTT-BI	Biscuit			$ 1308
1423CTT-BK	Black			$ 1628
1423CTT-BO	Bone			$ 1308
1423CTT-LN	Linen			$ 1308
1423CTT-ME	Mexican Sand			$ 1628
1423CTT-SD	Sandbar			$ 1628
1423CTT-ST	Sterling Silver			$ 1628
1423CTT-WH	White			$ 1273

OPTIONS

SKU	Description	MSRP
4200BRASDRSF	2” Brass Surefit Joint Shower Drain Brass drain material Snap in strainer-stainless steel No-caulk connection.	$ 48
30UPLT	Extra reinforcement for after market accessories installment. Order per wall Reinforcement is applied 30 inches and up **ONLY**,	$ 63
30UPRT	Extra reinforcement for after market accessories installment. Order per wall Reinforcement is applied 30 inches and up **ONLY**,	$ 63
30UPBK		$ 63

OPTIONS

SKU	Description	MSRP
FLATLT	Extra reinforcement for after market accessories installment. Order per wall Reinforcement is applied to flat surface areas.	$ 81
FLATRT	Extra reinforcement for after market accessories installment Order per wall Reinforcement is applied to flat surface areas.	$ 81
FLATBK	Extra reinforcement for after market accessories installment. Order per wall Reinforcement is applied to flat surface areas.	$ 81
SC	Ultra strong honeycomb reinforcement for demanding applications that require additional strength	$ 101
35RKBO	Finish repair kit - Case of 12 Available in White **(WH)**, or Bone **(BO)**,	$ 303
35RKWH		$ 303

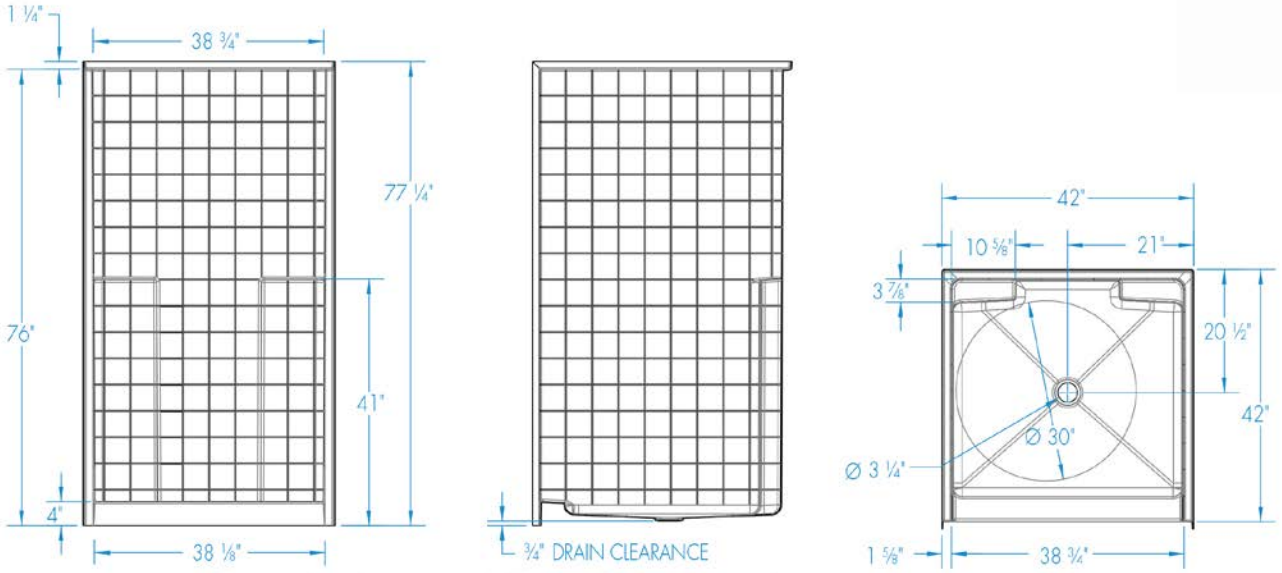

* Dimensional difference in the enclosure opening should be noted for shower door consideration.

14242STNS





Material : AcrylX™

Features

- 1-Piece Shower stall
- Simulated subway tile wall design is easy to clean with no messy grout line
- Corner design
- Molded toiletry shelves
- Slip-resistant textured floor for safety
- Center drain
- Enclosure opening: 37 Inches x 37 Inches
- AcrylX™ applied acrylic surface
- West Zone Only

14242STNS - PRICING CATEGORY : EF

SKU	Color	Configuration	Dimensions & Weight	MSRP
14242STNS-AL	Almond	Center Drain	42” x 42” x 78 5/8” / 114 lb 1067mm x 1067mm x 1997mm / 51.7 kg	$ 1220
14242STNS-BI	Biscuit			$ 1220
14242STNS-BK	Black			$ 1540
14242STNS-BO	Bone			$ 1220
14242STNS-LN	Linen			$ 1220
14242STNS-ME	Mexican Sand			$ 1540
14242STNS-SD	Sandbar			$ 1540
14242STNS-ST	Sterling Silver			$ 1540
14242STNS-WH	White			$ 1185

OPTIONS

SKU	Description	MSRP
4200BRASDRSF	2” Brass Surefit Joint Shower Drain Brass drain material Snap in strainer-stainless steel No-caulk connection.	$ 48
30UPLT	Extra reinforcement for after market accessories installment. Order per wall Reinforcement is applied 30 inches and up **ONLY**,	$ 63
30UPRT	Extra reinforcement for after market accessories installment. Order per wall Reinforcement is applied 30 inches and up **ONLY**,	$ 63
30UPBK		$ 63

OPTIONS

SKU	Description	MSRP
FLATLT	Extra reinforcement for after market accessories installment. Order per wall Reinforcement is applied to flat surface areas.	$ 81
FLATRT	Extra reinforcement for after market accessories installment Order per wall Reinforcement is applied to flat surface areas.	$ 81
FLATBK	Extra reinforcement for after market accessories installment. Order per wall Reinforcement is applied to flat surface areas.	$ 81
SC	Ultra strong honeycomb reinforcement for demanding applications that require additional strength	$ 101
35RKBO	Finish repair kit - Case of 12 Available in White **(WH)**, or Bone **(BO)**,	$ 303
35RKWH		$ 303

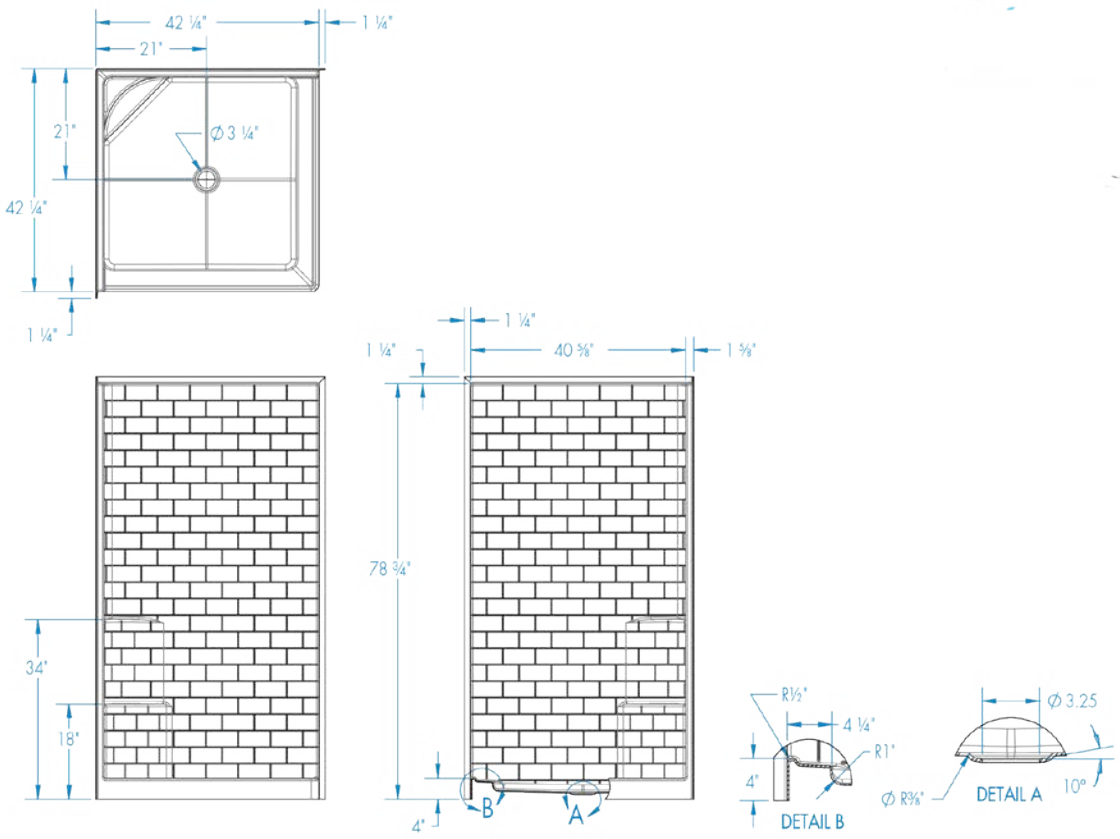
42 ¼"
1 ¼"
21"
21"
Ø 3 ¼"
42 ¼"
1 ¼"
1 ¼"
1 ¼"
40 ⅝"
1 ⅜"
78 ¾"
34"
18"
4"
B
A
R½"
4 ¼"
R1"
4"
DETAIL B
Ø R⅜"
Ø 3.25
DETAIL A
10°

14242STS





Material : AcrylX™

Features

- 1-Piece Shower stall
- Simulated subway tile wall design is easy to clean with no messy grout line
- Corner design w/seat
- Molded toiletry shelves
- Slip-resistant textured floor for safety
- Center drain
- Enclosure opening: 37 Inches x 37 Inches
- AcrylX™ applied acrylic surface
- West Zone Only

14242STS - PRICING CATEGORY : EF

SKU	Color	Configuration	Dimensions & Weight	MSRP
14242STS-AL	Almond	Center Drain	42” x 42” x 78 5/8” / 114 lb 1067mm x 1067mm x 1997mm / 51.7 kg	$ 1292
14242STS-BI	Biscuit			$ 1292
14242STS-BK	Black			$ 1612
14242STS-BO	Bone			$ 1292
14242STS-LN	Linen			$ 1292
14242STS-ME	Mexican Sand			$ 1612
14242STS-SD	Sandbar			$ 1612
14242STS-ST	Sterling Silver			$ 1612
14242STS-WH	White			$ 1257

OPTIONS

SKU	Description	MSRP
4200BRASDRSF	2” Brass Surefit Joint Shower Drain Brass drain material Snap in strainer-stainless steel No-caulk connection.	$ 48
30UPLT	Extra reinforcement for after market accessories installment. Order per wall Reinforcement is applied 30 inches and up **ONLY**,	$ 63
30UPRT	Extra reinforcement for after market accessories installment. Order per wall Reinforcement is applied 30 inches and up **ONLY**,	$ 63
30UPBK		$ 63

OPTIONS

SKU	Description	MSRP
FLATLT	Extra reinforcement for after market accessories installment. Order per wall Reinforcement is applied to flat surface areas.	$ 81
FLATRT	Extra reinforcement for after market accessories installment Order per wall Reinforcement is applied to flat surface areas.	$ 81
FLATBK	Extra reinforcement for after market accessories installment. Order per wall Reinforcement is applied to flat surface areas.	$ 81
SC	Ultra strong honeycomb reinforcement for demanding applications that require additional strength	$ 101
35RKBO	Finish repair kit - Case of 12 Available in White **(WH)**, or Bone **(BO)**,	$ 303
35RKWH		$ 303

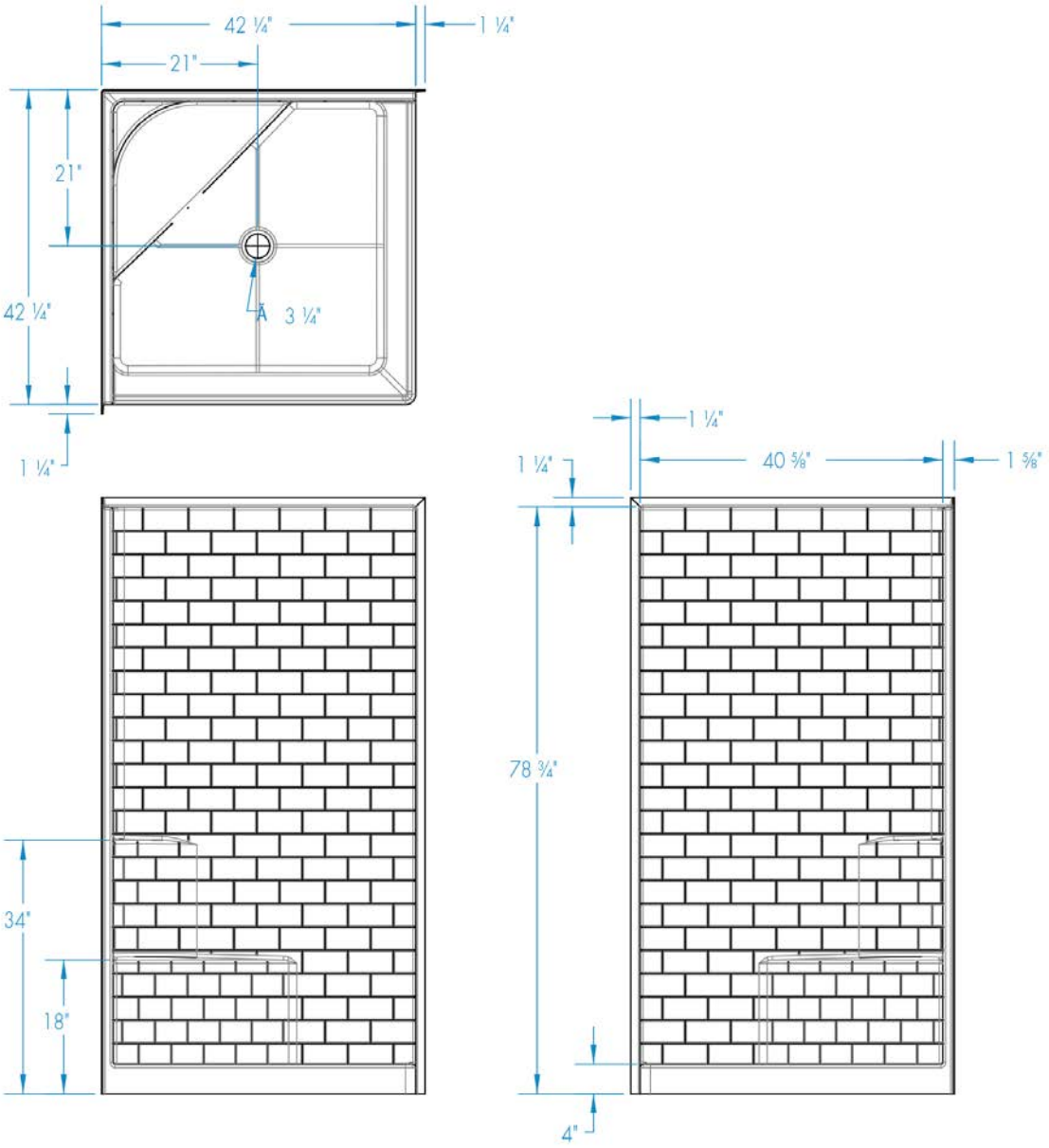
42 ¼"
1 ¼"
21"
21"
42 ¼"
3 ¼"
1 ¼"
34"
18"
1 ¼"
1 ¼"
40 ⅝"
1 ⅝"
78 ¾"
4"

14242STT



Material : AcrylX™

Features

- Center drain subway tile shower with molded soap ledge.
- Acrylx™ Applied Acrylic
- Subway tile pattern
- Molded ledge low along the back wall

14242STT - PRICING CATEGORY :

SKU	Color	Configuration	Dimensions & Weight	MSRP
14242STT-BI	Biscuit	Center Drain	42” x 43” x 80” / 128 lb 1067mm x 1092mm x 2032mm / 58.05 kg	$ 1257
14242STT-BO	Bone			$ 1257
14242STT-WH	White			$ 1257

SURFACE AREA: 79.5 sq. ft.

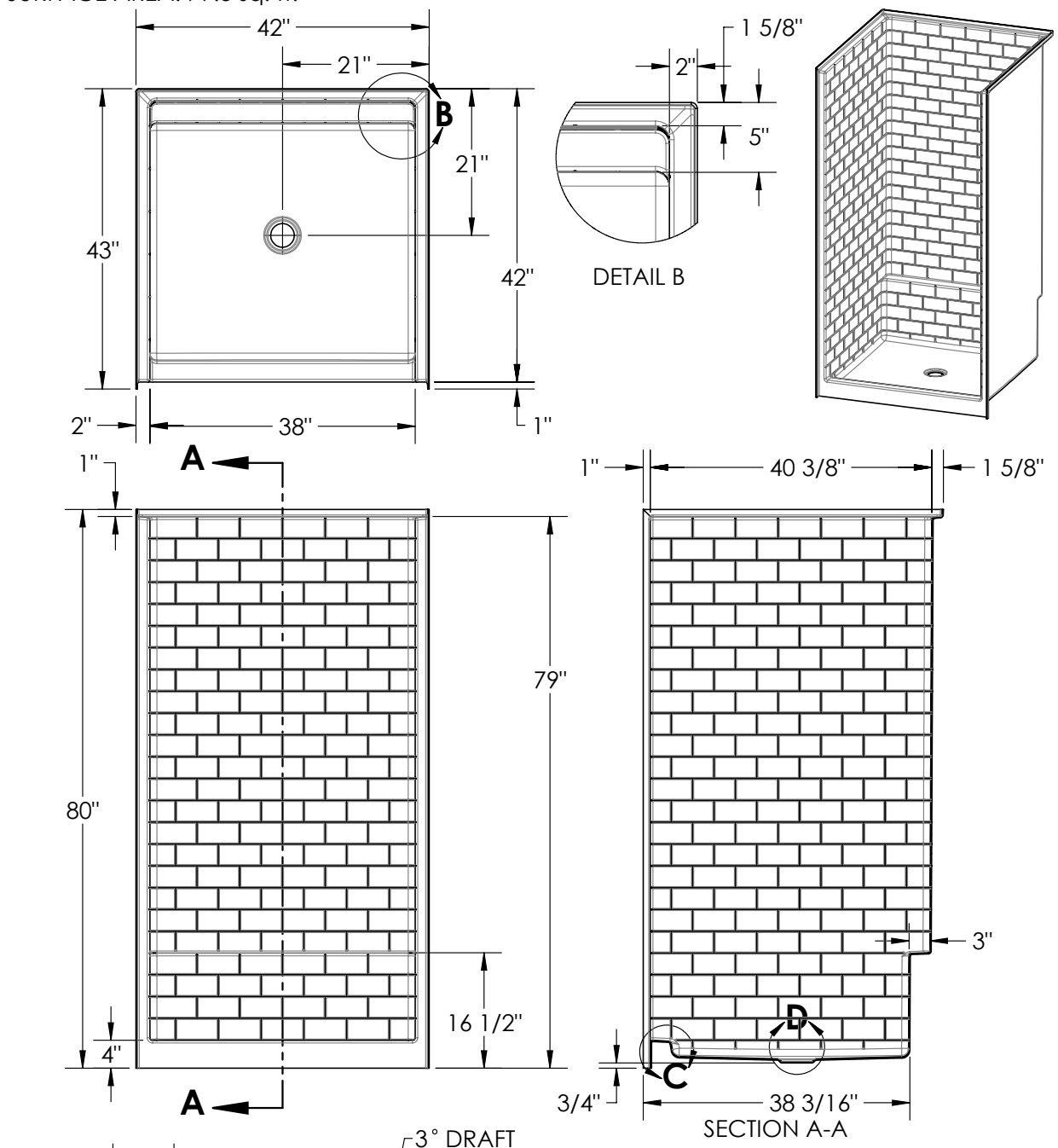

	NAME	DATE
DRAWN	P.PRIOR	1/21/2020
CHECKED		
PROD. MGR		
R&D MGR.		

COMMENT:

AQUATIC

1700 N. Delilah St.
Corona, CA 92879

TITLE: Model No. 14242STT

SIZE	DWG. NO.	ECO#
A	14242STT-S	XXXX
SCALE 1:24		SHEET 1 OF 1

The attached material and all the proprietary information of Aquatic, contained hereon is the exclusive property of Aquatic and will be treated as confidential and not copied or disclosed, except as expressly provided by written agreement with Aquatic.

File Location: C:\Users\PPrior\Desktop\4242shower\

14832P





Material : AcrylX™

Features

- 2-piece shower
- Smooth wall is easy to clean
- Integral seats
- Molded toiletry shelf
- Requires 60 Inch turning space
- Center drain
- AcrylX™ applied acrylic surface

14832P - PRICING CATEGORY : ER

SKU	Color	Configuration	Dimensions & Weight	MSRP
14832P-AL	Almond	Two seats, center drain	48” x 34” x 72” / 109 lb 1219mm x 864mm x 1829mm / 49.43 kg	$ 1321
14832P-BI	Biscuit			$ 1321
14832P-BK	Black			$ 1641
14832P-BO	Bone			$ 1321
14832P-LN	Linen			$ 1321
14832P-ME	Mexican Sand			$ 1641
14832P-SD	Sandbar			$ 1641
14832P-ST	Sterling Silver			$ 1641
14832P-WH	White			$ 1286

OPTIONS

SKU	Description	MSRP
4200BRASDRSF	2” Brass Surefit Joint Shower Drain Brass drain material Snap in strainer-stainless steel No-caulk connection.	$ 48
30UPLT	Extra reinforcement for after market accessories installment. Order per wall Reinforcement is applied 30 inches and up **ONLY**,	$ 63
30UPRT	Extra reinforcement for after market accessories installment. Order per wall Reinforcement is applied 30 inches and up **ONLY**,	$ 63
30UPBK		$ 63

OPTIONS

SKU	Description	MSRP
FLATLT	Extra reinforcement for after market accessories installment. Order per wall Reinforcement is applied to flat surface areas.	$ 81
FLATRT	Extra reinforcement for after market accessories installment Order per wall Reinforcement is applied to flat surface areas.	$ 81
FLATBK	Extra reinforcement for after market accessories installment. Order per wall Reinforcement is applied to flat surface areas.	$ 81
SC	Ultra strong honeycomb reinforcement for demanding applications that require additional strength	$ 101
35RKBO	Finish repair kit - Case of 12 Available in White **(WH)**, or Bone **(BO)**,	$ 303
35RKWH		$ 303

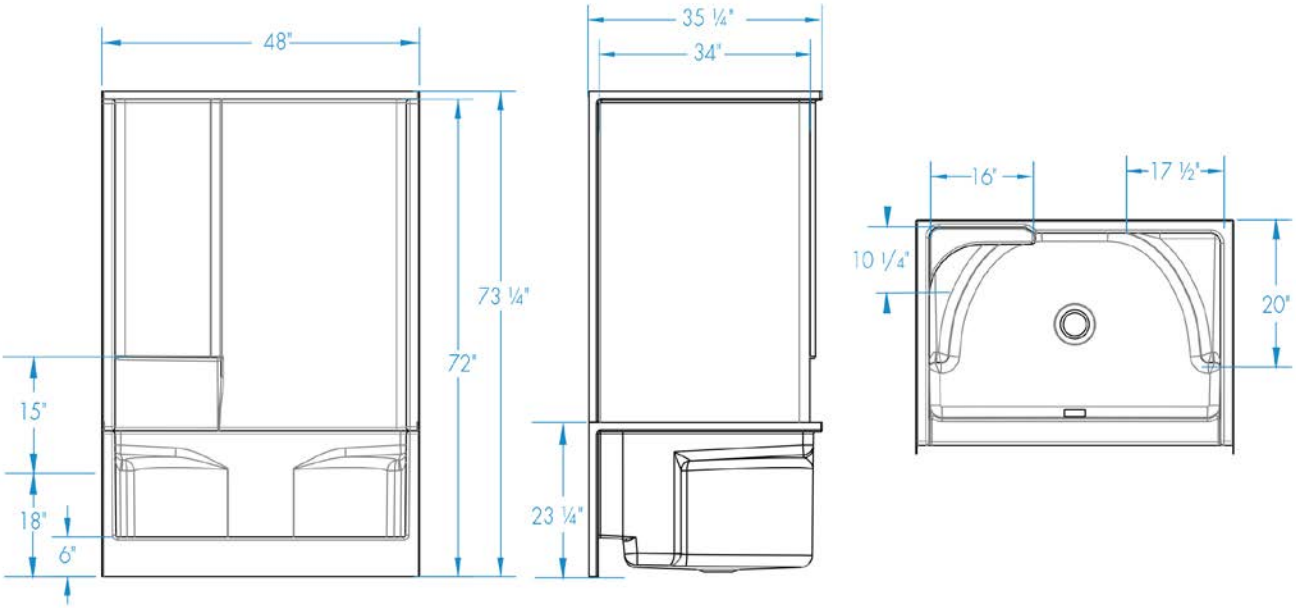
48"
73 ¼"
72"
15"
18"
6"
35 ¼"
34"
23 ¼"
16"
17 ½"
10 ¼"
20"

148344PSC



Material : AcrylX™

Features

- 4-piece shower
- Smooth wall is easy to clean
- Integral seat (left or right hand)
- Molded toiletry shelves
- Center drain
- AcrylX™ applied acrylic surface

148344PSC - PRICING CATEGORY : ER

SKU	Color	Configuration	Dimensions & Weight	MSRP
148344PSCL-AL	Almond	Left seat, center drain	48” x 34” x 76” / 156 lb 1219mm x 864mm x 1930mm / 70.75 kg	$ 1676
148344PSCL-BI	Biscuit			$ 1676
148344PSCL-BK	Black			$ 1996
148344PSCL-BO	Bone			$ 1676
148344PSCL-LN	Linen			$ 1676
148344PSCL-ME	Mexican Sand			$ 1996
148344PSCL-SD	Sandbar			$ 1996
148344PSCL-ST	Sterling Silver			$ 1996
148344PSCL-WH	White			$ 1641
148344PSCR-AL	Almond	Right seat, center drain		$ 1676
148344PSCR-BI	Biscuit			$ 1676
148344PSCR-BK	Black			$ 1996
148344PSCR-BO	Bone			$ 1676
148344PSCR-LN	Linen			$ 1676
148344PSCR-ME	Mexican Sand			$ 1996
148344PSCR-SD	Sandbar			$ 1996
148344PSCR-ST	Sterling Silver			$ 1996
148344PSCR-WH	White			$ 1641

OPTIONS

SKU	Description	MSRP
4200BRASDRSF	2” Brass Surefit Joint Shower Drain Brass drain material Snap in strainer-stainless steel No-caulk connection.	$ 48
30UPLT	Extra reinforcement for after market accessories installment. Order per wall Reinforcement is applied 30 inches and up **ONLY**,	$ 63
30UPRT	Extra reinforcement for after market accessories installment. Order per wall Reinforcement is applied 30 inches and up **ONLY**,	$ 63
30UPBK		$ 63
FLATLT	Extra reinforcement for after market accessories installment. Order per wall Reinforcement is applied to flat surface areas.	$ 81
FLATRT	Extra reinforcement for after market accessories installment Order per wall Reinforcement is applied to flat surface areas.	$ 81
FLATBK	Extra reinforcement for after market accessories installment. Order per wall Reinforcement is applied to flat surface areas.	$ 81
SC	Ultra strong honeycomb reinforcement for demanding applications that require additional strength	$ 101
35RKBO	Finish repair kit - Case of 12 Available in White **(WH)**, or Bone **(BO)**,	$ 303
35RKWH		$ 303

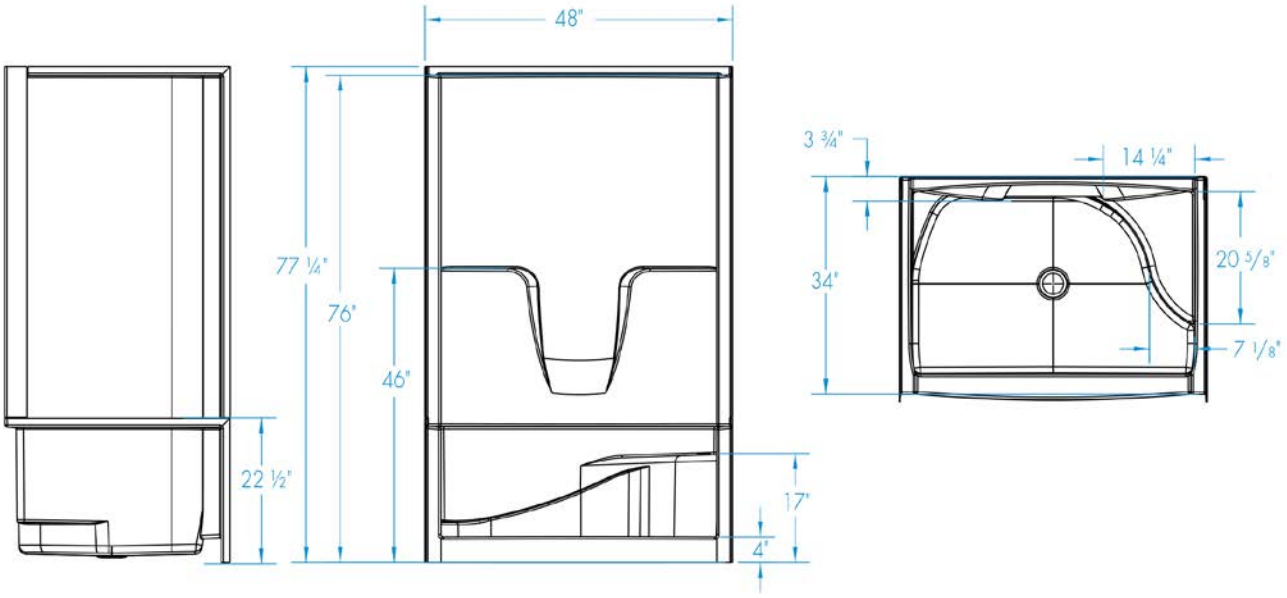
48"
77 ¼"
76"
46"
22 ½"
17"
4"
3 ¾"
14 ¼"
34"
20 5/8"
7 1/8"

14834STT





Material : AcrylX™

Features

- 1-Piece Shower stall
- Simulated subway tile wall design is easy to clean with no messy grout line
- Molded toiletry shelves
- Slip-resistant textured floor for safety
- Center drain
- AcrylX™ applied acrylic surface

14834STT - PRICING CATEGORY : EK

SKU	Color	Configuration	Dimensions & Weight	MSRP
14834STT-AL	Almond	Center Drain	48” x 34” x 80” / 119 lb 1219mm x 864mm x 2032mm / 53.97 kg	$ 1162
14834STT-BI	Biscuit			$ 1162
14834STT-BK	Black			$ 1482
14834STT-BO	Bone			$ 1162
14834STT-LN	Linen			$ 1162
14834STT-ME	Mexican Sand			$ 1482
14834STT-SD	Sandbar			$ 1482
14834STT-ST	Sterling Silver			$ 1482
14834STT-WH	White			$ 1127

OPTIONS

SKU	Description	MSRP
4200BRASDRSF	2” Brass Surefit Joint Shower Drain Brass drain material Snap in strainer-stainless steel No-caulk connection.	$ 48
30UPLT	Extra reinforcement for after market accessories installment. Order per wall Reinforcement is applied 30 inches and up **ONLY**,	$ 63
30UPRT	Extra reinforcement for after market accessories installment. Order per wall Reinforcement is applied 30 inches and up **ONLY**,	$ 63
30UPBK		$ 63

OPTIONS

SKU	Description	MSRP
FLATLT	Extra reinforcement for after market accessories installment. Order per wall Reinforcement is applied to flat surface areas.	$ 81
FLATRT	Extra reinforcement for after market accessories installment Order per wall Reinforcement is applied to flat surface areas.	$ 81
FLATBK	Extra reinforcement for after market accessories installment. Order per wall Reinforcement is applied to flat surface areas.	$ 81
SC	Ultra strong honeycomb reinforcement for demanding applications that require additional strength	$ 101
35RKBO	Finish repair kit - Case of 12 Available in White **(WH)**, or Bone **(BO)**,	$ 303
35RKWH		$ 303

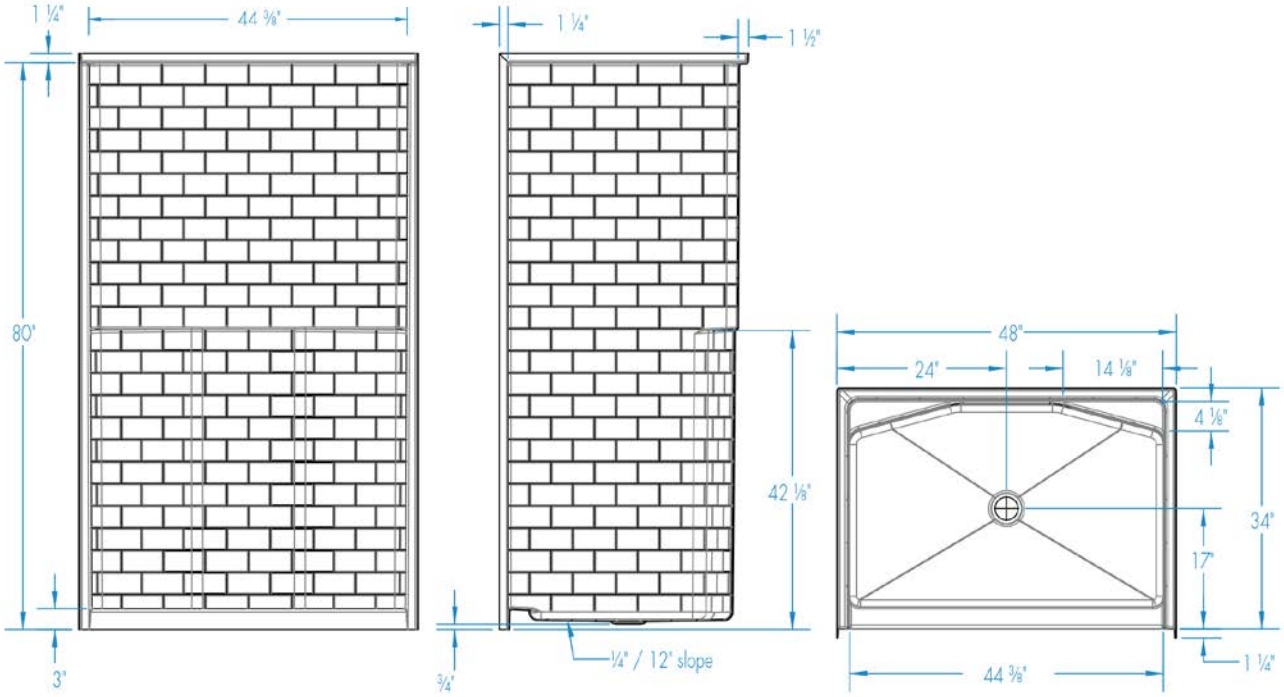
1 ¼"
44 ⅜"
80"
3"
1 ¼"
1 ½"
42 ⅛"
¾"
¼" / 12° slope
48"
24"
14 ⅛"
4 ⅛"
34"
17"
1 ¼"
44 ⅜"

1483CST





Material : AcrylX™

Features

- 1-Piece Shower stall
- Smooth wall finish is easy to clean
- Molded toiletry shelf
- Slip-resistant textured floor for safety
- Center drain
- AcrylX™ applied acrylic surface

1483CST - PRICING CATEGORY : EF

SKU	Color	Configuration	Dimensions & Weight	MSRP
1483CST-AL	Almond	Center Drain	48” x 34” x 76” / 126 lb 1219mm x 864mm x 1930mm / 57.14 kg	$ 1376
1483CST-BI	Biscuit			$ 1376
1483CST-BK	Black			$ 1696
1483CST-BO	Bone			$ 1376
1483CST-LN	Linen			$ 1376
1483CST-ME	Mexican Sand			$ 1696
1483CST-SD	Sandbar			$ 1696
1483CST-ST	Sterling Silver			$ 1696
1483CST-WH	White			$ 1341

OPTIONS

SKU	Description	MSRP
4200BRASDRSF	2” Brass Surefit Joint Shower Drain Brass drain material Snap in strainer-stainless steel No-caulk connection.	$ 48
30UPLT	Extra reinforcement for after market accessories installment. Order per wall Reinforcement is applied 30 inches and up **ONLY**,	$ 63
30UPRT	Extra reinforcement for after market accessories installment. Order per wall Reinforcement is applied 30 inches and up **ONLY**,	$ 63
30UPBK		$ 63

OPTIONS

SKU	Description	MSRP
FLATLT	Extra reinforcement for after market accessories installment. Order per wall Reinforcement is applied to flat surface areas.	$ 81
FLATRT	Extra reinforcement for after market accessories installment Order per wall Reinforcement is applied to flat surface areas.	$ 81
FLATBK	Extra reinforcement for after market accessories installment. Order per wall Reinforcement is applied to flat surface areas.	$ 81
35RKBO	Finish repair kit - Case of 12 Available in White **(WH)**, or Bone **(BO)**,	$ 303
35RKWH		$ 303

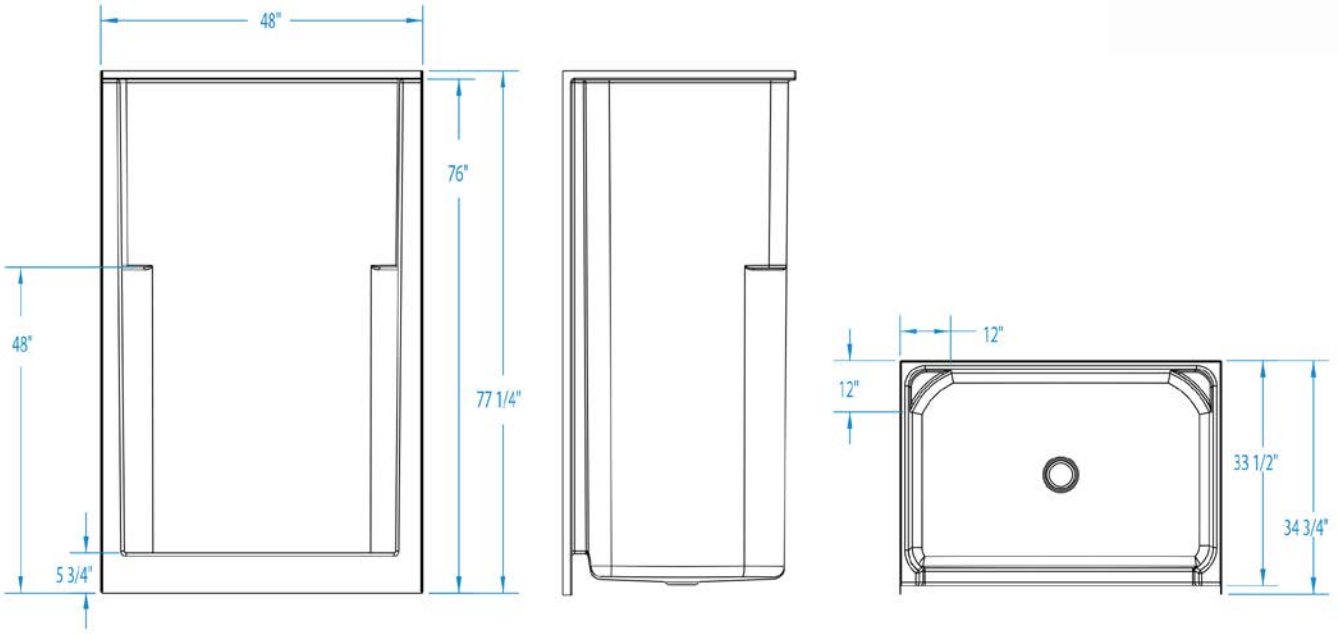
48"
76"
48"
77 1/4"
5 3/4"
12"
12"
33 1/2"
34 3/4"

1483CTGNM AFR





Material : AcrylX™

Features

- 1-Piece Shower stall
- Textured tile finish is easy to maintain
- Molded seats (2)
- Molded toiletry shelves
- This AFR unit accommodates the installation of drain above the floor
- Slip-resistant textured floor for safety
- Center drain
- AcrylX™ applied acrylic surface`

1483CTGNM AFR - PRICING CATEGORY : EF

SKU	Color	Configuration	Dimensions & Weight	MSRP
1483CTGNM-AL	Almond	Two seats, center drain	48” x 35” x 79” / 109 lb 1219mm x 889mm x 2007mm / 49.43 kg	$ 1355
1483CTGNM-BI	Biscuit			$ 1355
1483CTGNM-BK	Black			$ 1675
1483CTGNM-BO	Bone			$ 1355
1483CTGNM-LN	Linen			$ 1355
1483CTGNM-ME	Mexican Sand			$ 1675
1483CTGNM-SD	Sandbar			$ 1675
1483CTGNM-ST	Sterling Silver			$ 1675
1483CTGNM-WH	White			$ 1320

OPTIONS

SKU	Description	MSRP
4200BRASDRSF	2” Brass Surefit Joint Shower Drain Brass drain material Snap in strainer-stainless steel No-caulk connection.	$ 48
30UPLT	Extra reinforcement for after market accessories installment. Order per wall Reinforcement is applied 30 inches and up **ONLY**,	$ 63
30UPRT	Extra reinforcement for after market accessories installment. Order per wall Reinforcement is applied 30 inches and up **ONLY**,	$ 63
30UPBK		$ 63

OPTIONS

SKU	Description	MSRP
FLATLT	Extra reinforcement for after market accessories installment. Order per wall Reinforcement is applied to flat surface areas.	$ 81
FLATRT	Extra reinforcement for after market accessories installment Order per wall Reinforcement is applied to flat surface areas.	$ 81
FLATBK	Extra reinforcement for after market accessories installment. Order per wall Reinforcement is applied to flat surface areas.	$ 81
SC	Ultra strong honeycomb reinforcement for demanding applications that require additional strength	$ 101
35RKBO	Finish repair kit - Case of 12 Available in White **(WH)**, or Bone **(BO)**,	$ 303
35RKWH		$ 303

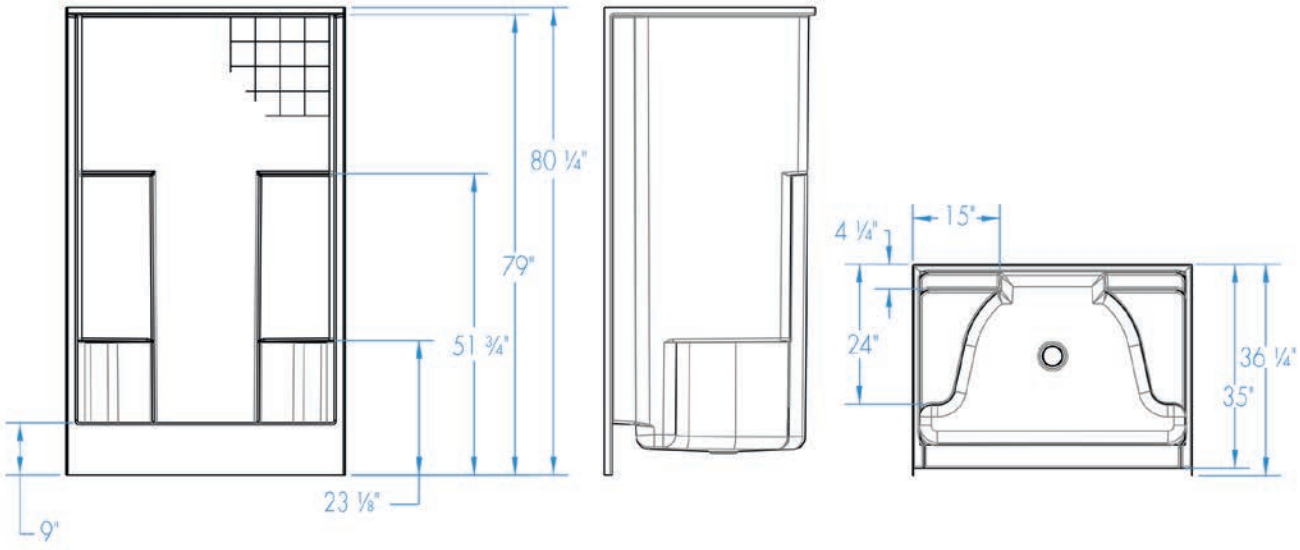
80 ¼"
79"
51 ¾"
23 ⅛"
9"
4 ¼"
15"
24"
36 ¼"
35"

1483DTS





Material : AcrylX™

Features

- 1-Piece Shower stall
- Decorative diagonal tile design is easy to clean
- Molded seat (Left or right hand
- Molded toiletry shelves
- Slip-resistant textured floor for safety
- Center drain
- AcrylX™ applied acrylic surface

1483DTS - PRICING CATEGORY : EF

SKU	Color	Configuration	Dimensions & Weight	MSRP
1483DTSL-AL	Almond	Left seat, center drain	48” x 36” x 76” / 114 lb 1219mm x 914mm x 1930mm / 51.7 kg	$ 1369
1483DTSL-BI	Biscuit			$ 1369
1483DTSL-BK	Black			$ 1689
1483DTSL-BO	Bone			$ 1369
1483DTSL-LN	Linen			$ 1369
1483DTSL-ME	Mexican Sand			$ 1689
1483DTSL-SD	Sandbar			$ 1689
1483DTSL-ST	Sterling Silver			$ 1689
1483DTSL-WH	White			$ 1334
1483DTSR-AL	Almond	Right seat, center drain		$ 1369
1483DTSR-BI	Biscuit			$ 1369
1483DTSR-BK	Black			$ 1689
1483DTSR-BO	Bone			$ 1369
1483DTSR-LN	Linen			$ 1369
1483DTSR-ME	Mexican Sand			$ 1689
1483DTSR-SD	Sandbar			$ 1689
1483DTSR-ST	Sterling Silver			$ 1689
1483DTSR-WH	White			$ 1334

OPTIONS

SKU	Description	MSRP
4200BRASDRSF	2” Brass Surefit Joint Shower Drain Brass drain material Snap in strainer-stainless steel No-caulk connection.	$ 48
30UPLT	Extra reinforcement for after market accessories installment. Order per wall Reinforcement is applied 30 inches and up **ONLY**,	$ 63
30UPRT	Extra reinforcement for after market accessories installment. Order per wall Reinforcement is applied 30 inches and up **ONLY**,	$ 63
30UPBK		$ 63
FLATLT	Extra reinforcement for after market accessories installment. Order per wall Reinforcement is applied to flat surface areas.	$ 81
FLATRT	Extra reinforcement for after market accessories installment Order per wall Reinforcement is applied to flat surface areas.	$ 81
FLATBK	Extra reinforcement for after market accessories installment. Order per wall Reinforcement is applied to flat surface areas.	$ 81
SC	Ultra strong honeycomb reinforcement for demanding applications that require additional strength	$ 101
35RKBO	Finish repair kit - Case of 12 Available in White **(WH)**, or Bone **(BO)**,	$ 303
35RKWH		$ 303

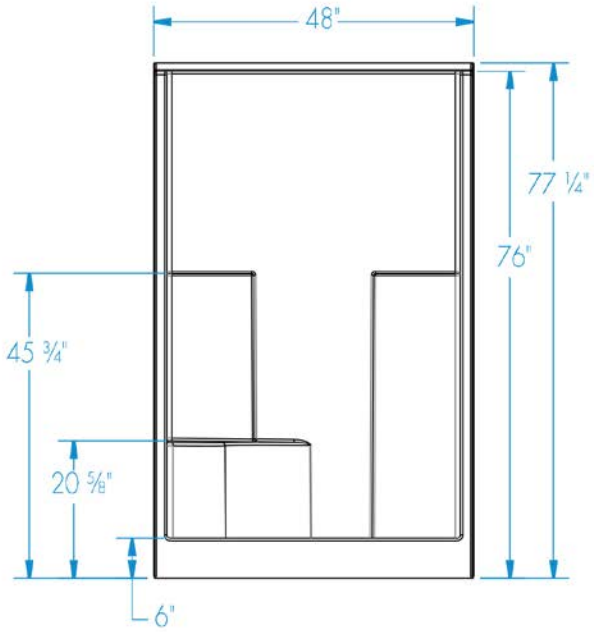
48"
77 ¼"
76"
45 ¾"
20 ⅝"
6"

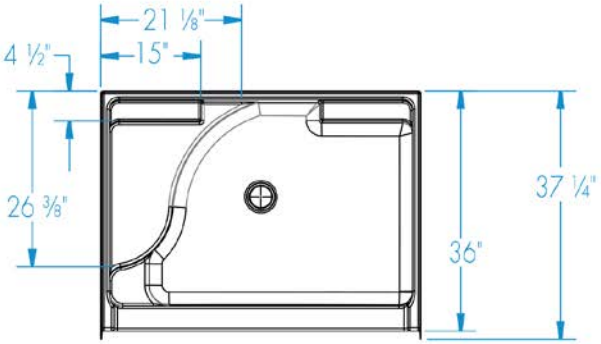
21 ⅛"
15"
4 ½"
26 ⅜"
36"
37 ¼"

1483DTSM AFR





Material : AcrylX™

Features

- 1-Piece Shower stall
- Decorative diagonal tile design is easy to clean
- Molded seat (Left or right hand)
- Molded toiletry shelves
- This AFR unit accommodates the installation of drain above the floor
- Slip-resistant textured floor for safety
- Center drain
- AcrylX™ applied acrylic surface

1483DTSM AFR - PRICING CATEGORY : EF

SKU	Color	Configuration	Dimensions & Weight	MSRP
1483DTSML-AL	Almond	Left seat, center drain	48” x 36” x 79” / 114 lb 1219mm x 914mm x 2007mm / 51.7 kg	$ 1436
1483DTSML-BI	Biscuit			$ 1436
1483DTSML-BK	Black			$ 1756
1483DTSML-BO	Bone			$ 1436
1483DTSML-LN	Linen			$ 1436
1483DTSML-ME	Mexican Sand			$ 1756
1483DTSML-SD	Sandbar			$ 1756
1483DTSML-ST	Sterling Silver			$ 1756
1483DTSML-WH	White			$ 1401
1483DTSMR-AL	Almond	Right seat, center drain		$ 1436
1483DTSMR-BI	Biscuit			$ 1436
1483DTSMR-BK	Black			$ 1756
1483DTSMR-LN	Linen			$ 1436
1483DTSMR-ME	Mexican Sand			$ 1756
1483DTSMR-SD	Sandbar			$ 1756
1483DTSMR-ST	Sterling Silver			$ 1756
1483DTSMR-WH	White			$ 1401

OPTIONS

SKU	Description	MSRP
4200BRASDRSF	2” Brass Surefit Joint Shower Drain Brass drain material Snap in strainer-stainless steel No-caulk connection.	$ 48
30UPLT	Extra reinforcement for after market accessories installment. Order per wall Reinforcement is applied 30 inches and up **ONLY**,	$ 63
30UPRT	Extra reinforcement for after market accessories installment. Order per wall Reinforcement is applied 30 inches and up **ONLY**,	$ 63
30UPBK		$ 63
FLATLT	Extra reinforcement for after market accessories installment. Order per wall Reinforcement is applied to flat surface areas.	$ 81
FLATRT	Extra reinforcement for after market accessories installment Order per wall Reinforcement is applied to flat surface areas.	$ 81
FLATBK	Extra reinforcement for after market accessories installment. Order per wall Reinforcement is applied to flat surface areas.	$ 81
SC	Ultra strong honeycomb reinforcement for demanding applications that require additional strength	$ 101
35RKBO	Finish repair kit - Case of 12 Available in White **(WH)**, or Bone **(BO)**,	$ 303
35RKWH		$ 303

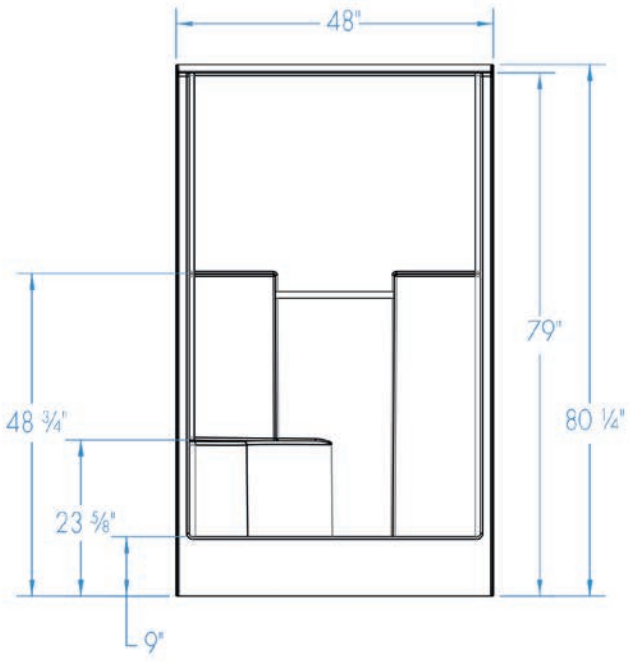
48"
79"
80 ¼"
48 ¾"
23 ⅝"
9"

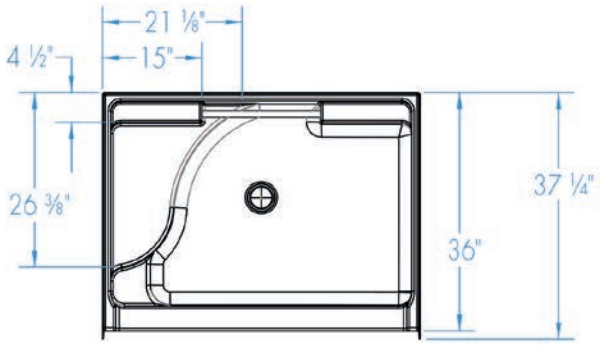
21 ⅛"
15"
4 ½"
26 ⅜"
36"
37 ¼"

1483NTRI



Material : AcrylX™

Features

- 3-piece shower
- Smooth wall is easy to clean
- Molded toiletry shelf
- Center drain
- AcrylX™ applied acrylic surface

1483NTRI - PRICING CATEGORY : ER

SKU	Color	Configuration	Dimensions & Weight	MSRP
1483NTRI-AL	Almond	Center Drain	48” x 34” x 72 3/4” / 116 lb 1219mm x 864mm x 1848mm / 52.61 kg	$ 1361
1483NTRI-BI	Biscuit			$ 1361
1483NTRI-BK	Black			$ 1681
1483NTRI-BO	Bone			$ 1361
1483NTRI-LN	Linen			$ 1361
1483NTRI-ME	Mexican Sand			$ 1681
1483NTRI-SD	Sandbar			$ 1681
1483NTRI-ST	Sterling Silver			$ 1681
1483NTRI-WH	White			$ 1326

OPTIONS

SKU	Description	MSRP
4200BRASDRSF	2” Brass Surefit Joint Shower Drain Brass drain material Snap in strainer-stainless steel No-caulk connection.	$ 48
30UPLT	Extra reinforcement for after market accessories installment. Order per wall Reinforcement is applied 30 inches and up **ONLY**,	$ 63
30UPRT	Extra reinforcement for after market accessories installment. Order per wall Reinforcement is applied 30 inches and up **ONLY**,	$ 63
30UPBK		$ 63

OPTIONS

SKU	Description	MSRP
FLATLT	Extra reinforcement for after market accessories installment. Order per wall Reinforcement is applied to flat surface areas.	$ 81
FLATRT	Extra reinforcement for after market accessories installment Order per wall Reinforcement is applied to flat surface areas.	$ 81
FLATBK	Extra reinforcement for after market accessories installment. Order per wall Reinforcement is applied to flat surface areas.	$ 81
SC	Ultra strong honeycomb reinforcement for demanding applications that require additional strength	$ 101
35RKBO	Finish repair kit - Case of 12 Available in White **(WH)**, or Bone **(BO)**,	$ 303
35RKWH		$ 303

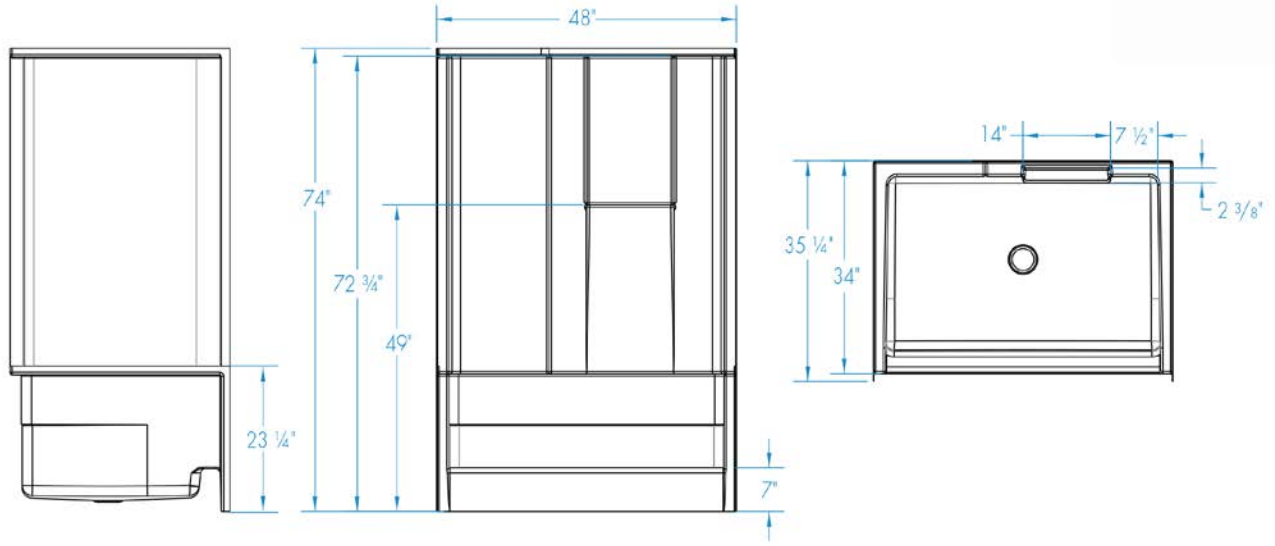
48"
74"
72 ¾"
49"
23 ¼"
7"
14"
7 ½"
2 ⅜"
35 ¼"
34"

1483OS



Material : AcrylX™

Features

- 1-Piece Shower stall
- Smooth wall finish is easy to clean
- Molded seat (Left or right hand)
- Molded toiletry shelf
- Slip-resistant textured floor for safety
- Center drain
- AcrylX™ applied acrylic surface

1483OS - PRICING CATEGORY : EF

SKU	Color	Configuration	Dimensions & Weight	MSRP
1483OSL-AL	Almond	Left seat, center drain	48” x 34” x 72” / 115 lb 1219mm x 864mm x 1829mm / 52.15 kg	$ 1329
1483OSL-BI	Biscuit			$ 1329
1483OSL-BK	Black			$ 1649
1483OSL-BO	Bone			$ 1329
1483OSL-LN	Linen			$ 1329
1483OSL-ME	Mexican Sand			$ 1649
1483OSL-SD	Sandbar			$ 1649
1483OSL-ST	Sterling Silver			$ 1649
1483OSL-WH	White			$ 1294
1483OSR-AL	Almond	Right seat, center drain		$ 1329
1483OSR-BI	Biscuit			$ 1329
1483OSR-BK	Black			$ 1649
1483OSR-BO	Bone			$ 1329
1483OSR-LN	Linen			$ 1329
1483OSR-ME	Mexican Sand			$ 1649
1483OSR-SD	Sandbar			$ 1649
1483OSR-ST	Sterling Silver			$ 1649
1483OSR-WH	White			$ 1294

OPTIONS

SKU	Description	MSRP
4200BRASDRSF	2” Brass Surefit Joint Shower Drain Brass drain material Snap in strainer-stainless steel No-caulk connection.	$ 48
30UPLT	Extra reinforcement for after market accessories installment. Order per wall Reinforcement is applied 30 inches and up **ONLY**,	$ 63
30UPRT	Extra reinforcement for after market accessories installment. Order per wall Reinforcement is applied 30 inches and up **ONLY**,	$ 63
30UPBK		$ 63
FLATLT	Extra reinforcement for after market accessories installment. Order per wall Reinforcement is applied to flat surface areas.	$ 81
FLATRT	Extra reinforcement for after market accessories installment Order per wall Reinforcement is applied to flat surface areas.	$ 81
FLATBK	Extra reinforcement for after market accessories installment. Order per wall Reinforcement is applied to flat surface areas.	$ 81
35RKBO	Finish repair kit - Case of 12 Available in White **(WH)**, or Bone **(BO)**,	$ 303
35RKWH		$ 303

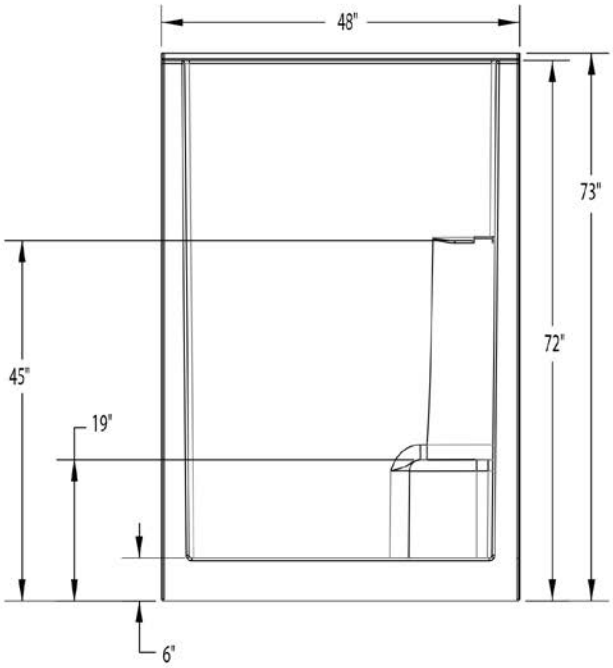
48"
73"
72"
45"
19"
6"

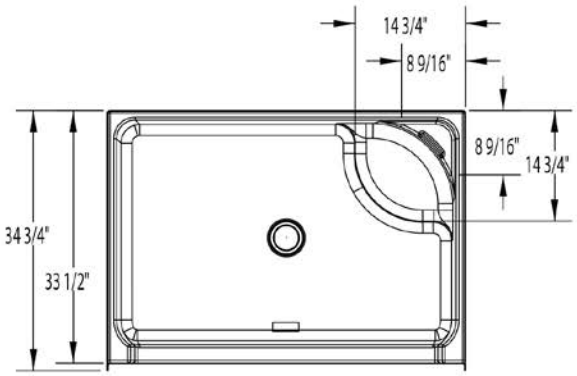
14 3/4"
8 9/16"
8 9/16"
14 3/4"
34 3/4"
33 1/2"

1483OSM AFR



Material : AcrylX™

Features

- 1-Piece Shower stall
- Smooth wall finish is easy to clean
- Molded seat (Left or right hand)
- This AFR unit accommodates the installation of drain above the floor
- Slip-resistant textured floor for safety
- Center drain
- AcrylX™ applied acrylic surface

1483OSM AFR - PRICING CATEGORY : EF

SKU	Color	Configuration	Dimensions & Weight	MSRP
1483OSML-AL	Almond	Left seat, center drain	48” x 34” x 75” / 115 lb 1219mm x 864mm x 1905mm / 52.15 kg	$ 1390
1483OSML-BI	Biscuit			$ 1390
1483OSML-BK	Black			$ 1710
1483OSML-BO	Bone			$ 1390
1483OSML-LN	Linen			$ 1390
1483OSML-ME	Mexican Sand			$ 1710
1483OSML-SD	Sandbar			$ 1710
1483OSML-ST	Sterling Silver			$ 1710
1483OSML-WH	White			$ 1355
1483OSMR-AL	Almond	Right seat, center drain		$ 1390
1483OSMR-BI	Biscuit			$ 1390
1483OSMR-BK	Black			$ 1710
1483OSMR-BO	Bone			$ 1390
1483OSMR-LN	Linen			$ 1390
1483OSMR-ME	Mexican Sand			$ 1710
1483OSMR-SD	Sandbar			$ 1710
1483OSMR-ST	Sterling Silver			$ 1710
1483OSMR-WH	White			$ 1355

OPTIONS

SKU	Description	MSRP
30UPLT	Extra reinforcement for after market accessories installment. Order per wall Reinforcement is applied 30 inches and up **ONLY**,	$ 63
30UPRT	Extra reinforcement for after market accessories installment. Order per wall Reinforcement is applied 30 inches and up **ONLY**,	$ 63
30UPBK	Extra reinforcement for after market accessories installment. Order per wall Reinforcement is applied 30 inches and up **ONLY**,	$ 63
FLATLT	Extra reinforcement for after market accessories installment. Order per wall Reinforcement is applied to flat surface areas.	$ 81
FLATRT	Extra reinforcement for after market accessories installment Order per wall Reinforcement is applied to flat surface areas.	$ 81
FLATBK	Extra reinforcement for after market accessories installment. Order per wall Reinforcement is applied to flat surface areas.	$ 81
35RKBO	Finish repair kit - Case of 12 Available in White **(WH)**, or Bone **(BO)**,	$ 303
35RKWH		$ 303

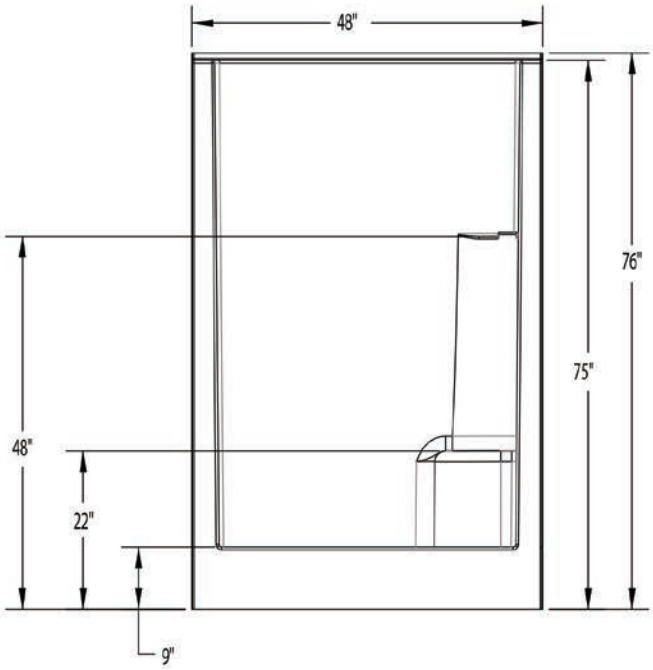
48"
76"
75"
48"
22"
9"

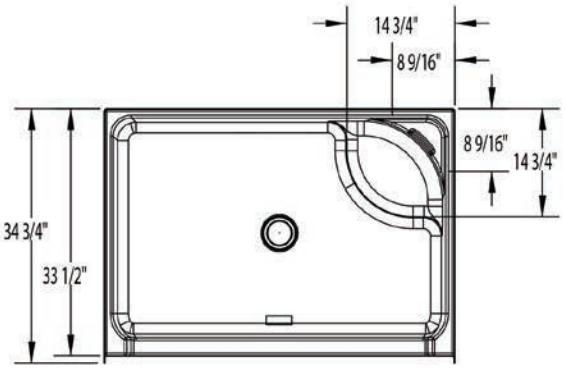
14 3/4"
8 9/16"
8 9/16"
14 3/4"
34 3/4"
33 1/2"

1483OST





Material : AcrylX™

Features

- 1-Piece Shower stall
- Smooth wall finish is easy to clean
- Molded seat (Left or right hand)
- Molded toiletry shelf
- Slip-resistant textured floor for safety
- Center drain
- AcrylX™ applied acrylic surface
- East Zone Only

1483OST - PRICING CATEGORY : EF

SKU	Color	Configuration	Dimensions & Weight	MSRP
1483OSTL-AL	Almond	Left seat, center drain	48” x 34” x 78” / 122 lb 1219mm x 864mm x 1981mm / 55.33 kg	$ 1382
1483OSTL-BI	Biscuit			$ 1382
1483OSTL-BK	Black			$ 1702
1483OSTL-BO	Bone			$ 1382
1483OSTL-LN	Linen			$ 1382
1483OSTL-ME	Mexican Sand			$ 1702
1483OSTL-SD	Sandbar			$ 1702
1483OSTL-ST	Sterling Silver			$ 1702
1483OSTL-WH	White			$ 1347
1483OSTR-AL	Almond	Right seat, center drain		$ 1382
1483OSTR-BI	Biscuit			$ 1382
1483OSTR-BK	Black			$ 1702
1483OSTR-BO	Bone			$ 1382
1483OSTR-LN	Linen			$ 1382
1483OSTR-ME	Mexican Sand			$ 1702
1483OSTR-SD	Sandbar			$ 1702
1483OSTR-ST	Sterling Silver			$ 1702
1483OSTR-WH	White			$ 1347

OPTIONS

SKU	Description	MSRP
4200BRASDRSF	2” Brass Surefit Joint Shower Drain Brass drain material Snap in strainer-stainless steel No-caulk connection.	$ 48
30UPLT	Extra reinforcement for after market accessories installment. Order per wall Reinforcement is applied 30 inches and up **ONLY**,	$ 63
30UPRT	Extra reinforcement for after market accessories installment. Order per wall Reinforcement is applied 30 inches and up **ONLY**,	$ 63
30UPBK		$ 63
FLATLT	Extra reinforcement for after market accessories installment. Order per wall Reinforcement is applied to flat surface areas.	$ 81
FLATRT	Extra reinforcement for after market accessories installment Order per wall Reinforcement is applied to flat surface areas.	$ 81
FLATBK	Extra reinforcement for after market accessories installment. Order per wall Reinforcement is applied to flat surface areas.	$ 81
SC	Ultra strong honeycomb reinforcement for demanding applications that require additional strength	$ 101
35RKBO	Finish repair kit - Case of 12 Available in White **(WH)**, or Bone **(BO)**,	$ 303
35RKWH		$ 303

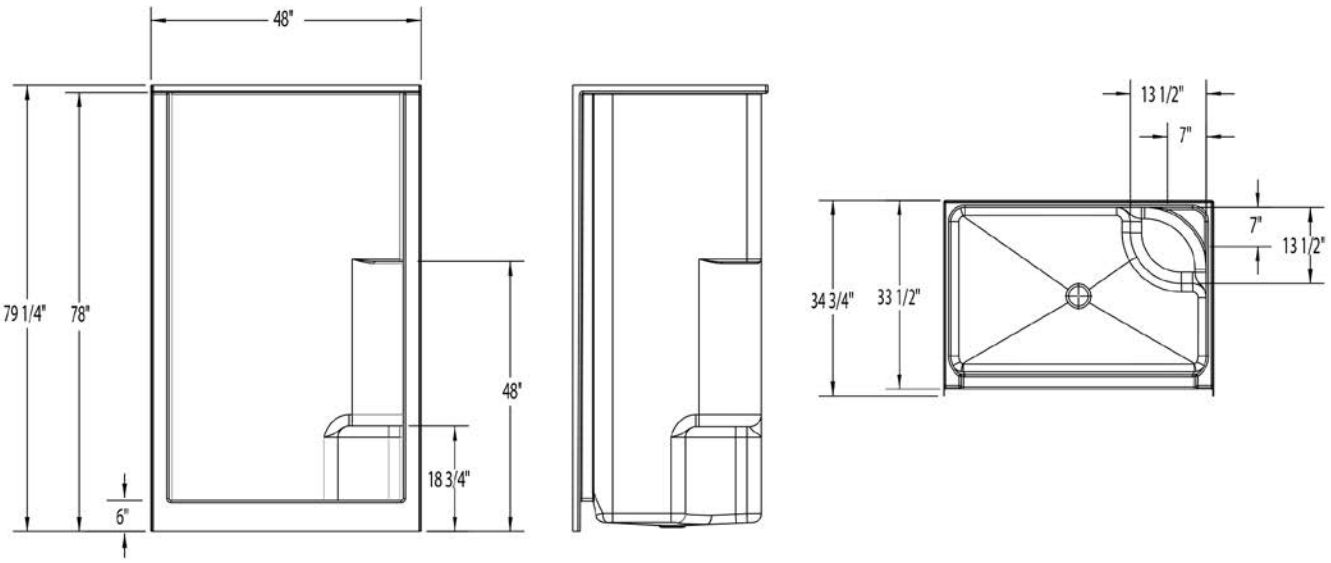
48"
79 1/4"
78"
48"
18 3/4"
6"
13 1/2"
7"
34 3/4"
33 1/2"
7"
13 1/2"

1483SG





Material : AcrylX™

Features

- 1-Piece Shower stall
- Smooth wall finish is easy to clean
- Molded seats (2)
- Molded toiletry shelves
- Slip-resistant textured floor for safety
- Center drain
- AcrylX™ applied acrylic surface

1483SG - PRICING CATEGORY : EF

SKU	Color	Configuration	Dimensions & Weight	MSRP
1483SG-AL	Almond	Two seats, center drain	48” x 35” x 72” / 109 lb 1219mm x 889mm x 1829mm / 49.43 kg	$ 1267
1483SG-BI	Biscuit			$ 1267
1483SG-BK	Black			$ 1587
1483SG-BO	Bone			$ 1267
1483SG-LN	Linen			$ 1267
1483SG-ME	Mexican Sand			$ 1587
1483SG-SD	Sandbar			$ 1587
1483SG-ST	Sterling Silver			$ 1587
1483SG-WH	White			$ 1232

OPTIONS

SKU	Description	MSRP
4200BRASDRSF	2” Brass Surefit Joint Shower Drain Brass drain material Snap in strainer-stainless steel No-caulk connection.	$ 48
30UPLT	Extra reinforcement for after market accessories installment. Order per wall Reinforcement is applied 30 inches and up **ONLY**,	$ 63
30UPRT	Extra reinforcement for after market accessories installment. Order per wall Reinforcement is applied 30 inches and up **ONLY**,	$ 63
30UPBK		$ 63

OPTIONS

SKU	Description	MSRP
FLATLT	Extra reinforcement for after market accessories installment. Order per wall Reinforcement is applied to flat surface areas.	$ 81
FLATRT	Extra reinforcement for after market accessories installment Order per wall Reinforcement is applied to flat surface areas.	$ 81
FLATBK	Extra reinforcement for after market accessories installment. Order per wall Reinforcement is applied to flat surface areas.	$ 81
SC	Ultra strong honeycomb reinforcement for demanding applications that require additional strength	$ 101
35RKBO	Finish repair kit - Case of 12 Available in White **(WH)**, or Bone **(BO)**,	$ 303
35RKWH		$ 303

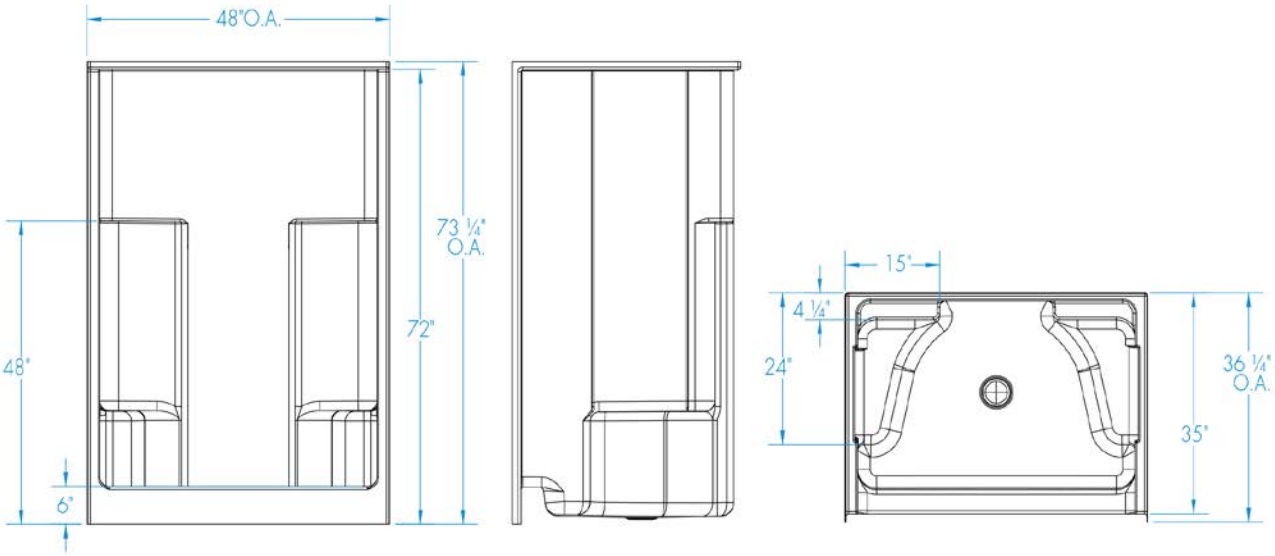
48"O.A.
73 ¼"
O.A.
72"
48"
6"
15"
4 ¼"
24"
36 ¼"
O.A.
35"

1483SGM AFR





Material : AcrylX™

Features

- 1-Piece Shower stall
- Smooth wall finish is easy to clean
- Molded seats (2)
- Molded toiletry shelves
- This AFR unit accommodates the installation of drain above the floor
- Slip-resistant textured floor for safety
- Center drain
- AcrylX™ applied acrylic surface

1483SGM AFR - PRICING CATEGORY : EF

SKU	Color	Configuration	Dimensions & Weight	MSRP
1483SGM-AL	Almond	Two seats, center drain	48” x 35” x 75” / 106 lb 1219mm x 889mm x 1905mm / 48.07 kg	$ 1329
1483SGM-BI	Biscuit			$ 1329
1483SGM-BK	Black			$ 1649
1483SGM-BO	Bone			$ 1329
1483SGM-LN	Linen			$ 1329
1483SGM-ME	Mexican Sand			$ 1649
1483SGM-SD	Sandbar			$ 1649
1483SGM-ST	Sterling Silver			$ 1649
1483SGM-WH	White			$ 1294

OPTIONS

SKU	Description	MSRP
4200BRASDRSF	2” Brass Surefit Joint Shower Drain Brass drain material Snap in strainer-stainless steel No-caulk connection.	$ 48
30UPLT	Extra reinforcement for after market accessories installment. Order per wall Reinforcement is applied 30 inches and up **ONLY**,	$ 63
30UPRT	Extra reinforcement for after market accessories installment. Order per wall Reinforcement is applied 30 inches and up **ONLY**,	$ 63
30UPBK		$ 63

OPTIONS

SKU	Description	MSRP
FLATLT	Extra reinforcement for after market accessories installment. Order per wall Reinforcement is applied to flat surface areas.	$ 81
FLATRT	Extra reinforcement for after market accessories installment Order per wall Reinforcement is applied to flat surface areas.	$ 81
FLATBK	Extra reinforcement for after market accessories installment. Order per wall Reinforcement is applied to flat surface areas.	$ 81
SC	Ultra strong honeycomb reinforcement for demanding applications that require additional strength	$ 101
35RKBO	Finish repair kit - Case of 12 Available in White **(WH)**, or Bone **(BO)**,	$ 303
35RKWH		$ 303

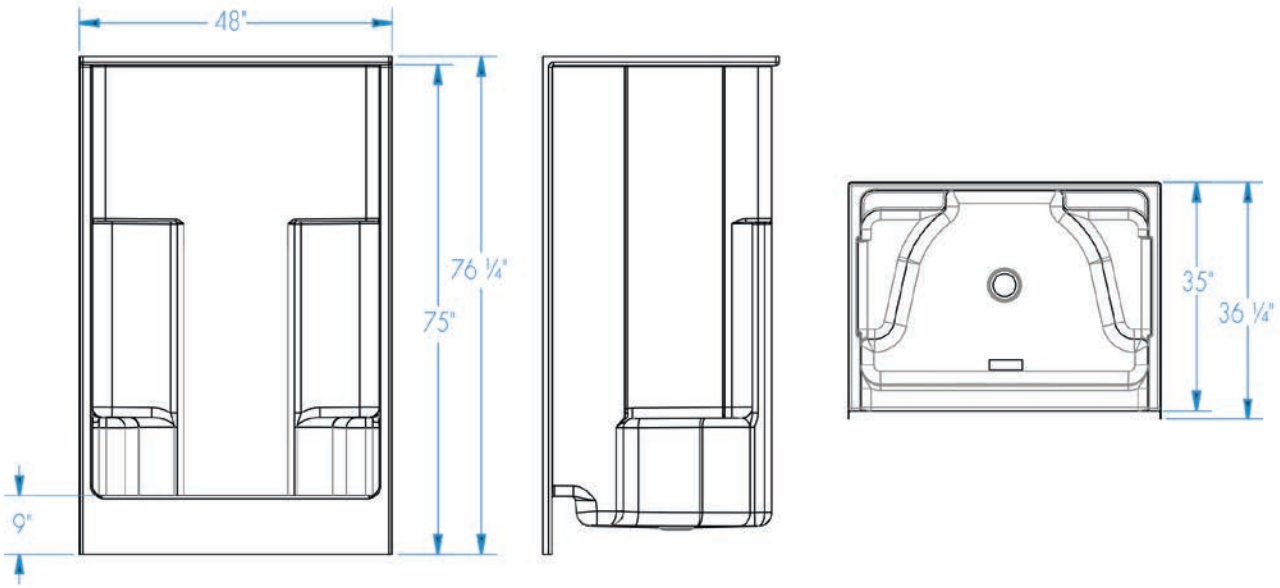
48"
76 ¼"
75"
9"
35"
36 ¼"

1483STS





Material : AcrylX™

Features

- 1-Piece Shower stall
- Smooth wall finish is easy to clean
- Integral toiletry shelves
- Slip resistant, textured bottom
- Left or right single seat
- Center drain
- AcrylX™ applied acrylic surface
- East zone only

1483STS - PRICING CATEGORY : EF

SKU	Color	Configuration	Dimensions & Weight	MSRP
1483STSL-AL	Almond	Left seat, center drain	48” x 36” x 76” / 114 lb 1219mm x 914mm x 1930mm / 51.7 kg	$ 1329
1483STSL-BI	Biscuit			$ 1329
1483STSL-BK	Black			$ 1649
1483STSL-BO	Bone			$ 1329
1483STSL-LN	Linen			$ 1329
1483STSL-ME	Mexican Sand			$ 1649
1483STSL-SD	Sandbar			$ 1649
1483STSL-ST	Sterling Silver			$ 1649
1483STSL-WH	White			$ 1294
1483STSR-AL	Almond	Right seat, center drain		$ 1329
1483STSR-BI	Biscuit			$ 1329
1483STSR-BK	Black			$ 1649
1483STSR-BO	Bone			$ 1329
1483STSR-LN	Linen			$ 1329
1483STSR-ME	Mexican Sand			$ 1649
1483STSR-WH	White			$ 1294

OPTIONS

SKU	Description	MSRP
4200BRASDRSF	2” Brass Surefit Joint Shower Drain Brass drain material Snap in strainer-stainless steel No-caulk connection.	$ 48
30UPLT	Extra reinforcement for after market accessories installment. Order per wall Reinforcement is applied 30 inches and up **ONLY**,	$ 63
30UPRT	Extra reinforcement for after market accessories installment. Order per wall Reinforcement is applied 30 inches and up **ONLY**,	$ 63
30UPBK		$ 63
FLATLT	Extra reinforcement for after market accessories installment. Order per wall Reinforcement is applied to flat surface areas.	$ 81
FLATRT	Extra reinforcement for after market accessories installment Order per wall Reinforcement is applied to flat surface areas.	$ 81
FLATBK	Extra reinforcement for after market accessories installment. Order per wall Reinforcement is applied to flat surface areas.	$ 81
35RKBO	Finish repair kit - Case of 12 Available in White **(WH)**, or Bone **(BO)**,	$ 303
35RKWH		$ 303

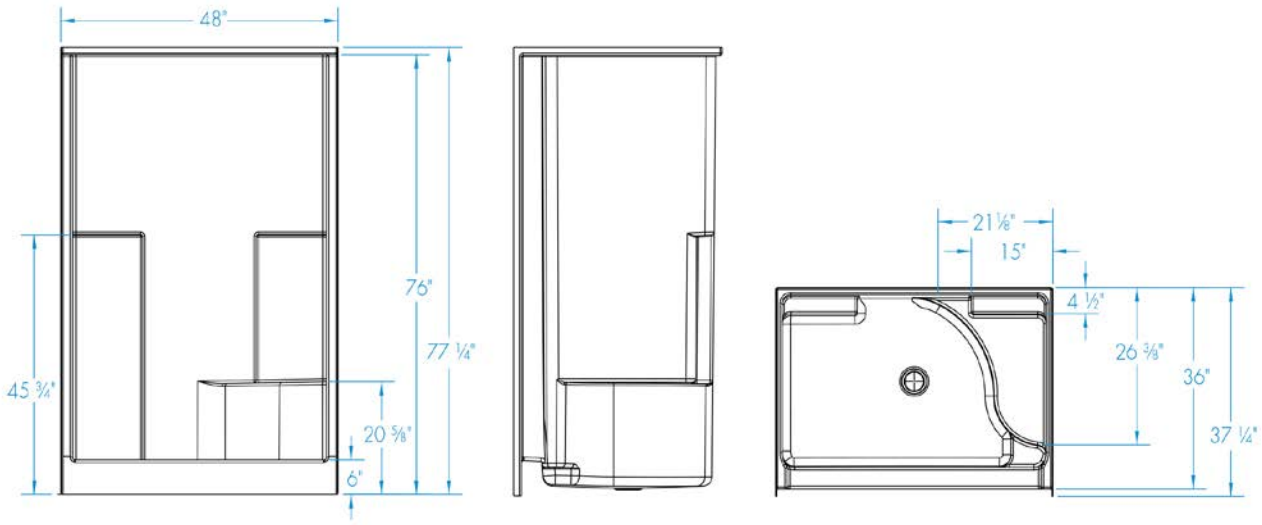
48"
76"
77 ¼"
45 ¾"
20 ⅝"
6"
21⅛"
15"
4 ½"
26 ⅜"
36"
37 ¼"

1483STSM AFR





Material : AcrylX™

Features

- 1-Piece Shower stall
- Smooth wall finish is easy to clean
- This AFR unit accommodates the installation of drain above the floor
- Integral toiletry shelves
- Slip resistant, textured bottom
- Left or right single seat
- Center drain
- AcrylX™ applied acrylic surface
- East zone only

1483STSM AFR - PRICING CATEGORY : EF

SKU	Color	Configuration	Dimensions & Weight	MSRP
1483STSML-AL	Almond	Left seat, center drain	48” x 36” x 79” / 116 lb 1219mm x 914mm x 2007mm / 52.61 kg	$ 1390
1483STSML-BI	Biscuit			$ 1390
1483STSML-BK	Black			$ 1710
1483STSML-BO	Bone			$ 1390
1483STSML-LN	Linen			$ 1390
1483STSML-ME	Mexican Sand			$ 1710
1483STSML-SD	Sandbar			$ 1710
1483STSML-ST	Sterling Silver			$ 1710
1483STSML-WH	White			$ 1355
1483STSMR-AL	Almond	Right seat, center drain		$ 1390
1483STSMR-BI	Biscuit			$ 1390
1483STSMR-BK	Black			$ 1710
1483STSMR-BO	Bone			$ 1390
1483STSMR-LN	Linen			$ 1390
1483STSMR-ME	Mexican Sand			$ 1710
1483STSMR-SD	Sandbar			$ 1710
1483STSMR-ST	Sterling Silver			$ 1710
1483STSMR-WH	White			$ 1355

OPTIONS

SKU	Description	MSRP
4200BRASDRSF	2” Brass Surefit Joint Shower Drain Brass drain material Snap in strainer-stainless steel No-caulk connection.	$ 48
30UPLT	Extra reinforcement for after market accessories installment. Order per wall Reinforcement is applied 30 inches and up **ONLY**,	$ 63
30UPRT	Extra reinforcement for after market accessories installment. Order per wall Reinforcement is applied 30 inches and up **ONLY**,	$ 63
30UPBK		$ 63
FLATLT	Extra reinforcement for after market accessories installment. Order per wall Reinforcement is applied to flat surface areas.	$ 81
FLATRT	Extra reinforcement for after market accessories installment Order per wall Reinforcement is applied to flat surface areas.	$ 81
FLATBK	Extra reinforcement for after market accessories installment. Order per wall Reinforcement is applied to flat surface areas.	$ 81
35RKBO	Finish repair kit - Case of 12 Available in White **(WH)**, or Bone **(BO)**,	$ 303
35RKWH		$ 303

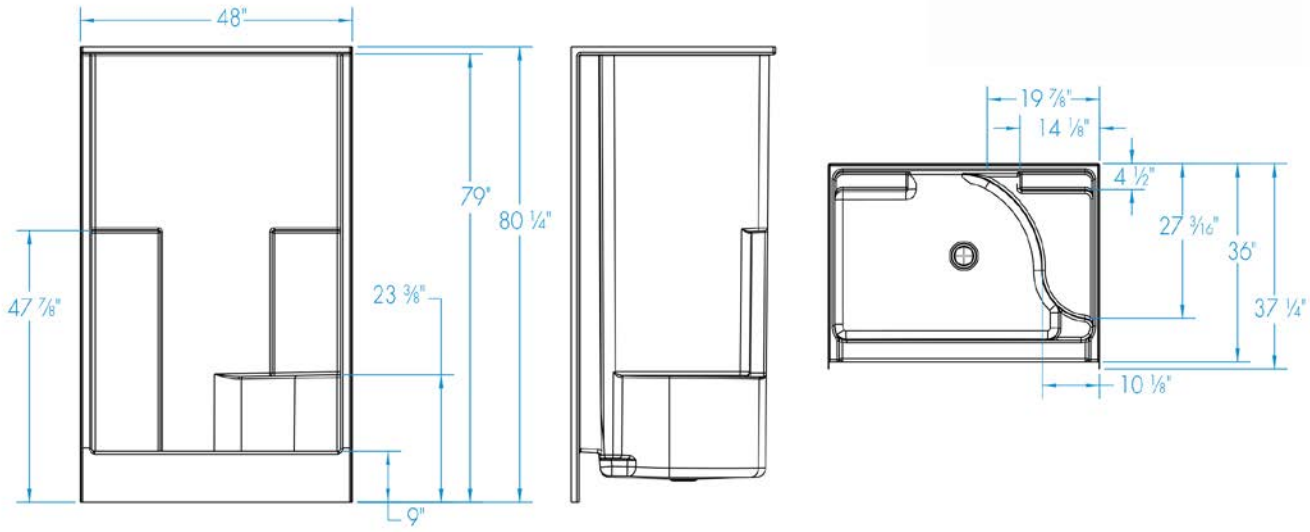
48"
79"
80 ¼"
47 ⅞"
23 ⅜"
9"
19 ⅞"
14 ⅛"
4 ½"
27 3/16"
36"
37 ¼"
10 ⅛"

1483STT



Material : AcrylX™

Features

- 1-Piece Shower stall
- Smooth tile finish is easy to clean, no messy grout
- Molded seat (Left or right hand)
- Molded toiletry shelves
- Center drain
- AcrylX™ applied acrylic surface

1483STT - PRICING CATEGORY : EF

SKU	Color	Configuration	Dimensions & Weight	MSRP
1483STTL-AL	Almond	Left seat, center drain	48” x 35” x 76” / 114 lb 1219mm x 889mm x 1930mm / 51.7 kg	$ 1358
1483STTL-BI	Biscuit			$ 1358
1483STTL-BK	Black			$ 1678
1483STTL-BO	Bone			$ 1358
1483STTL-LN	Linen			$ 1358
1483STTL-ME	Mexican Sand			$ 1678
1483STTL-SD	Sandbar			$ 1678
1483STTL-ST	Sterling Silver			$ 1678
1483STTL-WH	White			$ 1323
1483STTR-AL	Almond	Right seat, center drain		$ 1358
1483STTR-BI	Biscuit			$ 1358
1483STTR-BK	Black			$ 1678
1483STTR-BO	Bone			$ 1358
1483STTR-LN	Linen			$ 1358
1483STTR-ME	Mexican Sand			$ 1678
1483STTR-SD	Sandbar			$ 1678
1483STTR-ST	Sterling Silver			$ 1678
1483STTR-WH	White			$ 1323

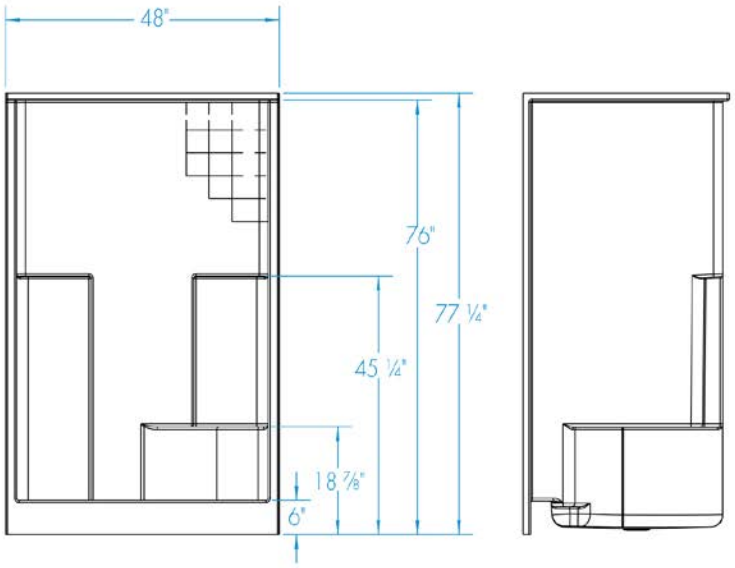
48"
76"
77 ¼"
45 ¼"
18 ⅞"
6"

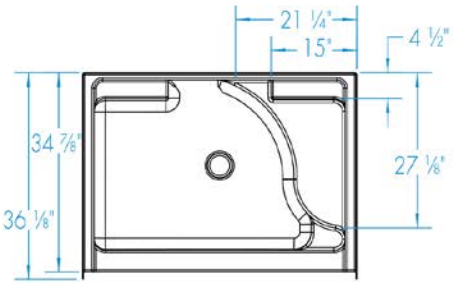
21 ¼"
15"
4 ½"
34 ⅞"
36 ⅛"
27 ⅛"

1543CTN



Material : AcrylX™

Features

- 1-Piece Shower stall
- Textured tile finish is easy to maintain
- Molded toiletry shelves
- Space saving design (Not listed by IAPMO or FHA)
- Slip-resistant textured floor for safety
- Center drain
- AcrylX™ applied acrylic surface

1543CTN - PRICING CATEGORY : EF

SKU	Color	Configuration	Dimensions & Weight	MSRP
1543CTN-AL	Almond	Center Drain	54” x 28” x 72” / 103 lb 1372mm x 711mm x 1829mm / 46.71 kg	$ 1303
1543CTN-BI	Biscuit			$ 1303
1543CTN-BK	Black			$ 1623
1543CTN-BO	Bone			$ 1303
1543CTN-LN	Linen			$ 1303
1543CTN-ME	Mexican Sand			$ 1623
1543CTN-SD	Sandbar			$ 1623
1543CTN-ST	Sterling Silver			$ 1623
1543CTN-WH	White			$ 1268

OPTIONS

SKU	Description	MSRP
4200BRASDRSF	2” Brass Surefit Joint Shower Drain Brass drain material Snap in strainer-stainless steel No-caulk connection.	$ 48
30UPLT	Extra reinforcement for after market accessories installment. Order per wall Reinforcement is applied 30 inches and up **ONLY**,	$ 63
30UPRT	Extra reinforcement for after market accessories installment. Order per wall Reinforcement is applied 30 inches and up **ONLY**,	$ 63
30UPBK		$ 63

OPTIONS

SKU	Description	MSRP
FLATLT	Extra reinforcement for after market accessories installment. Order per wall Reinforcement is applied to flat surface areas.	$ 81
FLATRT	Extra reinforcement for after market accessories installment Order per wall Reinforcement is applied to flat surface areas.	$ 81
FLATBK	Extra reinforcement for after market accessories installment. Order per wall Reinforcement is applied to flat surface areas.	$ 81
SC	Ultra strong honeycomb reinforcement for demanding applications that require additional strength	$ 101
35RKBO	Finish repair kit - Case of 12 Available in White **(WH)**, or Bone **(BO)**,	$ 303
35RKWH		$ 303

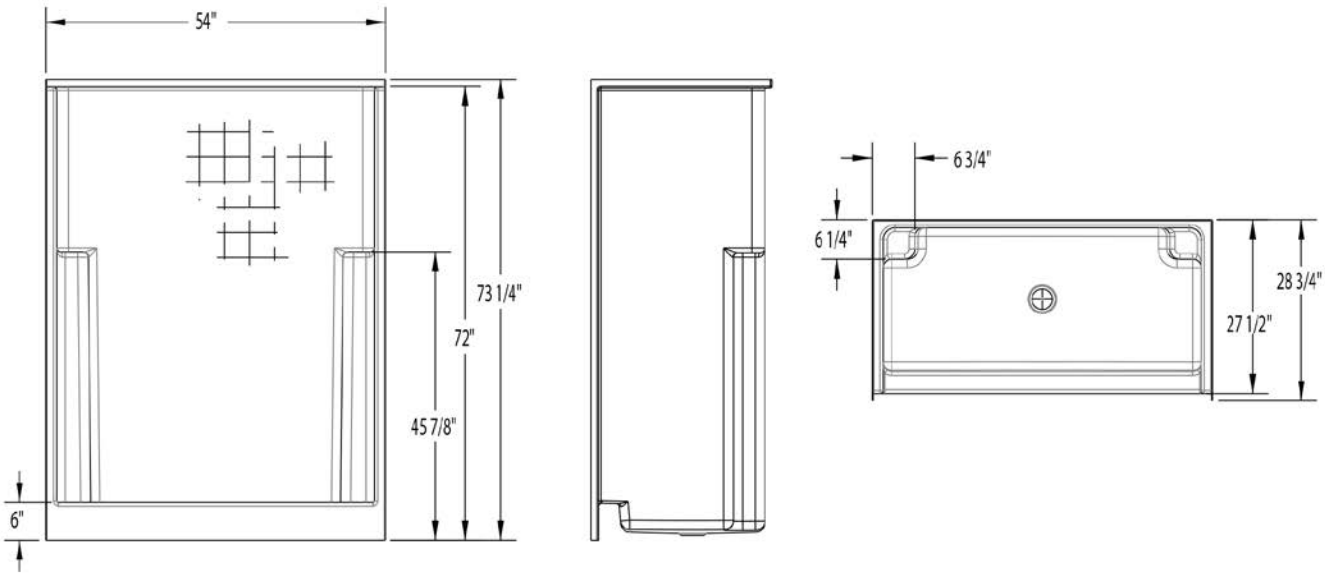
54"
73 1/4"
72"
45 7/8"
6"
6 3/4"
6 1/4"
28 3/4"
27 1/2"

1543SG





Material : AcrylX™

Features

- 1-Piece Shower stall
- Smooth wall finish is easy to clean
- Molded seats (2)
- Molded toiletry shelves
- Slip-resistant textured floor for safety
- Center drain
- AcrylX™ applied acrylic surface

1543SG - PRICING CATEGORY : EF

SKU	Color	Configuration	Dimensions & Weight	MSRP
1543SG-AL	Almond	Two seats, center drain	54” x 35” x 72” / 114 lb 1372mm x 889mm x 1829mm / 51.7 kg	$ 1309
1543SG-BI	Biscuit			$ 1309
1543SG-BK	Black			$ 1629
1543SG-BO	Bone			$ 1309
1543SG-LN	Linen			$ 1309
1543SG-ME	Mexican Sand			$ 1629
1543SG-SD	Sandbar			$ 1629
1543SG-ST	Sterling Silver			$ 1629
1543SG-WH	White			$ 1274

OPTIONS

SKU	Description	MSRP
4200BRASDRSF	2” Brass Surefit Joint Shower Drain Brass drain material Snap in strainer-stainless steel No-caulk connection.	$ 48
30UPLT	Extra reinforcement for after market accessories installment. Order per wall Reinforcement is applied 30 inches and up **ONLY**,	$ 63
30UPRT	Extra reinforcement for after market accessories installment. Order per wall Reinforcement is applied 30 inches and up **ONLY**,	$ 63
30UPBK		$ 63

OPTIONS

SKU	Description	MSRP
FLATLT	Extra reinforcement for after market accessories installment. Order per wall Reinforcement is applied to flat surface areas.	$ 81
FLATRT	Extra reinforcement for after market accessories installment Order per wall Reinforcement is applied to flat surface areas.	$ 81
FLATBK	Extra reinforcement for after market accessories installment. Order per wall Reinforcement is applied to flat surface areas.	$ 81
SC	Ultra strong honeycomb reinforcement for demanding applications that require additional strength	$ 101
35RKBO	Finish repair kit - Case of 12 Available in White **(WH)**, or Bone **(BO)**,	$ 303
35RKWH		$ 303

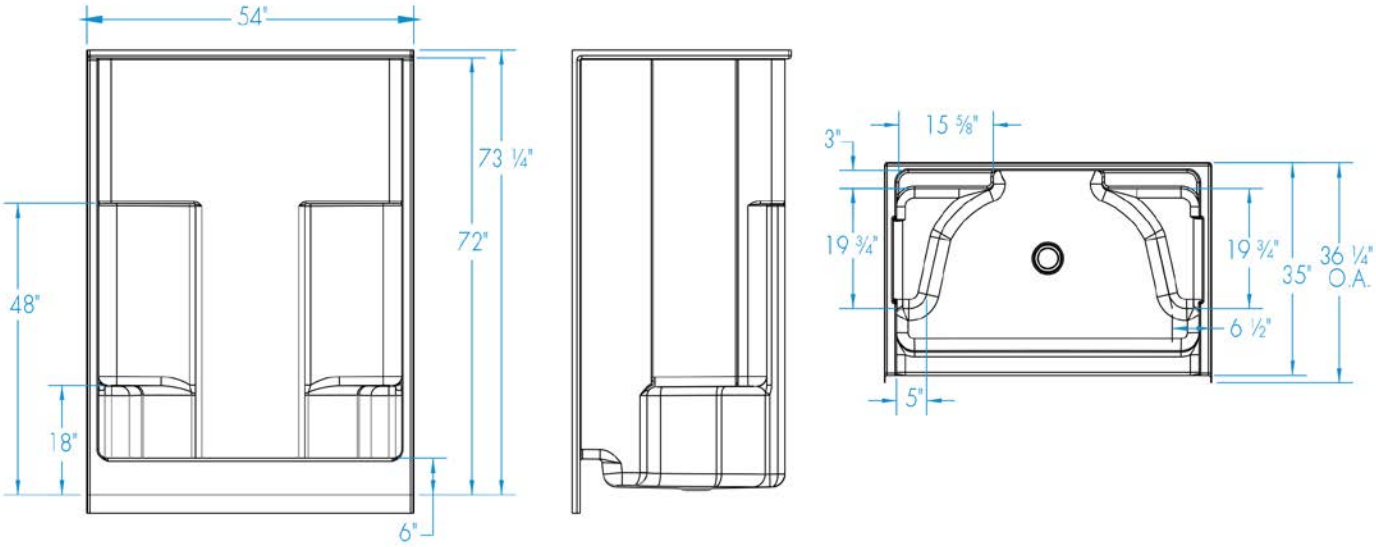
54"
73 ¼"
72"
48"
18"
6"
3"
15 ⅝"
19 ¾"
19 ¾"
35"
36 ¼"
O.A.
6 ½"
5"

1543SGM AFR



Material : AcrylX™

Features

- 1-Piece Shower stall
- Smooth wall finish is easy to clean
- Molded seats (2)
- Molded toiletry shelves
- This AFR unit accommodates the installation of drain above the floor
- Slip-resistant textured floor for safety
- Center drain
- AcrylX™ applied acrylic surface

1543SGM AFR - PRICING CATEGORY : EF

SKU	Color	Configuration	Dimensions & Weight	MSRP
1543SGM-AL	Almond	Two seats, center drain	54” x 35” x 75” / 127 lb 1372mm x 889mm x 1905mm / 57.6 kg	$ 1385
1543SGM-BI	Biscuit			$ 1385
1543SGM-BK	Black			$ 1705
1543SGM-BO	Bone			$ 1385
1543SGM-LN	Linen			$ 1385
1543SGM-ME	Mexican Sand			$ 1705
1543SGM-SD	Sandbar			$ 1705
1543SGM-ST	Sterling Silver			$ 1705
1543SGM-WH	White			$ 1350

OPTIONS

SKU	Description	MSRP
4200BRASDRSF	2” Brass Surefit Joint Shower Drain Brass drain material Snap in strainer-stainless steel No-caulk connection.	$ 48
30UPLT	Extra reinforcement for after market accessories installment. Order per wall Reinforcement is applied 30 inches and up **ONLY**,	$ 63
30UPRT	Extra reinforcement for after market accessories installment. Order per wall Reinforcement is applied 30 inches and up **ONLY**,	$ 63
30UPBK		$ 63

OPTIONS

SKU	Description	MSRP
FLATLT	Extra reinforcement for after market accessories installment. Order per wall Reinforcement is applied to flat surface areas.	$ 81
FLATRT	Extra reinforcement for after market accessories installment Order per wall Reinforcement is applied to flat surface areas.	$ 81
FLATBK	Extra reinforcement for after market accessories installment. Order per wall Reinforcement is applied to flat surface areas.	$ 81
SC	Ultra strong honeycomb reinforcement for demanding applications that require additional strength	$ 101
35RKBO	Finish repair kit - Case of 12 Available in White **(WH)**, or Bone **(BO)**,	$ 303
35RKWH		$ 303

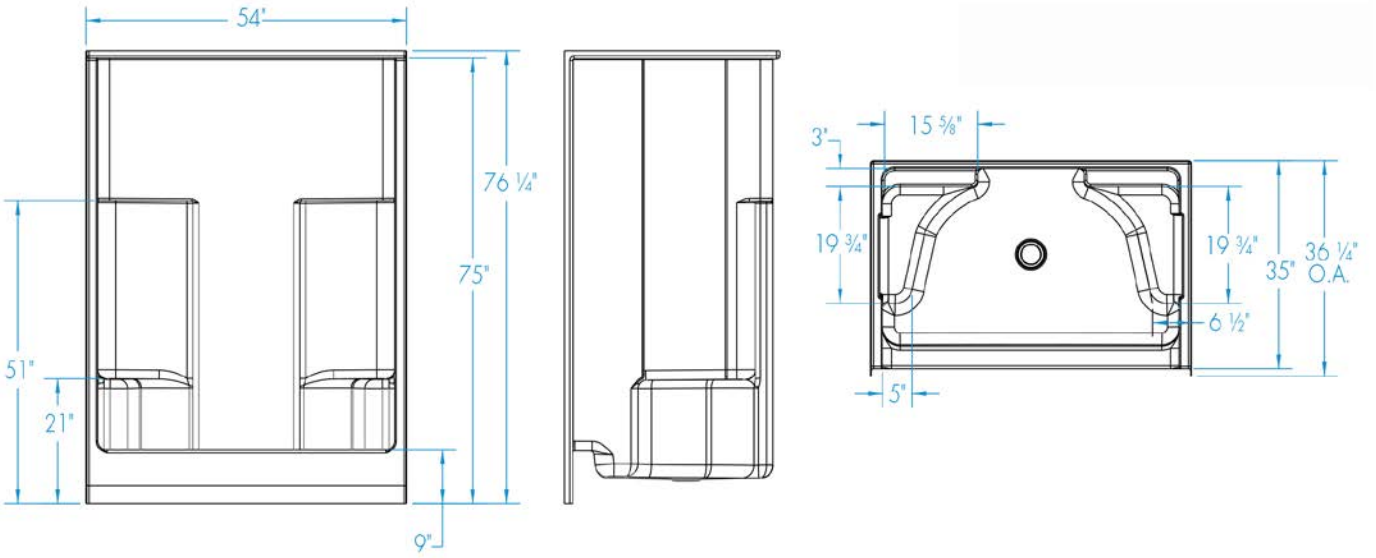
54"
76 ¼"
75"
51"
21"
9"
3"
15 ⅝"
19 ¾"
19 ¾"
35"
36 ¼"
O.A.
6 ½"
5"

160304PS



Material : AcrylX™

Features

- 4-piece shower
- Smooth wall is easy to clean
- Integral corner seat (left or right hand)
- Multiple integrally molded toiletry shelves
- Low, 3 Inch threshold
- Left or right hand drain
- Slip-resistant, textured bottom
- AcrylX™ applied acrylic surface

160304PS - PRICING CATEGORY : ER

SKU	Color	Configuration	Dimensions & Weight	MSRP
160304PSL-AL	Almond	Left-hand Drain	60” x 30” x 76” / 165 lb 1524mm x 762mm x 1930mm / 74.83 kg	$ 1675
160304PSL-BI	Biscuit			$ 1675
160304PSL-BK	Black			$ 1995
160304PSL-BO	Bone			$ 1675
160304PSL-LN	Linen			$ 1675
160304PSL-ME	Mexican Sand			$ 1995
160304PSL-SD	Sandbar			$ 1995
160304PSL-ST	Sterling Silver			$ 1995
160304PSL-WH	White			$ 1640
160304PSR-AL	Almond	Right-hand Drain		$ 1675
160304PSR-BI	Biscuit			$ 1675
160304PSR-BK	Black			$ 1995
160304PSR-BO	Bone			$ 1675
160304PSR-LN	Linen			$ 1675
160304PSR-ME	Mexican Sand			$ 1995
160304PSR-SD	Sandbar			$ 1995
160304PSR-ST	Sterling Silver			$ 1995
160304PSR-WH	White			$ 1640

OPTIONS

SKU	Description	MSRP
DDWO-PC	Designer drain waste & overflow kit Available finishes: White **(WH)**, Bone **(BO)**, Polished Chrome **(PC)**, Polished Brass**(PB)**, Brushed Nickel**(BN)**,	$ 288
DDWO-PB	Designer drain waste & overflow kit Available finishes: White **(WH)**, Bone **(BO)**, Polished Chrome **(PC)**, Polished Brass**(PB)**, Brushed Nickel**(BN)**,	$ 288
DDWO-BO	Designer drain waste & overflow kit Available finishes: White **(WH)**, Bone **(BO)**, Polished Chrome **(PC)**, Polished Brass**(PB)**, Brushed Nickel**(BN)**,	$ 288
DDWO-WH		$ 288
DDWO-BN		$ 288
30UPLT	Extra reinforcement for after market accessories installment. Order per wall Reinforcement is applied 30 inches and up **ONLY**,	$ 63
30UPRT		$ 63
30UPBK		$ 63
FLATLT	Extra reinforcement for after market accessories installment. Order per wall Reinforcement is applied to flat surface areas.	$ 81
FLATRT	Extra reinforcement for after market accessories installment Order per wall Reinforcement is applied to flat surface areas.	$ 81
FLATBK	Extra reinforcement for after market accessories installment. Order per wall Reinforcement is applied to flat surface areas.	$ 81
SC	Ultra strong honeycomb reinforcement for demanding applications that require additional strength	$ 101
35RKBO	Finish repair kit - Case of 12 Available in White **(WH)**, or Bone **(BO)**,	$ 303
35RKWH		$ 303

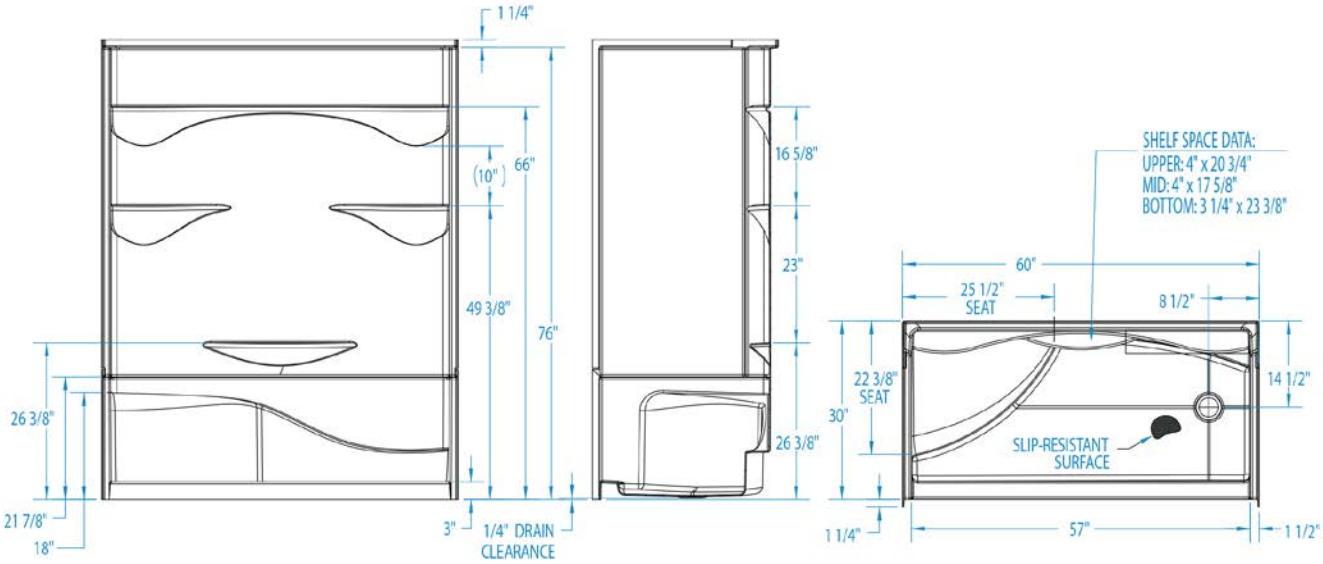
1 1/4"
66"
(10")
49 3/8"
76"
26 3/8"
21 7/8"
18"
3"
1/4" DRAIN
CLEARANCE
16 5/8"
23"
26 3/8"
SHELF SPACE DATA:
UPPER: 4" x 20 3/4"
MID: 4" x 17 5/8"
BOTTOM: 3 1/4" x 23 3/8"
60"
25 1/2"
SEAT
8 1/2"
22 3/8"
SEAT
30"
14 1/2"
SLIP-RESISTANT
SURFACE
1 1/4"
57"
1 1/2"

160304PST





Material : AcrylX™

Features

- 4-piece shower
- Subway tile wall is modern and easy to clean
- Integral corner seat (left or right hand)
- Multiple integrally molded toiletry shelves
- Low, 3 Inch threshold
- Left or right hand drain
- Slip-resistant, textured bottom
- AcrylX™ applied acrylic surface

160304PST - PRICING CATEGORY : ER

SKU	Color	Configuration	Dimensions & Weight	MSRP
160304PSTL-AL	Almond	Left-hand Drain	60” x 30” x 76” / 165 lb 1524mm x 762mm x 1930mm / 74.83 kg	$ 1723
160304PSTL-BI	Biscuit			$ 1723
160304PSTL-BK	Black			$ 2043
160304PSTL-BO	Bone			$ 1723
160304PSTL-LN	Linen			$ 1723
160304PSTL-ME	Mexican Sand			$ 2043
160304PSTL-SD	Sandbar			$ 2043
160304PSTL-ST	Sterling Silver			$ 2043
160304PSTL-WH	White			$ 1688
160304PSTR-AL	Almond	Right-hand Drain		$ 1723
160304PSTR-BI	Biscuit			$ 1723
160304PSTR-BK	Black			$ 2043
160304PSTR-BO	Bone			$ 1723
160304PSTR-LN	Linen			$ 1723
160304PSTR-ME	Mexican Sand			$ 2043
160304PSTR-SD	Sandbar			$ 2043
160304PSTR-ST	Sterling Silver			$ 2043
160304PSTR-WH	White			$ 1688

OPTIONS

SKU	Description	MSRP
DDWO-PC	Designer drain waste & overflow kit Available finishes: White **(WH)**, Bone **(BO)**, Polished Chrome **(PC)**, Polished Brass**(PB)**, Brushed Nickel**(BN)**,	$ 288
DDWO-PB	Designer drain waste & overflow kit Available finishes: White **(WH)**, Bone **(BO)**, Polished Chrome **(PC)**, Polished Brass**(PB)**, Brushed Nickel**(BN)**,	$ 288
DDWO-BO	Designer drain waste & overflow kit Available finishes: White **(WH)**, Bone **(BO)**, Polished Chrome **(PC)**, Polished Brass**(PB)**, Brushed Nickel**(BN)**,	$ 288
DDWO-WH		$ 288
DDWO-BN		$ 288
30UPLT	Extra reinforcement for after market accessories installment. Order per wall Reinforcement is applied 30 inches and up **ONLY**,	$ 63
30UPRT		$ 63
30UPBK		$ 63
FLATLT	Extra reinforcement for after market accessories installment. Order per wall Reinforcement is applied to flat surface areas.	$ 81
FLATRT	Extra reinforcement for after market accessories installment Order per wall Reinforcement is applied to flat surface areas.	$ 81
FLATBK	Extra reinforcement for after market accessories installment. Order per wall Reinforcement is applied to flat surface areas.	$ 81
SC	Ultra strong honeycomb reinforcement for demanding applications that require additional strength	$ 101
35RKBO	Finish repair kit - Case of 12 Available in White **(WH)**, or Bone **(BO)**,	$ 303
35RKWH		$ 303

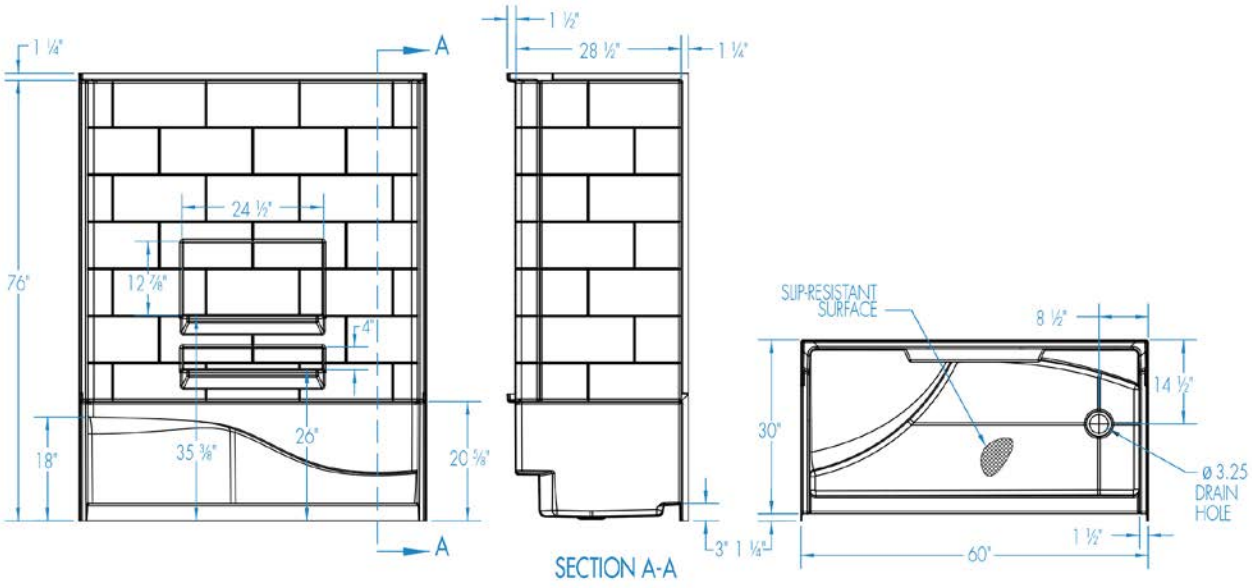
1 ¼"
A
1 ½"
28 ½"
1 ¼"
24 ½"
76"
12 7/8"
4"
18"
35 3/8"
26"
20 5/8"
A
3"
1 ¼"
SECTION A-A
SLIP-RESISTANT SURFACE
8 ½"
14 ½"
30"
Ø 3.25 DRAIN HOLE
1 ½"
60"

16030STTL/R





Material : AcrylX™

Features

- 1-Piece Shower stall
- Simulated subway tile wall design is easy to clean with no messy grout line
- Low 4 Inch threshold
- Enclosure opening 57 Inches
- Slip-resistant textured floor for safety
- Left or hand drain
- Ideal for tub replacement

16030STTL/R - PRICING CATEGORY : EK

SKU	Color	Configuration	Dimensions & Weight	MSRP
16030STTL-BI	Biscuit	Left-hand Drain	60” x 30” x 73” / 143 lb 1524mm x 762mm x 1854mm / 64.85 kg	$ 1276
16030STTL-BO	Bone			$ 1276
16030STTL-WH	White			$ 1241
16030STTR-BI	Biscuit	Right-hand Drain		$ 1276
16030STTR-BO	Bone			$ 1276
16030STTR-WH	White			$ 1241

OPTIONS

SKU	Description	MSRP
4200BRASDRSF	2” Brass Surefit Joint Shower Drain Brass drain material Snap in strainer-stainless steel No-caulk connection.	$ 48
30UPLT	Extra reinforcement for after market accessories installment. Order per wall Reinforcement is applied 30 inches and up **ONLY**,	$ 63
30UPRT	Extra reinforcement for after market accessories installment. Order per wall Reinforcement is applied 30 inches and up **ONLY**,	$ 63
30UPBK		$ 63
FLATLT	Extra reinforcement for after market accessories installment. Order per wall Reinforcement is applied to flat surface areas.	$ 81
FLATRT	Extra reinforcement for after market accessories installment Order per wall Reinforcement is applied to flat surface areas.	$ 81

OPTIONS

SKU	Description	MSRP
FLATBK	Extra reinforcement for after market accessories installment. Order per wall Reinforcement is applied to flat surface areas.	$ 81
SC	Ultra strong honeycomb reinforcement for demanding applications that require additional strength	$ 101
35RKBO	Finish repair kit - Case of 12 Available in White **(WH)**, or Bone **(BO)**,	$ 303
35RKWH		$ 303

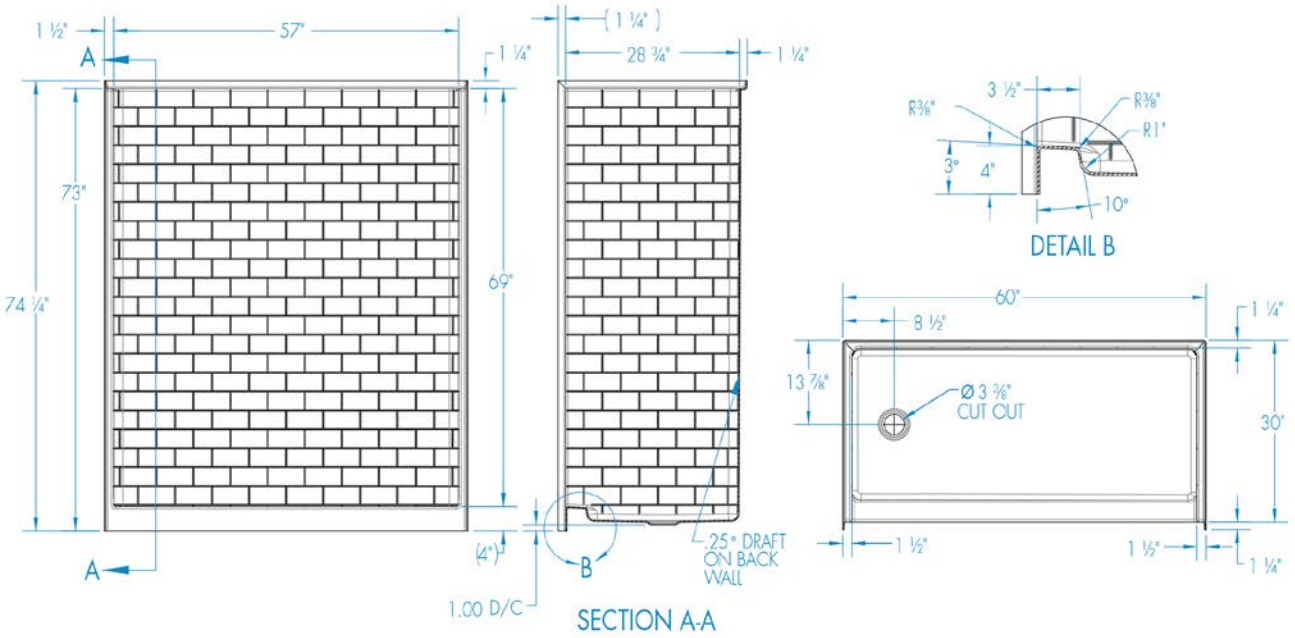
1 ½"
57"
A
1 ¼"
(1 ¼")
28 ¾"
1 ¼"
73"
74 ¼"
69"
(4")
B
.25° DRAFT ON BACK WALL
1.00 D/C
SECTION A-A
3 ½"
R3⅛"
R3⅛"
R1"
3"
4"
10"
DETAIL B
60"
8 ½"
1 ¼"
13 ⅞"
Ø 3 ⅜" CUT OUT
30"
1 ½"
1 ½"
1 ¼"

16030STTML/R AFR





Material : AcrylX™

Features

- 1-Piece Shower stall
- Simulated subway tile wall design is easy to clean with no messy grout line
- Low threshold -4 Inch
- Enclosure opening 57 Inches
- Slip-resistant textured floor for safety
- This AFR unit accommodates the installation of drain above the floor
- Left or hand drain
- Ideal for tub replacement

16030STTML/R AFR - PRICING CATEGORY : EK

SKU	Color	Configuration	Dimensions & Weight	MSRP
16030STTML-AL	Almond	Left-hand Drain	60” x 30” x 75” / 145 lb 1524mm x 762mm x 1905mm / 65.76 kg	$ 1313
16030STTML-BI	Biscuit			$ 1313
16030STTML-BO	Bone			$ 1313
16030STTML-ST	Sterling Silver			$ 1633
16030STTML-WH	White			$ 1278
16030STTMR-AL	Almond	Right-hand Drain		$ 1313
16030STTMR-BI	Biscuit			$ 1313
16030STTMR-BO	Bone			$ 1313
16030STTMR-ST	Sterling Silver			$ 1633
16030STTMR-WH	White			$ 1278

OPTIONS

SKU	Description	MSRP
4200BRASDRSF	2” Brass Surefit Joint Shower Drain Brass drain material Snap in strainer-stainless steel No-caulk connection.	$ 48
30UPLT	Extra reinforcement for after market accessories installment. Order per wall Reinforcement is applied 30 inches and up **ONLY**,	$ 63
30UPRT	Extra reinforcement for after market accessories installment. Order per wall Reinforcement is applied 30 inches and up **ONLY**,	$ 63

OPTIONS

SKU	Description	MSRP
30UPBK	Extra reinforcement for after market accessories installment. Order per wall Reinforcement is applied 30 inches and up **ONLY**,	$ 63
FLATLT	Extra reinforcement for after market accessories installment. Order per wall Reinforcement is applied to flat surface areas.	$ 81
FLATRT	Extra reinforcement for after market accessories installment Order per wall Reinforcement is applied to flat surface areas.	$ 81
FLATBK	Extra reinforcement for after market accessories installment. Order per wall Reinforcement is applied to flat surface areas.	$ 81
SC	Ultra strong honeycomb reinforcement for demanding applications that require additional strength	$ 101
35RKBO	Finish repair kit - Case of 12 Available in White **(WH)**, or Bone **(BO)**,	$ 303
35RKWH		$ 303

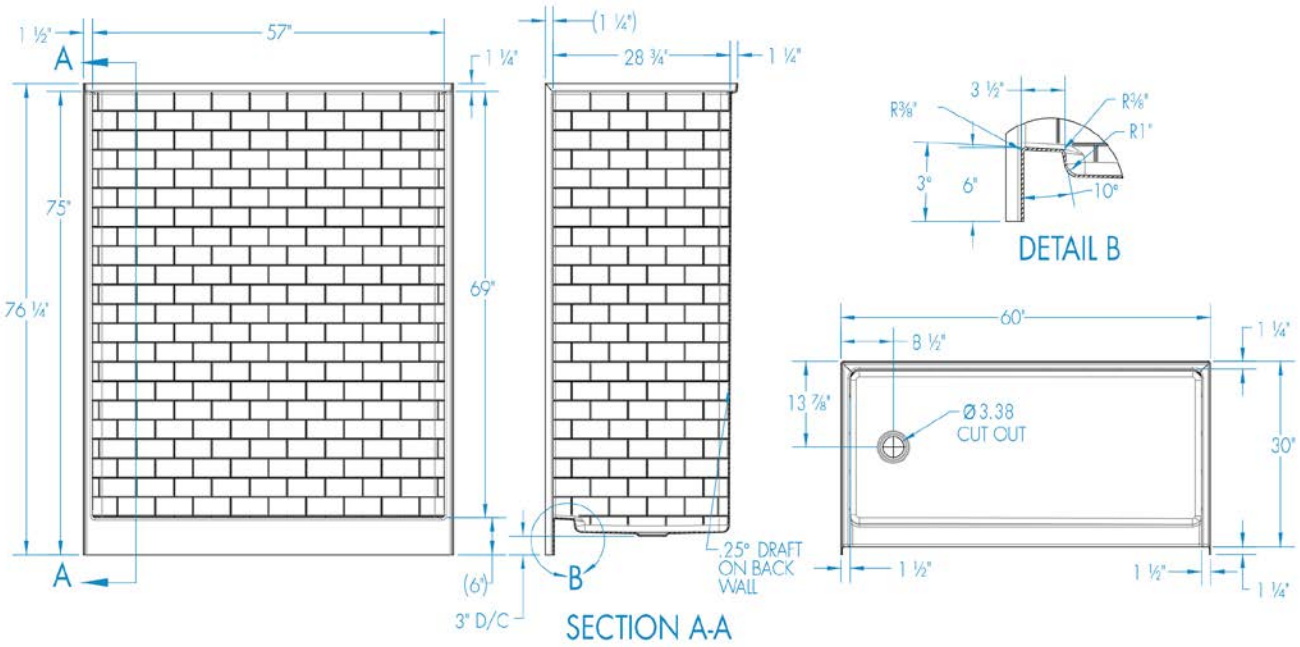
1 ½"
57"
A
(1 ¼")
1 ¼"
28 ¾"
1 ¼"
75"
76 ¼"
69"
A
(6")
3" D/C
B
.25° DRAFT ON BACK WALL
SECTION A-A
3 ½"
R⅜"
R⅜"
R1"
3"
6"
10°
DETAIL B
60"
8 ½"
1 ¼"
13 ⅞"
Ø3.38
CUT OUT
30"
1 ½"
1 ½"
1 ¼"

16033P



Material : AcrylX™

Features

- 3-piece shower
- Smooth wall is easy to clean
- Integral seats
- Molded toiletry shelf
- Center drain
- AcrylX™ applied acrylic surface

16033P - PRICING CATEGORY : ER

SKU	Color	Configuration	Dimensions & Weight	MSRP
16033P-AL	Almond	Two seats, center drain	60” x 34” x 72” / 128 lb 1524mm x 864mm x 1829mm / 58.05 kg	$ 1369
16033P-BI	Biscuit			$ 1369
16033P-BK	Black			$ 1689
16033P-BO	Bone			$ 1369
16033P-LN	Linen			$ 1369
16033P-ME	Mexican Sand			$ 1689
16033P-SD	Sandbar			$ 1689
16033P-ST	Sterling Silver			$ 1689
16033P-WH	White			$ 1334

OPTIONS

SKU	Description	MSRP
DDWO-PC	Designer drain waste & overflow kit Available finishes: White **(WH)**, Bone **(BO)**, Polished Chrome **(PC)**, Polished Brass**(PB)**, Brushed Nickel**(BN)**,	$ 288
DDWO-PB	Designer drain waste & overflow kit Available finishes: White **(WH)**, Bone **(BO)**, Polished Chrome **(PC)**, Polished Brass**(PB)**, Brushed Nickel**(BN)**,	$ 288
DDWO-BO	Designer drain waste & overflow kit Available finishes: White **(WH)**, Bone **(BO)**, Polished Chrome **(PC)**, Polished Brass**(PB)**, Brushed Nickel**(BN)**,	$ 288
DDWO-WH		$ 288
DDWO-BN		$ 288
30UPLT	Extra reinforcement for after market accessories installment. Order per wall Reinforcement is applied 30 inches and up **ONLY**,	$ 63

OPTIONS

SKU	Description	MSRP
30UPRT	Extra reinforcement for after market accessories installment. Order per wall Reinforcement is applied 30 inches and up **ONLY**,	$ 63
30UPBK		$ 63
FLATLT	Extra reinforcement for after market accessories installment. Order per wall Reinforcement is applied to flat surface areas.	$ 81
FLATRT	Extra reinforcement for after market accessories installment Order per wall Reinforcement is applied to flat surface areas.	$ 81
FLATBK	Extra reinforcement for after market accessories installment. Order per wall Reinforcement is applied to flat surface areas.	$ 81
SC	Ultra strong honeycomb reinforcement for demanding applications that require additional strength	$ 101
35RKBO	Finish repair kit - Case of 12 Available in White **(WH)**, or Bone **(BO)**,	$ 303
35RKWH		$ 303

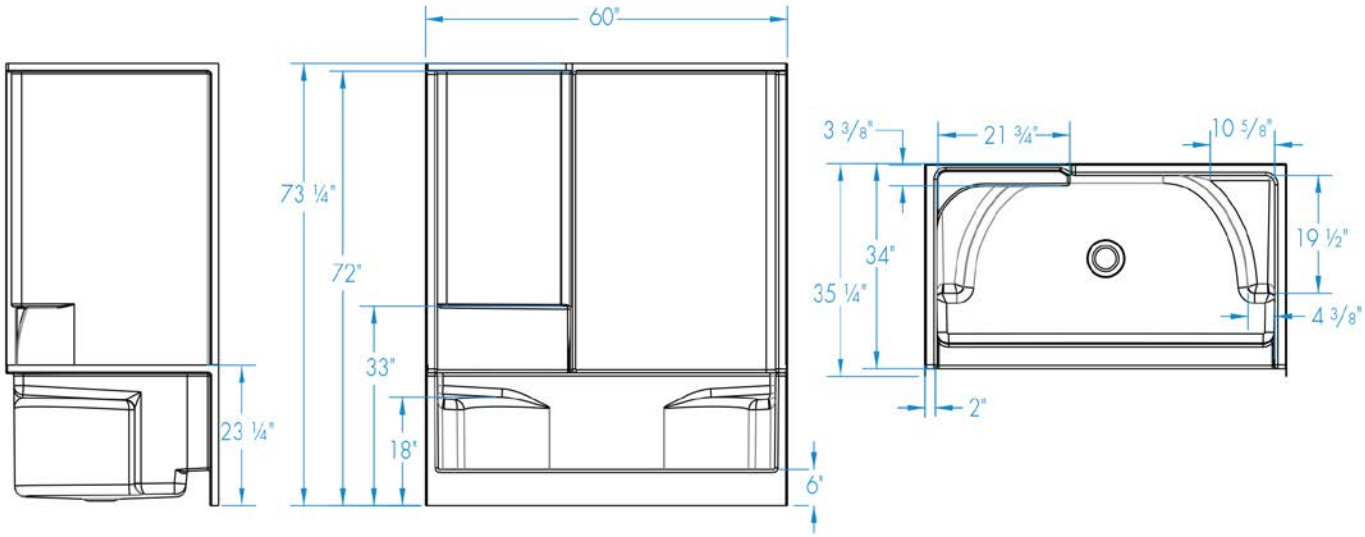
60"
73 ¼"
72"
33"
18"
23 ¼"
6"
3 3/8"
21 ¾"
10 5/8"
34"
35 ¼"
19 ½"
4 3/8"
2"

160344PS



Material : AcrylX™

Features

- 4-piece shower
- Smooth wall is easy to clean
- Integral seat (Seat location will be opposite of drain)
- Molded toiletry shelves
- Slip-resistant textured floor for safety
- Left or right hand drain
- AcrylX™ applied acrylic surface

160344PS - PRICING CATEGORY : ER

SKU	Color	Configuration	Dimensions & Weight	MSRP
160344PSL-AL	Almond	Right seat, left drain	60” x 34” x 76” / 184 lb 1524mm x 864mm x 1930mm / 83.45 kg	$ 1715
160344PSL-BI	Biscuit			$ 1715
160344PSL-BK	Black			$ 2035
160344PSL-BO	Bone			$ 1715
160344PSL-LN	Linen			$ 1715
160344PSL-ME	Mexican Sand			$ 2035
160344PSL-SD	Sandbar			$ 2035
160344PSL-ST	Sterling Silver			$ 2035
160344PSL-WH	White			$ 1680
160344PSR-AL	Almond	Left seat, right drain		$ 1715
160344PSR-BI	Biscuit			$ 1715
160344PSR-BK	Black			$ 2035
160344PSR-LN	Linen			$ 1715
160344PSR-ME	Mexican Sand			$ 2035
160344PSR-SD	Sandbar			$ 2035
160344PSR-ST	Sterling Silver			$ 2035
160344PSR-WH	White			$ 1680

OPTIONS

SKU	Description	MSRP
DDWO-PC	Designer drain waste & overflow kit Available finishes: White **(WH)**, Bone **(BO)**, Polished Chrome **(PC)**, Polished Brass**(PB)**, Brushed Nickel**(BN)**,	$ 288
DDWO-PB	Designer drain waste & overflow kit Available finishes: White **(WH)**, Bone **(BO)**, Polished Chrome **(PC)**, Polished Brass**(PB)**, Brushed Nickel**(BN)**,	$ 288
DDWO-BO	Designer drain waste & overflow kit Available finishes: White **(WH)**, Bone **(BO)**, Polished Chrome **(PC)**, Polished Brass**(PB)**, Brushed Nickel**(BN)**,	$ 288
DDWO-WH		$ 288
DDWO-BN		$ 288
30UPLT	Extra reinforcement for after market accessories installment. Order per wall Reinforcement is applied 30 inches and up **ONLY**,	$ 63
30UPRT		$ 63
30UPBK		$ 63
FLATLT	Extra reinforcement for after market accessories installment. Order per wall Reinforcement is applied to flat surface areas.	$ 81
FLATRT	Extra reinforcement for after market accessories installment Order per wall Reinforcement is applied to flat surface areas.	$ 81
FLATBK	Extra reinforcement for after market accessories installment. Order per wall Reinforcement is applied to flat surface areas.	$ 81
SC	Ultra strong honeycomb reinforcement for demanding applications that require additional strength	$ 101
35RKBO	Finish repair kit - Case of 12 Available in White **(WH)**, or Bone **(BO)**,	$ 303
35RKWH		$ 303

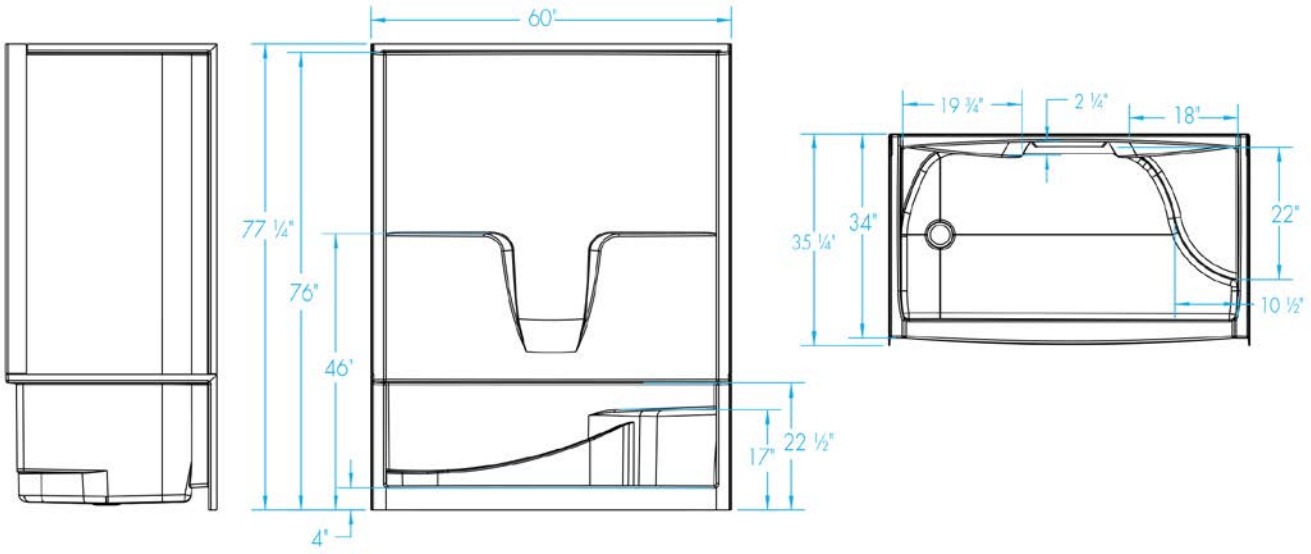
60"
77 ¼"
76"
46"
4"
17"
22 ½"
19 ¾"
2 ¼"
18"
35 ¼"
34"
22"
10 ½"

16034STTS





Material : AcrylX™

Features

- 1-Piece Shower stall
- Simulated subway tile wall design is easy to clean with no messy grout line
- Molded seat (left or right hand)
- Molded toiletry shelf
- Low 3 Inch threshold
- Center drain
- Slip-resistant textured floor for safety
- AcrylX™ applied acrylic surface

16034STTS - PRICING CATEGORY : EK

SKU	Color	Configuration	Dimensions & Weight	MSRP
16034STTSL-AL	Almond	Left seat, center drain	60” x 34” x 80” / 142 lb 1524mm x 864mm x 2032mm / 64.4 kg	$ 1276
16034STTSL-BI	Biscuit			$ 1276
16034STTSL-BK	Black			$ 1596
16034STTSL-BO	Bone			$ 1276
16034STTSL-LN	Linen			$ 1276
16034STTSL-ME	Mexican Sand			$ 1596
16034STTSL-SD	Sandbar			$ 1596
16034STTSL-ST	Sterling Silver			$ 1596
16034STTSL-WH	White			$ 1241
16034STTSR-AL	Almond	Right seat, center drain		$ 1276
16034STTSR-BI	Biscuit			$ 1276
16034STTSR-BK	Black			$ 1596
16034STTSR-BO	Bone			$ 1276
16034STTSR-LN	Linen			$ 1276
16034STTSR-ME	Mexican Sand			$ 1596
16034STTSR-SD	Sandbar			$ 1596
16034STTSR-ST	Sterling Silver			$ 1596
16034STTSR-WH	White			$ 1241

OPTIONS

SKU	Description	MSRP
4200BRASDRSF	2” Brass Surefit Joint Shower Drain Brass drain material Snap in strainer-stainless steel No-caulk connection.	$ 48
30UPLT	Extra reinforcement for after market accessories installment. Order per wall Reinforcement is applied 30 inches and up **ONLY**,	$ 63
30UPRT	Extra reinforcement for after market accessories installment. Order per wall Reinforcement is applied 30 inches and up **ONLY**,	$ 63
30UPBK		$ 63
FLATLT	Extra reinforcement for after market accessories installment. Order per wall Reinforcement is applied to flat surface areas.	$ 81
FLATRT	Extra reinforcement for after market accessories installment Order per wall Reinforcement is applied to flat surface areas.	$ 81
FLATBK	Extra reinforcement for after market accessories installment. Order per wall Reinforcement is applied to flat surface areas.	$ 81
SC	Ultra strong honeycomb reinforcement for demanding applications that require additional strength	$ 101
35RKBO	Finish repair kit - Case of 12 Available in White **(WH)**, or Bone **(BO)**,	$ 303
35RKWH		$ 303

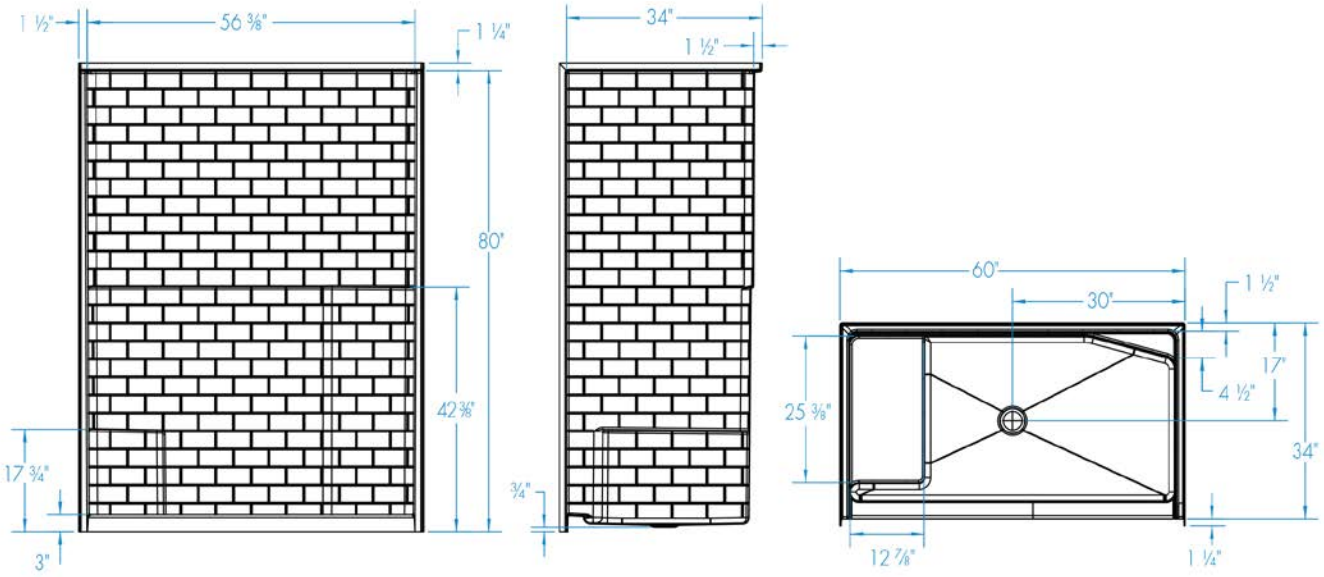
1 ½"
56 ⅜"
1 ¼"
80"
42 ⅜"
17 ¾"
3"
34"
1 ½"
¾"
60"
30"
1 ½"
17"
4 ½"
25 ⅜"
34"
12 ⅞"
1 ¼"

16034STTSM AFR



Material : AcrylX™

Features

- 1-Piece Shower stall
- Simulated subway tile wall design is easy to clean with no messy grout line
- This AFR unit accommodates the installation of drain above the floor
- Molded seat (left or right hand)
- Molded toiletry shelf
- Center drain
- Slip-resistant textured floor for safety
- AcrylX™ applied acrylic surface

16034STTSM AFR - PRICING CATEGORY : EK

SKU	Color	Configuration	Dimensions & Weight	MSRP
16034STTSML-AL	Almond	Left seat, center drain	60” x 34” x 83” / 142 lb 1524mm x 864mm x 2108mm / 64.4 kg	$ 1313
16034STTSML-BI	Biscuit			$ 1313
16034STTSML-BK	Black			$ 1633
16034STTSML-BO	Bone			$ 1313
16034STTSML-LN	Linen			$ 1313
16034STTSML-ME	Mexican Sand			$ 1633
16034STTSML-SD	Sandbar			$ 1633
16034STTSML-ST	Sterling Silver			$ 1633
16034STTSML-WH	White			$ 1278
16034STTSMR-AL	Almond	Right seat, center drain		$ 1313
16034STTSMR-BI	Biscuit			$ 1313
16034STTSMR-BK	Black			$ 1633
16034STTSMR-BO	Bone			$ 1313
16034STTSMR-LN	Linen			$ 1313
16034STTSMR-ME	Mexican Sand			$ 1633
16034STTSMR-SD	Sandbar			$ 1633
16034STTSMR-ST	Sterling Silver			$ 1633
16034STTSMR-WH	White			$ 1278

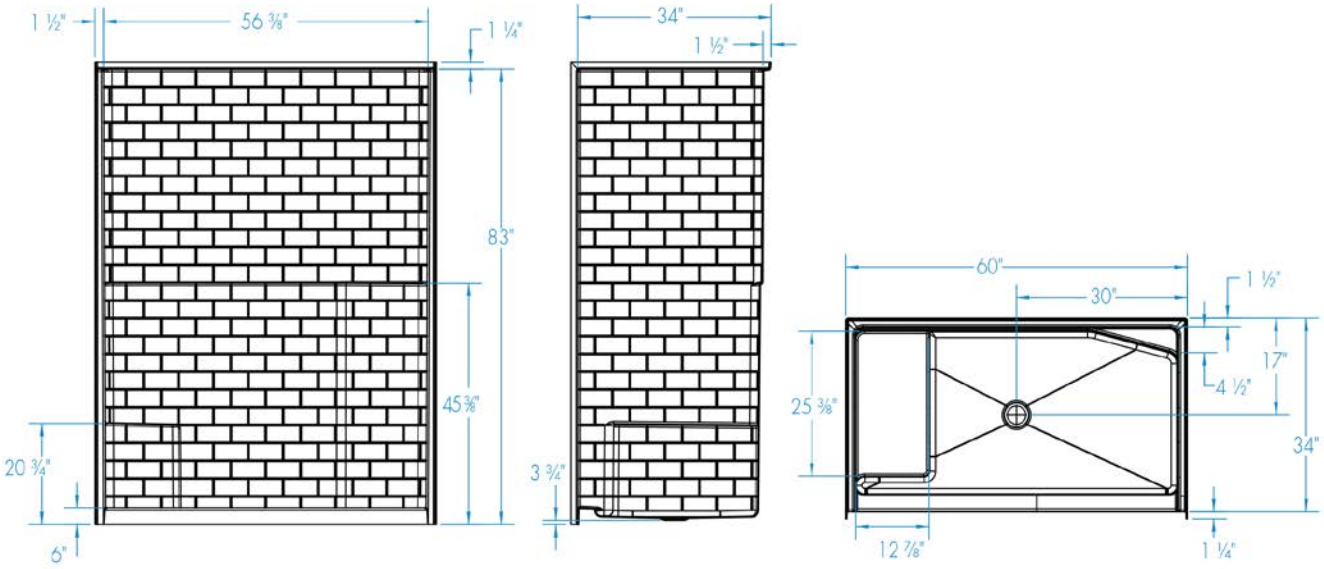
1 ½"
56 ⅜"
1 ¼"
83"
45⅜"
20 ¾"
6"
34"
1 ½"
3 ¾"
60"
30"
1 ½"
17"
4 ½"
25 ⅜"
34"
12 ⅞"
1 ¼"

1603COS



Material : AcrylX™

Features

- 1-Piece Shower stall
- Textured tile finish is easy to maintain
- Molded seat (Left or right hand)
- Molded toiletry shelves
- Slip-resistant textured floor for safety
- Center drain
- AcrylX™ applied acrylic surface

1603COS - PRICING CATEGORY : EF

SKU	Color	Configuration	Dimensions & Weight	MSRP
1603COSL-AL	Almond	Left seat, center drain	60” x 35” x 72” / 133 lb 1524mm x 889mm x 1829mm / 60.32 kg	$ 1411
1603COSL-BI	Biscuit			$ 1411
1603COSL-BK	Black			$ 1731
1603COSL-BO	Bone			$ 1411
1603COSL-LN	Linen			$ 1411
1603COSL-ME	Mexican Sand			$ 1731
1603COSL-SD	Sandbar			$ 1731
1603COSL-ST	Sterling Silver			$ 1731
1603COSL-WH	White			$ 1376
1603COSR-AL	Almond	Right seat, center drain		$ 1411
1603COSR-BI	Biscuit			$ 1411
1603COSR-BK	Black			$ 1731
1603COSR-BO	Bone			$ 1411
1603COSR-LN	Linen			$ 1411
1603COSR-ME	Mexican Sand			$ 1731
1603COSR-SD	Sandbar			$ 1731
1603COSR-ST	Sterling Silver			$ 1731
1603COSR-WH	White			$ 1376

OPTIONS

SKU	Description	MSRP
4200BRASDRSF	2” Brass Surefit Joint Shower Drain Brass drain material Snap in strainer-stainless steel No-caulk connection.	$ 48
30UPLT	Extra reinforcement for after market accessories installment. Order per wall Reinforcement is applied 30 inches and up **ONLY**,	$ 63
30UPRT	Extra reinforcement for after market accessories installment. Order per wall Reinforcement is applied 30 inches and up **ONLY**,	$ 63
30UPBK		$ 63
FLATLT	Extra reinforcement for after market accessories installment. Order per wall Reinforcement is applied to flat surface areas.	$ 81
FLATRT	Extra reinforcement for after market accessories installment Order per wall Reinforcement is applied to flat surface areas.	$ 81
FLATBK	Extra reinforcement for after market accessories installment. Order per wall Reinforcement is applied to flat surface areas.	$ 81
SC	Ultra strong honeycomb reinforcement for demanding applications that require additional strength	$ 101
35RKBO	Finish repair kit - Case of 12 Available in White **(WH)**, or Bone **(BO)**,	$ 303
35RKWH		$ 303

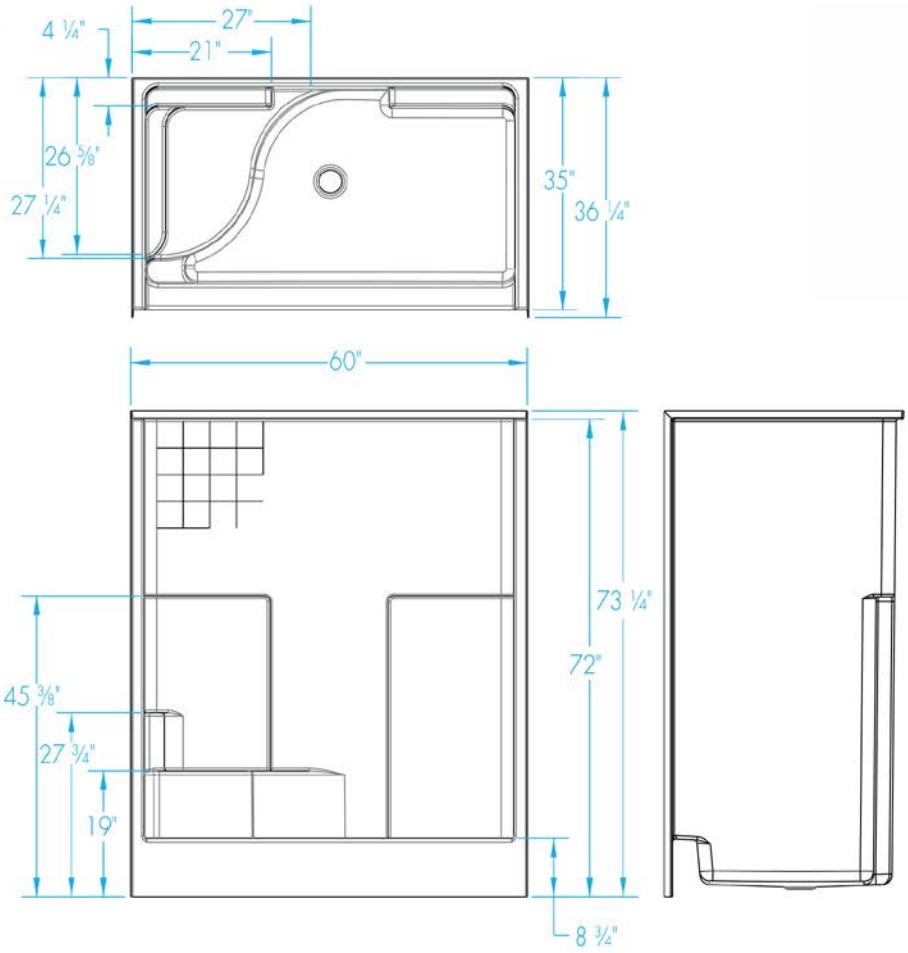
4 1/4"
27"
21"
26 5/8"
27 1/4"
35"
36 1/4"
60"
73 1/4"
72"
45 3/8"
27 3/4"
19"
8 3/4"

1603CST





Material : AcrylX™

Features

- 1-Piece Shower stall
- Textured tile finish is easy to maintain
- Molded seat (Left or right hand)
- Molded toiletry shelves
- Slip-resistant textured floor for safety
- Center drain
- AcrylX™ applied acrylic surface

1603CST - PRICING CATEGORY : EF

SKU	Color	Configuration	Dimensions & Weight	MSRP
1603CSTL-AL	Almond	Left seat, center drain	60” x 35” x 76” / 138 lb 1524mm x 889mm x 1930mm / 62.59 kg	$ 1508
1603CSTL-BI	Biscuit			$ 1508
1603CSTL-BK	Black			$ 1828
1603CSTL-BO	Bone			$ 1508
1603CSTL-LN	Linen			$ 1508
1603CSTL-ME	Mexican Sand			$ 1828
1603CSTL-SD	Sandbar			$ 1828
1603CSTL-ST	Sterling Silver			$ 1828
1603CSTL-WH	White			$ 1473
1603CSTR-AL	Almond	Right seat, center drain		$ 1508
1603CSTR-BI	Biscuit			$ 1508
1603CSTR-BK	Black			$ 1828
1603CSTR-BO	Bone			$ 1508
1603CSTR-LN	Linen			$ 1508
1603CSTR-ME	Mexican Sand			$ 1828
1603CSTR-SD	Sandbar			$ 1828
1603CSTR-ST	Sterling Silver			$ 1828
1603CSTR-WH	White			$ 1473

OPTIONS

SKU	Description	MSRP
4200BRASDRSF	2” Brass Surefit Joint Shower Drain Brass drain material Snap in strainer-stainless steel No-caulk connection.	$ 48
30UPLT	Extra reinforcement for after market accessories installment. Order per wall Reinforcement is applied 30 inches and up **ONLY**,	$ 63
30UPRT	Extra reinforcement for after market accessories installment. Order per wall Reinforcement is applied 30 inches and up **ONLY**,	$ 63
30UPBK		$ 63
FLATLT	Extra reinforcement for after market accessories installment. Order per wall Reinforcement is applied to flat surface areas.	$ 81
FLATRT	Extra reinforcement for after market accessories installment Order per wall Reinforcement is applied to flat surface areas.	$ 81
FLATBK	Extra reinforcement for after market accessories installment. Order per wall Reinforcement is applied to flat surface areas.	$ 81
SC	Ultra strong honeycomb reinforcement for demanding applications that require additional strength	$ 101
35RKBO	Finish repair kit - Case of 12 Available in White **(WH)**, or Bone **(BO)**,	$ 303
35RKWH		$ 303

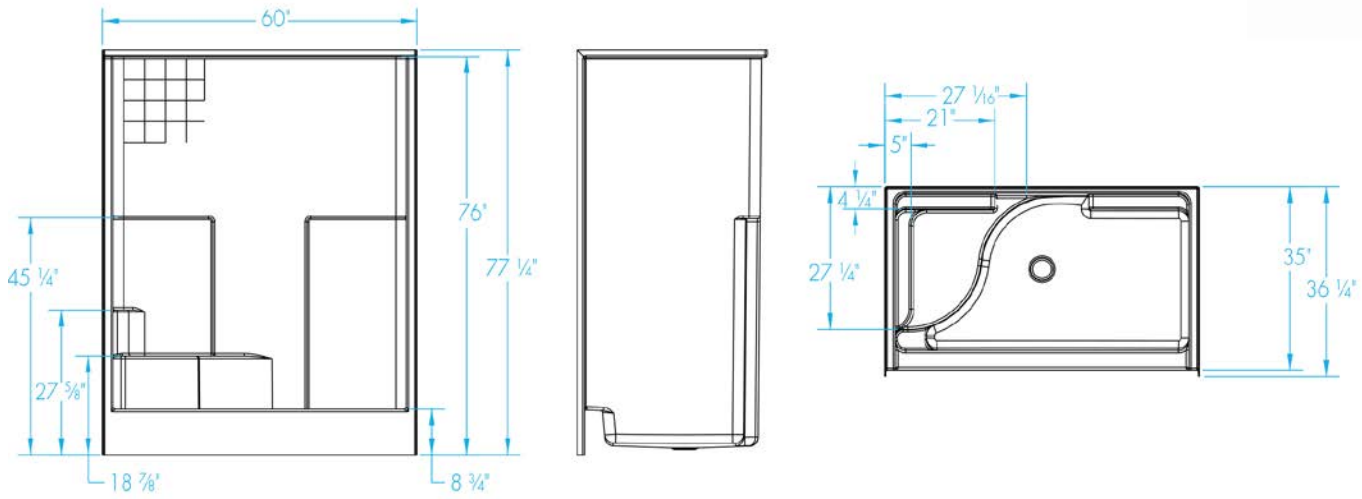
60"
76"
77 ¼"
45 ¼"
27 5⁄8"
18 7⁄8"
8 ¾"
27 1⁄16"
21"
5"
4 ¼"
27 ¼"
35"
36 ¼"

1603CTGN



Material : AcrylX™

Features

- 1-Piece Shower stall
- Textured tile finish is easy to maintain
- Molded seats (2)
- Molded toiletry shelves
- Slip-resistant textured floor for safety
- Center drain
- AcrylX™ applied acrylic surface

1603CTGN - PRICING CATEGORY : EF

SKU	Color	Configuration	Dimensions & Weight	MSRP
1603CTGN-AL	Almond	Two seats, center drain	60” x 35” x 72” / 123 lb 1524mm x 889mm x 1829mm / 55.78 kg	$ 1348
1603CTGN-BI	Biscuit			$ 1348
1603CTGN-BK	Black			$ 1668
1603CTGN-BO	Bone			$ 1348
1603CTGN-LN	Linen			$ 1348
1603CTGN-ME	Mexican Sand			$ 1668
1603CTGN-SD	Sandbar			$ 1668
1603CTGN-ST	Sterling Silver			$ 1668
1603CTGN-WH	White			$ 1313

OPTIONS

SKU	Description	MSRP
4200BRASDRSF	2” Brass Surefit Joint Shower Drain Brass drain material Snap in strainer-stainless steel No-caulk connection.	$ 48
30UPLT	Extra reinforcement for after market accessories installment. Order per wall Reinforcement is applied 30 inches and up **ONLY**,	$ 63
30UPRT	Extra reinforcement for after market accessories installment. Order per wall Reinforcement is applied 30 inches and up **ONLY**,	$ 63
30UPBK		$ 63

OPTIONS

SKU	Description	MSRP
FLATLT	Extra reinforcement for after market accessories installment. Order per wall Reinforcement is applied to flat surface areas.	$ 81
FLATRT	Extra reinforcement for after market accessories installment Order per wall Reinforcement is applied to flat surface areas.	$ 81
FLATBK	Extra reinforcement for after market accessories installment. Order per wall Reinforcement is applied to flat surface areas.	$ 81
SC	Ultra strong honeycomb reinforcement for demanding applications that require additional strength	$ 101
35RKBO	Finish repair kit - Case of 12 Available in White **(WH)**, or Bone **(BO)**,	$ 303
35RKWH		$ 303

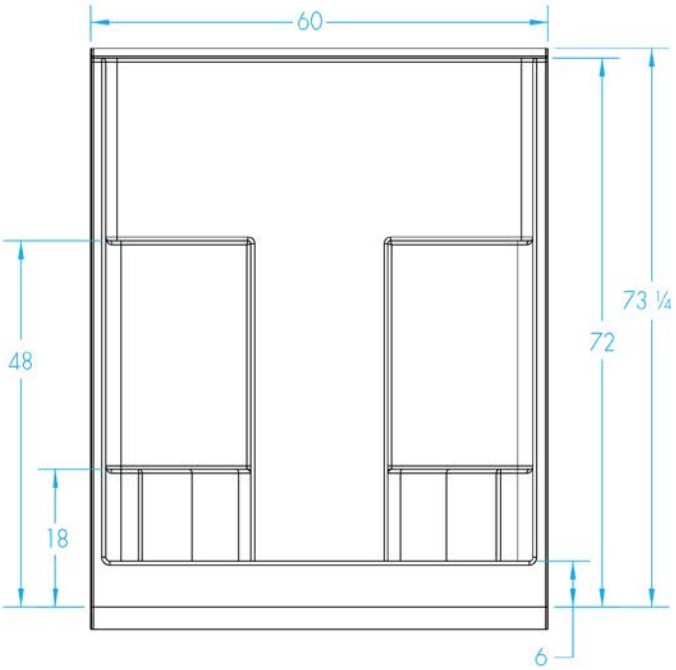
60
73 ¼
72
48
18
6

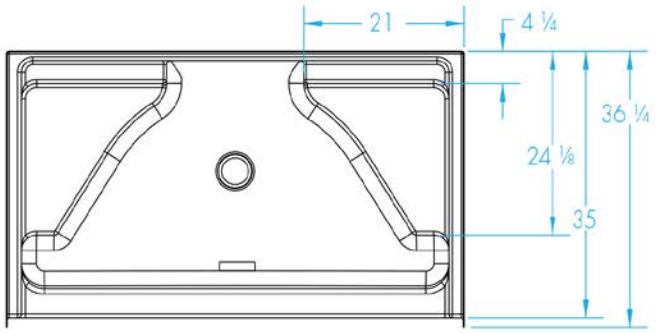
21
4 ¼
36 ¼
24 ⅛
35

1603CTGNM AFR





Material : AcrylX™

Features

- 1-Piece Shower stall
- Textured tile finish is easy to maintain
- Molded seats (2)
- Molded toiletry shelves
- This AFR unit accommodates the installation of drain above the floor
- Slip-resistant textured floor for safety
- Center drain
- AcrylX™ applied acrylic surface

1603CTGNM AFR - PRICING CATEGORY : EF

SKU	Color	Configuration	Dimensions & Weight	MSRP
1603CTGNM-AL	Almond	Two seats, center drain	60” x 35” x 75” / 132 lb 1524mm x 889mm x 1905mm / 59.86 kg	$ 1458
1603CTGNM-BI	Biscuit			$ 1458
1603CTGNM-BK	Black			$ 1778
1603CTGNM-BO	Bone			$ 1458
1603CTGNM-LN	Linen			$ 1458
1603CTGNM-ME	Mexican Sand			$ 1778
1603CTGNM-SD	Sandbar			$ 1778
1603CTGNM-ST	Sterling Silver			$ 1778
1603CTGNM-WH	White			$ 1423

OPTIONS

SKU	Description	MSRP
4200BRASDRSF	2” Brass Surefit Joint Shower Drain Brass drain material Snap in strainer-stainless steel No-caulk connection.	$ 48
30UPLT	Extra reinforcement for after market accessories installment. Order per wall Reinforcement is applied 30 inches and up **ONLY**,	$ 63
30UPRT	Extra reinforcement for after market accessories installment. Order per wall Reinforcement is applied 30 inches and up **ONLY**,	$ 63
30UPBK		$ 63

OPTIONS

SKU	Description	MSRP
FLATLT	Extra reinforcement for after market accessories installment. Order per wall Reinforcement is applied to flat surface areas.	$ 81
FLATRT	Extra reinforcement for after market accessories installment Order per wall Reinforcement is applied to flat surface areas.	$ 81
FLATBK	Extra reinforcement for after market accessories installment. Order per wall Reinforcement is applied to flat surface areas.	$ 81
SC	Ultra strong honeycomb reinforcement for demanding applications that require additional strength	$ 101
35RKBO	Finish repair kit - Case of 12 Available in White **(WH)**, or Bone **(BO)**,	$ 303
35RKWH		$ 303

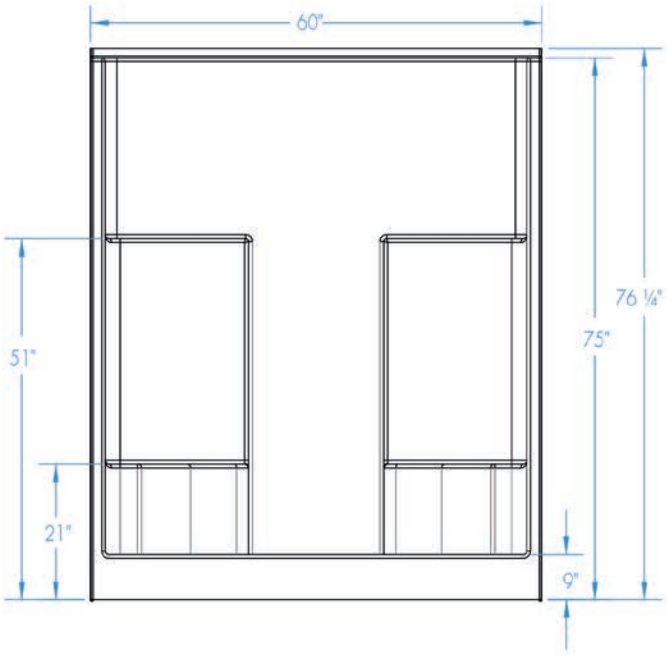
60"
76 ¼"
75"
51"
21"
9"

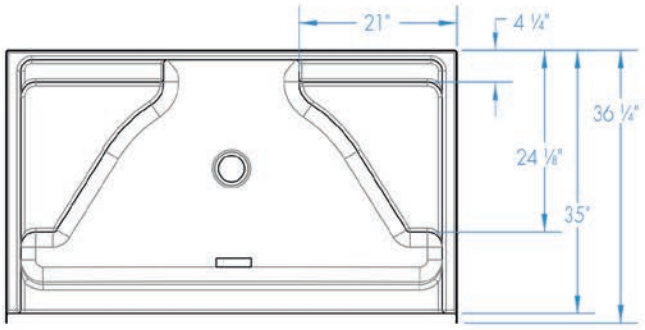
21"
4 ¼"
36 ¼"
24 ⅛"
35"

1603DTS



Material : AcrylX™

Features

- 1-Piece Shower stall
- Decorative diagonal tile design is easy to clean
- Molded seat (Left or right hand)
- Molded toiletry shelves
- Slip-resistant textured floor for safety
- Center drain
- AcrylX™ applied acrylic surface

1603DTS - PRICING CATEGORY : EF

SKU	Color	Configuration	Dimensions & Weight	MSRP
1603DTSL-AL	Almond	Left seat, center drain	60” x 36” x 76” / 142 lb 1524mm x 914mm x 1930mm / 64.4 kg	$ 1508
1603DTSL-BI	Biscuit			$ 1508
1603DTSL-BK	Black			$ 1828
1603DTSL-BO	Bone			$ 1508
1603DTSL-LN	Linen			$ 1508
1603DTSL-ME	Mexican Sand			$ 1828
1603DTSL-SD	Sandbar			$ 1828
1603DTSL-ST	Sterling Silver			$ 1828
1603DTSL-WH	White			$ 1473
1603DTSR-AL	Almond	Right seat, center drain		$ 1508
1603DTSR-BI	Biscuit			$ 1508
1603DTSR-BK	Black			$ 1828
1603DTSR-BO	Bone			$ 1508
1603DTSR-LN	Linen			$ 1508
1603DTSR-ME	Mexican Sand			$ 1828
1603DTSR-SD	Sandbar			$ 1828
1603DTSR-ST	Sterling Silver			$ 1828
1603DTSR-WH	White			$ 1473

OPTIONS

SKU	Description	MSRP
4200BRASDRSF	2” Brass Surefit Joint Shower Drain Brass drain material Snap in strainer-stainless steel No-caulk connection.	$ 48
30UPLT	Extra reinforcement for after market accessories installment. Order per wall Reinforcement is applied 30 inches and up **ONLY**,	$ 63
30UPRT	Extra reinforcement for after market accessories installment. Order per wall Reinforcement is applied 30 inches and up **ONLY**,	$ 63
30UPBK		$ 63
FLATLT	Extra reinforcement for after market accessories installment. Order per wall Reinforcement is applied to flat surface areas.	$ 81
FLATRT	Extra reinforcement for after market accessories installment Order per wall Reinforcement is applied to flat surface areas.	$ 81
FLATBK	Extra reinforcement for after market accessories installment. Order per wall Reinforcement is applied to flat surface areas.	$ 81
SC	Ultra strong honeycomb reinforcement for demanding applications that require additional strength	$ 101
35RKBO	Finish repair kit - Case of 12 Available in White **(WH)**, or Bone **(BO)**,	$ 303
35RKWH		$ 303

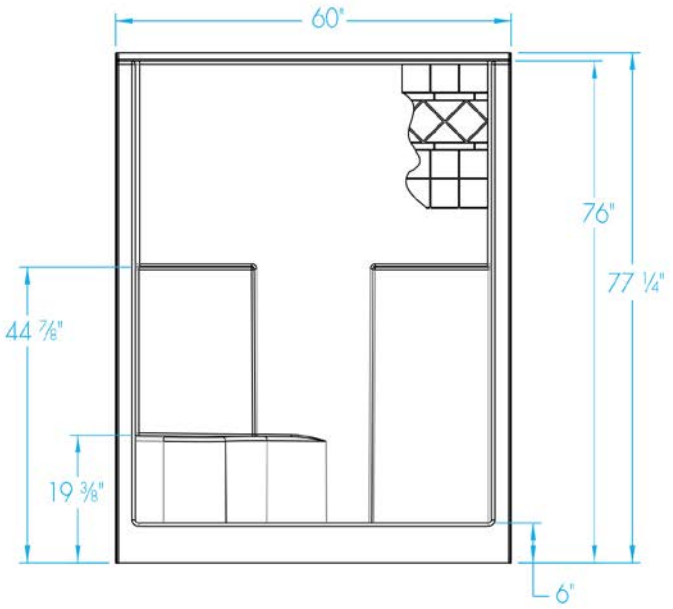
60"
76"
77 ¼"
44 ⅞"
19 ⅜"
6"

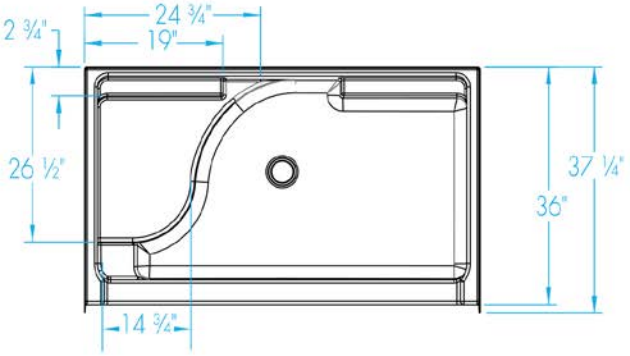
2 ¾"
24 ¾"
19"
26 ½"
37 ¼"
36"
14 ¾"

1603DTSM AFR





Material : AcrylX™

Features

- 1-Piece Shower stall
- Decorative diagonal tile design is easy to clean
- Molded seat (Left or right hand)
- Molded toiletry shelves
- This AFR unit accommodates the installation of drain above the floor
- Slip-resistant textured floor for safety
- Center drain
- AcrylX™ applied acrylic surface

1603DTSM AFR - PRICING CATEGORY : EF

SKU	Color	Configuration	Dimensions & Weight	MSRP
1603DTSML-AL	Almond	Left seat, center drain	60” x 36” x 79” / 142 lb 1524mm x 914mm x 2007mm / 64.4 kg	$ 1578
1603DTSML-BI	Biscuit			$ 1578
1603DTSML-BK	Black			$ 1898
1603DTSML-BO	Bone			$ 1578
1603DTSML-LN	Linen			$ 1578
1603DTSML-ME	Mexican Sand			$ 1898
1603DTSML-SD	Sandbar			$ 1898
1603DTSML-ST	Sterling Silver			$ 1898
1603DTSML-WH	White			$ 1543
1603DTSMR-AL	Almond	Right seat, center drain		$ 1578
1603DTSMR-BI	Biscuit			$ 1578
1603DTSMR-BK	Black			$ 1898
1603DTSMR-BO	Bone			$ 1578
1603DTSMR-LN	Linen			$ 1578
1603DTSMR-ME	Mexican Sand			$ 1898
1603DTSMR-SD	Sandbar			$ 1898
1603DTSMR-ST	Sterling Silver			$ 1898
1603DTSMR-WH	White			$ 1543

OPTIONS

SKU	Description	MSRP
4200BRASDRSF	2” Brass Surefit Joint Shower Drain Brass drain material Snap in strainer-stainless steel No-caulk connection.	$ 48
30UPLT	Extra reinforcement for after market accessories installment. Order per wall Reinforcement is applied 30 inches and up **ONLY**,	$ 63
30UPRT	Extra reinforcement for after market accessories installment. Order per wall Reinforcement is applied 30 inches and up **ONLY**,	$ 63
30UPBK		$ 63
FLATLT	Extra reinforcement for after market accessories installment. Order per wall Reinforcement is applied to flat surface areas.	$ 81
FLATRT	Extra reinforcement for after market accessories installment Order per wall Reinforcement is applied to flat surface areas.	$ 81
FLATBK	Extra reinforcement for after market accessories installment. Order per wall Reinforcement is applied to flat surface areas.	$ 81
SC	Ultra strong honeycomb reinforcement for demanding applications that require additional strength	$ 101
35RKBO	Finish repair kit - Case of 12 Available in White **(WH)**, or Bone **(BO)**,	$ 303
35RKWH		$ 303

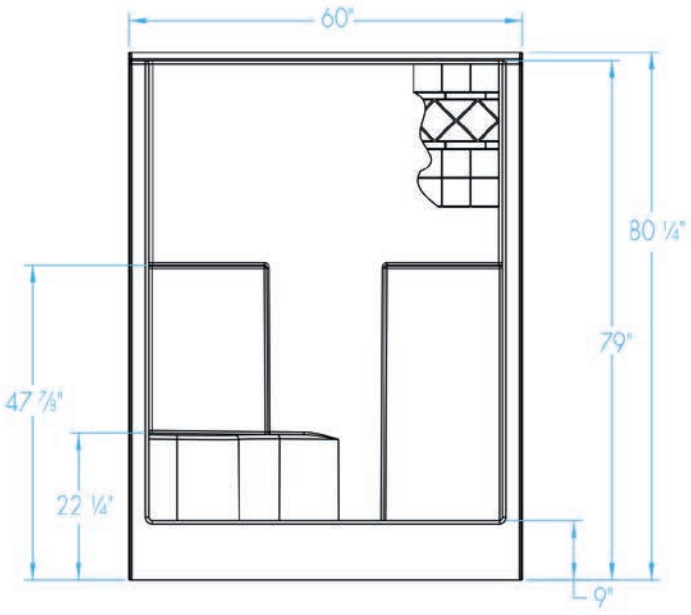
60"
80 ¼"
79"
47 ⅞"
22 ¼"
9"

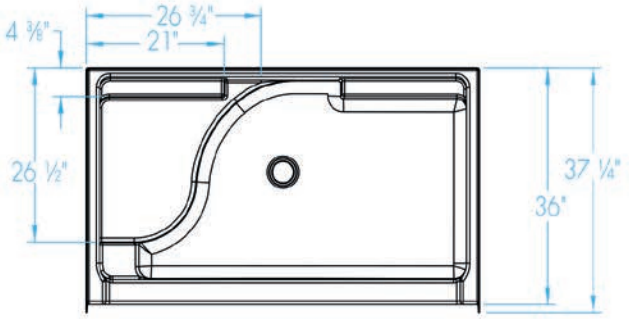
4 ⅜"
26 ¾"
21"
26 ½"
37 ¼"
36"

1603SG

Material : AcrylX™

Features

- 1-Piece Shower stall
- Smooth wall finish is easy to clean
- Molded seats (2)
- Molded toiletry shelves
- Slip-resistant textured floor for safety
- Center drain
- AcrylX™ applied acrylic surface

1603SG - PRICING CATEGORY : EF

SKU	Color	Configuration	Dimensions & Weight	MSRP
1603SG-AL	Almond	Two seats, center drain	60” x 35” x 72” / 121 lb 1524mm x 889mm x 1829mm / 54.88 kg	$ 1329
1603SG-BI	Biscuit			$ 1329
1603SG-BK	Black			$ 1649
1603SG-BO	Bone			$ 1329
1603SG-LN	Linen			$ 1329
1603SG-ME	Mexican Sand			$ 1649
1603SG-SD	Sandbar			$ 1649
1603SG-ST	Sterling Silver			$ 1649
1603SG-WH	White			$ 1294

OPTIONS

SKU	Description	MSRP
4200BRASDRSF	2” Brass Surefit Joint Shower Drain Brass drain material Snap in strainer-stainless steel No-caulk connection.	$ 48
30UPLT	Extra reinforcement for after market accessories installment. Order per wall Reinforcement is applied 30 inches and up **ONLY**,	$ 63
30UPRT	Extra reinforcement for after market accessories installment. Order per wall Reinforcement is applied 30 inches and up **ONLY**,	$ 63
30UPBK		$ 63

OPTIONS

SKU	Description	MSRP
FLATLT	Extra reinforcement for after market accessories installment. Order per wall Reinforcement is applied to flat surface areas.	$ 81
FLATRT	Extra reinforcement for after market accessories installment Order per wall Reinforcement is applied to flat surface areas.	$ 81
FLATBK	Extra reinforcement for after market accessories installment. Order per wall Reinforcement is applied to flat surface areas.	$ 81
35RKBO	Finish repair kit - Case of 12 Available in White **(WH)**, or Bone **(BO)**,	$ 303
35RKWH		$ 303

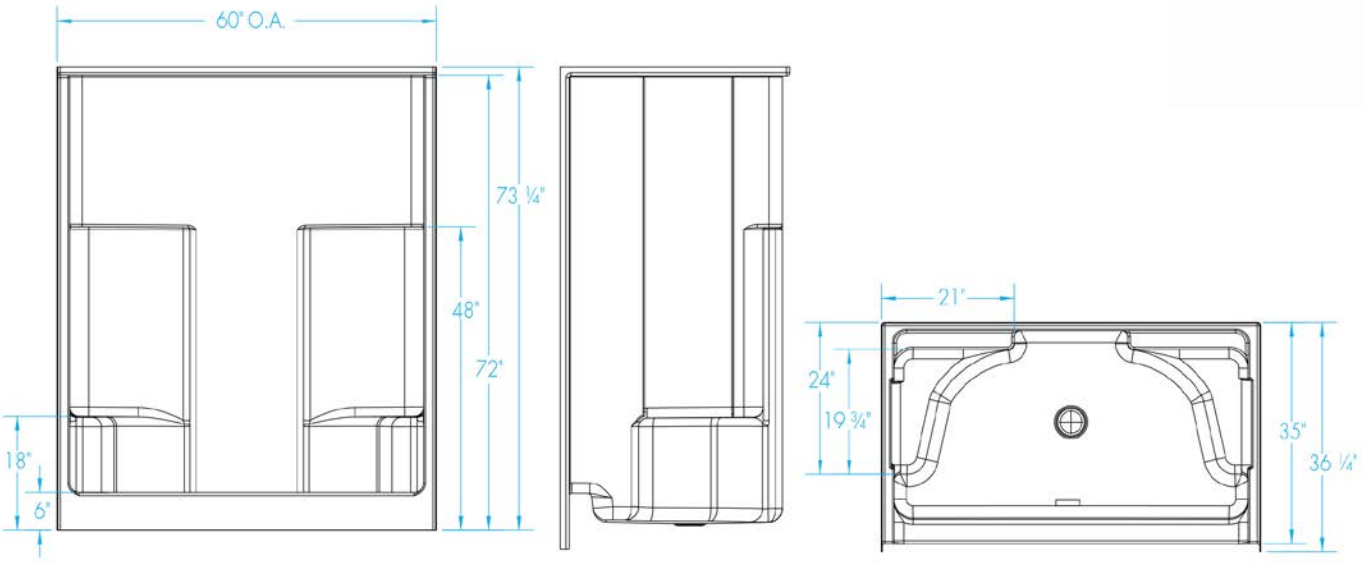
60" O.A.
73 ¼"
48"
72"
18"
6"
21"
24"
19 ¾"
35"
36 ¼"

1603SGM AFR



Material : AcrylX™

Features

- 1-Piece Shower stall
- Smooth wall finish is easy to clean
- Molded seats (2)
- Molded toiletry shelves
- This AFR unit accommodates the installation of drain above the floor
- Slip-resistant textured floor for safety
- Center drain
- AcrylX™ applied acrylic surface

1603SGM AFR - PRICING CATEGORY : EF

SKU	Color	Configuration	Dimensions & Weight	MSRP
1603SGM-AL	Almond	Two seats, center drain	60” x 35” x 75” / 123 lb 1524mm x 889mm x 1905mm / 55.78 kg	$ 1498
1603SGM-BI	Biscuit			$ 1498
1603SGM-BK	Black			$ 1818
1603SGM-BO	Bone			$ 1498
1603SGM-LN	Linen			$ 1498
1603SGM-ME	Mexican Sand			$ 1818
1603SGM-SD	Sandbar			$ 1818
1603SGM-ST	Sterling Silver			$ 1818
1603SGM-WH	White			$ 1463

OPTIONS

SKU	Description	MSRP
4200BRASDRSF	2” Brass Surefit Joint Shower Drain Brass drain material Snap in strainer-stainless steel No-caulk connection.	$ 48
30UPLT	Extra reinforcement for after market accessories installment. Order per wall Reinforcement is applied 30 inches and up **ONLY**,	$ 63
30UPRT	Extra reinforcement for after market accessories installment. Order per wall Reinforcement is applied 30 inches and up **ONLY**,	$ 63
30UPBK		$ 63

OPTIONS

SKU	Description	MSRP
FLATLT	Extra reinforcement for after market accessories installment. Order per wall Reinforcement is applied to flat surface areas.	$ 81
FLATRT	Extra reinforcement for after market accessories installment Order per wall Reinforcement is applied to flat surface areas.	$ 81
FLATBK	Extra reinforcement for after market accessories installment. Order per wall Reinforcement is applied to flat surface areas.	$ 81
35RKBO	Finish repair kit - Case of 12 Available in White **(WH)**, or Bone **(BO)**,	$ 303
35RKWH		$ 303

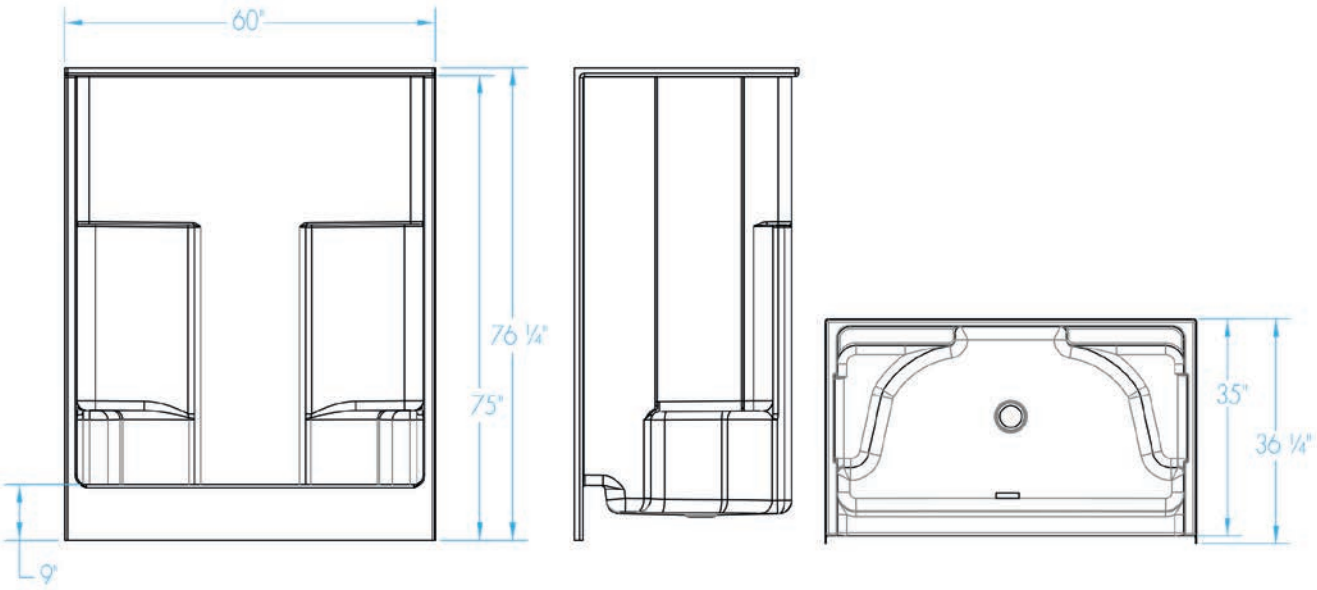
60"
76 ¼"
75"
9"
35"
36 ¼"

1603STC



Material : AcrylX™

Features

- 1-Piece Shower stall
- Smooth tile finish is easy to clean, no messy grout
- Molded seat (Left or right hand)
- Molded toiletry shelves
- Slip-resistant textured floor for safety
- Center drain
- AcrylX™ applied acrylic surface

1603STC - PRICING CATEGORY : EF

SKU	Color	Configuration	Dimensions & Weight	MSRP
1603STCL-AL	Almond	Left seat, center drain	60” x 35” x 76” / 138 lb 1524mm x 889mm x 1930mm / 62.59 kg	$ 1425
1603STCL-BI	Biscuit			$ 1425
1603STCL-BK	Black			$ 1745
1603STCL-BO	Bone			$ 1425
1603STCL-LN	Linen			$ 1425
1603STCL-ME	Mexican Sand			$ 1745
1603STCL-SD	Sandbar			$ 1745
1603STCL-ST	Sterling Silver			$ 1745
1603STCL-WH	White			$ 1390
1603STCR-AL	Almond	Right seat, center drain		$ 1425
1603STCR-BI	Biscuit			$ 1425
1603STCR-BK	Black			$ 1745
1603STCR-BO	Bone			$ 1425
1603STCR-LN	Linen			$ 1425
1603STCR-ME	Mexican Sand			$ 1745
1603STCR-SD	Sandbar			$ 1745
1603STCR-ST	Sterling Silver			$ 1745
1603STCR-WH	White			$ 1390

OPTIONS

SKU	Description	MSRP
4200BRASDRSF	2” Brass Surefit Joint Shower Drain Brass drain material Snap in strainer-stainless steel No-caulk connection.	$ 48
30UPLT	Extra reinforcement for after market accessories installment. Order per wall Reinforcement is applied 30 inches and up **ONLY**,	$ 63
30UPRT	Extra reinforcement for after market accessories installment. Order per wall Reinforcement is applied 30 inches and up **ONLY**,	$ 63
30UPBK		$ 63
FLATLT	Extra reinforcement for after market accessories installment. Order per wall Reinforcement is applied to flat surface areas.	$ 81
FLATRT	Extra reinforcement for after market accessories installment Order per wall Reinforcement is applied to flat surface areas.	$ 81
FLATBK	Extra reinforcement for after market accessories installment. Order per wall Reinforcement is applied to flat surface areas.	$ 81
SC	Ultra strong honeycomb reinforcement for demanding applications that require additional strength	$ 101
35RKBO	Finish repair kit - Case of 12 Available in White **(WH)**, or Bone **(BO)**,	$ 303
35RKWH		$ 303

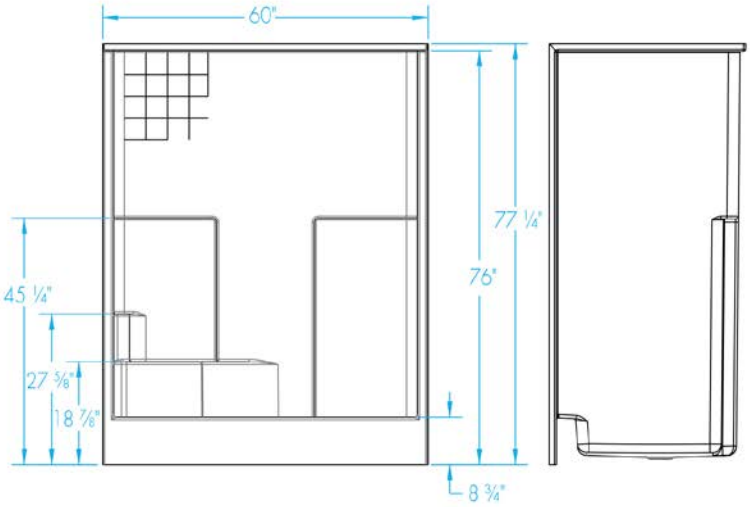
60"
77 ¼"
76"
45 ¼"
27 ⅝"
18 ⅞"
8 ¾"

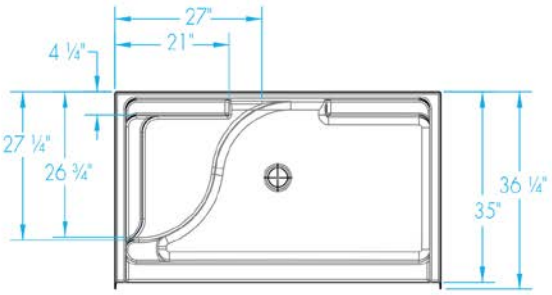
27"
21"
4 ¼"
27 ¼"
26 ¾"
36 ¼"
35"

1603STS





Material : AcrylX™

Features

- 1-Piece Shower stall
- Smooth wall finish is easy to clean
- Integral toiletry shelves
- Slip-resistant textured floor for safety
- Left or right single seat
- Center Drain
- AcrylX™ applied acrylic surface
- East zone only

1603STS - PRICING CATEGORY : EF

SKU	Color	Configuration	Dimensions & Weight	MSRP
1603STSL-AL	Almond	Left seat, center drain	60” x 36” x 76” / 144 lb 1524mm x 914mm x 1930mm / 65.31 kg	$ 1329
1603STSL-BI	Biscuit			$ 1329
1603STSL-BK	Black			$ 1649
1603STSL-BO	Bone			$ 1329
1603STSL-LN	Linen			$ 1329
1603STSL-ME	Mexican Sand			$ 1649
1603STSL-SD	Sandbar			$ 1649
1603STSL-ST	Sterling Silver			$ 1649
1603STSL-WH	White			$ 1294
1603STSR-AL	Almond	Right seat, center drain		$ 1329
1603STSR-BI	Biscuit			$ 1329
1603STSR-BK	Black			$ 1649
1603STSR-BO	Bone			$ 1329
1603STSR-LN	Linen			$ 1329
1603STSR-ME	Mexican Sand			$ 1649
1603STSR-SD	Sandbar			$ 1649
1603STSR-ST	Sterling Silver			$ 1649
1603STSR-WH	White			$ 1294

OPTIONS

SKU	Description	MSRP
4200BRASDRSF	2” Brass Surefit Joint Shower Drain Brass drain material Snap in strainer-stainless steel No-caulk connection.	$ 48
30UPLT	Extra reinforcement for after market accessories installment. Order per wall Reinforcement is applied 30 inches and up **ONLY**,	$ 63
30UPRT	Extra reinforcement for after market accessories installment. Order per wall Reinforcement is applied 30 inches and up **ONLY**,	$ 63
30UPBK		$ 63
FLATLT	Extra reinforcement for after market accessories installment. Order per wall Reinforcement is applied to flat surface areas.	$ 81
FLATRT	Extra reinforcement for after market accessories installment Order per wall Reinforcement is applied to flat surface areas.	$ 81
FLATBK	Extra reinforcement for after market accessories installment. Order per wall Reinforcement is applied to flat surface areas.	$ 81
35RKBO	Finish repair kit - Case of 12 Available in White **(WH)**, or Bone **(BO)**,	$ 303
35RKWH		$ 303

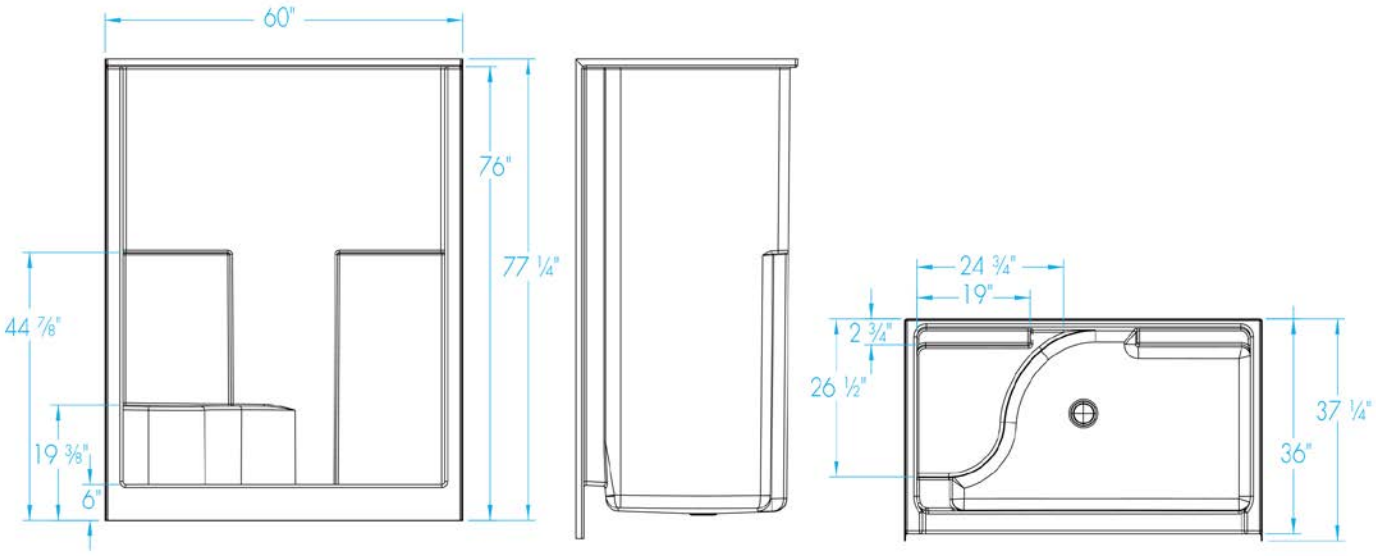
60"
76"
77 ¼"
44 ⅞"
19 ⅜"
6"
24 ¾"
19"
2 ¾"
26 ½"
37 ¼"
36"

1603STSM AFR





Material : AcrylX™

Features

- 1-Piece Shower stall
- Smooth wall finish is easy to clean
- Integral toiletry shelves
- This AFR unit accommodates the installation of drain above the floor
- Slip resistant, textured bottom
- Left or right single seat
- Center drain
- AcrylX™ applied acrylic surface
- East zone only

1603STSM AFR - PRICING CATEGORY : EF

SKU	Color	Configuration	Dimensions & Weight	MSRP
1603STSML-AL	Almond	Left seat, center drain	60” x 36” x 79” / 144 lb 1524mm x 914mm x 2007mm / 65.31 kg	$ 1390
1603STSML-BI	Biscuit			$ 1390
1603STSML-BK	Black			$ 1710
1603STSML-BO	Bone			$ 1390
1603STSML-LN	Linen			$ 1390
1603STSML-ME	Mexican Sand			$ 1710
1603STSML-SD	Sandbar			$ 1710
1603STSML-ST	Sterling Silver			$ 1710
1603STSML-WH	White			$ 1355
1603STSMR-AL	Almond	Right seat, center drain		$ 1390
1603STSMR-BI	Biscuit			$ 1390
1603STSMR-BK	Black			$ 1710
1603STSMR-BO	Bone			$ 1390
1603STSMR-LN	Linen			$ 1390
1603STSMR-ME	Mexican Sand			$ 1710
1603STSMR-SD	Sandbar			$ 1710
1603STSMR-ST	Sterling Silver			$ 1710
1603STSMR-WH	White			$ 1355

OPTIONS

SKU	Description	MSRP
4200BRASDRSF	2” Brass Surefit Joint Shower Drain Brass drain material Snap in strainer-stainless steel No-caulk connection.	$ 48
30UPLT	Extra reinforcement for after market accessories installment. Order per wall Reinforcement is applied 30 inches and up **ONLY**,	$ 63
30UPRT	Extra reinforcement for after market accessories installment. Order per wall Reinforcement is applied 30 inches and up **ONLY**,	$ 63
30UPBK		$ 63
FLATLT	Extra reinforcement for after market accessories installment. Order per wall Reinforcement is applied to flat surface areas.	$ 81
FLATRT	Extra reinforcement for after market accessories installment Order per wall Reinforcement is applied to flat surface areas.	$ 81
FLATBK	Extra reinforcement for after market accessories installment. Order per wall Reinforcement is applied to flat surface areas.	$ 81
35RKBO	Finish repair kit - Case of 12 Available in White **(WH)**, or Bone **(BO)**,	$ 303
35RKWH		$ 303

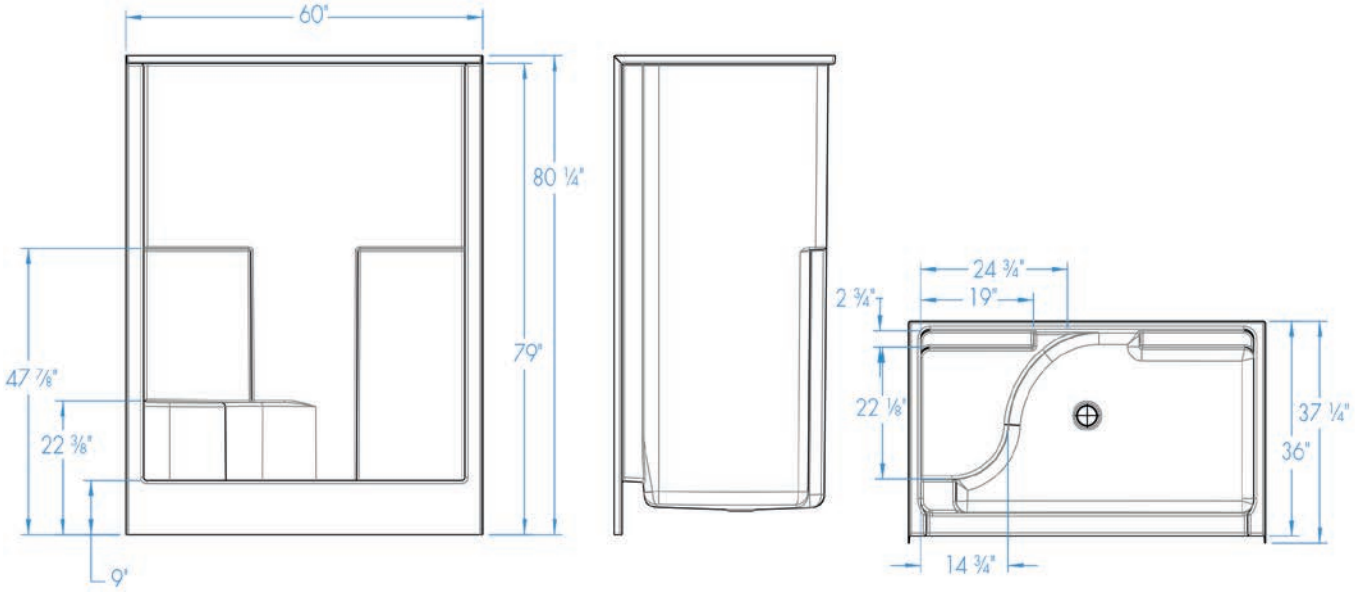
60"
80 ¼"
79"
47 ⅞"
22 ⅜"
9"
24 ¾"
19"
2 ¾"
22 ⅛"
37 ¼"
36"
14 ¾"

1603TSC





Material : AcrylX™

Features

- 1-Piece Shower stall
- Smooth wall finish is easy to clean
- Molded toiletry shelves
- Slip-resistant textured floor for safety
- Center drain
- AcrylX™ applied acrylic surface
- East zone only

1603TSC - PRICING CATEGORY : EF

SKU	Color	Configuration	Dimensions & Weight	MSRP
1603TSC-AL	Almond	Center Drain	60” x 33” x 76 1/4” / 143 lb 1524mm x 838mm x 1937mm / 64.85 kg	$ 1329
1603TSC-BI	Biscuit			$ 1329
1603TSC-BK	Black			$ 1649
1603TSC-BO	Bone			$ 1329
1603TSC-LN	Linen			$ 1329
1603TSC-ME	Mexican Sand			$ 1649
1603TSC-SD	Sandbar			$ 1649
1603TSC-ST	Sterling Silver			$ 1649
1603TSC-WH	White			$ 1294

OPTIONS

SKU	Description	MSRP
4200BRASDRSF	2” Brass Surefit Joint Shower Drain Brass drain material Snap in strainer-stainless steel No-caulk connection.	$ 48
30UPLT	Extra reinforcement for after market accessories installment. Order per wall Reinforcement is applied 30 inches and up **ONLY**,	$ 63
30UPRT	Extra reinforcement for after market accessories installment. Order per wall Reinforcement is applied 30 inches and up **ONLY**,	$ 63
30UPBK		$ 63

OPTIONS

SKU	Description	MSRP
FLATLT	Extra reinforcement for after market accessories installment. Order per wall Reinforcement is applied to flat surface areas.	$ 81
FLATRT	Extra reinforcement for after market accessories installment Order per wall Reinforcement is applied to flat surface areas.	$ 81
FLATBK	Extra reinforcement for after market accessories installment. Order per wall Reinforcement is applied to flat surface areas.	$ 81
SC	Ultra strong honeycomb reinforcement for demanding applications that require additional strength	$ 101
35RKBO	Finish repair kit - Case of 12 Available in White **(WH)**, or Bone **(BO)**,	$ 303
35RKWH		$ 303

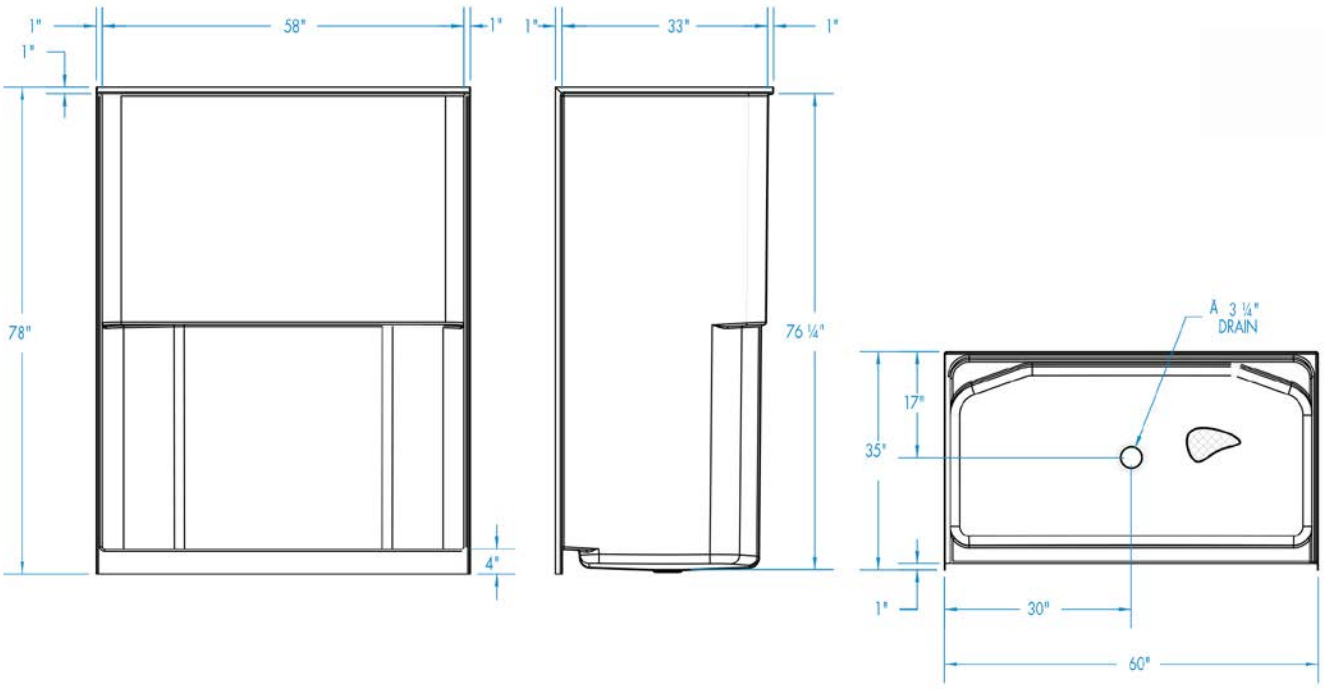
1"
58"
1"
1"
1"
33"
1"
78"
4"
76 ¼"
Ø 3 ¼"
DRAIN
17"
35"
1"
30"
60"

16042C2ST



Material : AcrylX™

Features

- 1-Piece Shower
- Subway tile (16x8) is modern and easy to maintain
- Molded seats (2)
- Molded toiletry shelves
- Low 4 Inch threshold
- Slip-resistant textured floor for safety
- Center drain
- Available in the West Zone only

16042C2ST - PRICING CATEGORY : EF

SKU	Color	Configuration	Dimensions & Weight	MSRP
16042C2ST-AL	Almond	Two seats, center drain	60” x 42” x 76” / 130 lb 1524mm x 1067mm x 1930mm / 58.96 kg	$ 1527
16042C2ST-BI	Biscuit			$ 1527
16042C2ST-BO	Bone			$ 1527
16042C2ST-ST	Sterling Silver			$ 1847
16042C2ST-WH	White			$ 1492

OPTIONS

SKU	Description	MSRP
4200BRASDRSF	2” Brass Surefit Joint Shower Drain Brass drain material Snap in strainer-stainless steel No-caulk connection.	$ 48
30UPLT	Extra reinforcement for after market accessories installment. Order per wall Reinforcement is applied 30 inches and up **ONLY**,	$ 63
30UPRT	Extra reinforcement for after market accessories installment. Order per wall Reinforcement is applied 30 inches and up **ONLY**,	$ 63
30UPBK		$ 63
FLATLT	Extra reinforcement for after market accessories installment. Order per wall Reinforcement is applied to flat surface areas.	$ 81
FLATRT	Extra reinforcement for after market accessories installment Order per wall Reinforcement is applied to flat surface areas.	$ 81
FLATBK	Extra reinforcement for after market accessories installment. Order per wall Reinforcement is applied to flat surface areas.	$ 81

OPTIONS

SKU	Description	MSRP
35RKBO	Finish repair kit - Case of 12 Available in White **(WH)**, or Bone **(BO)**,	$ 303
35RKWH		$ 303

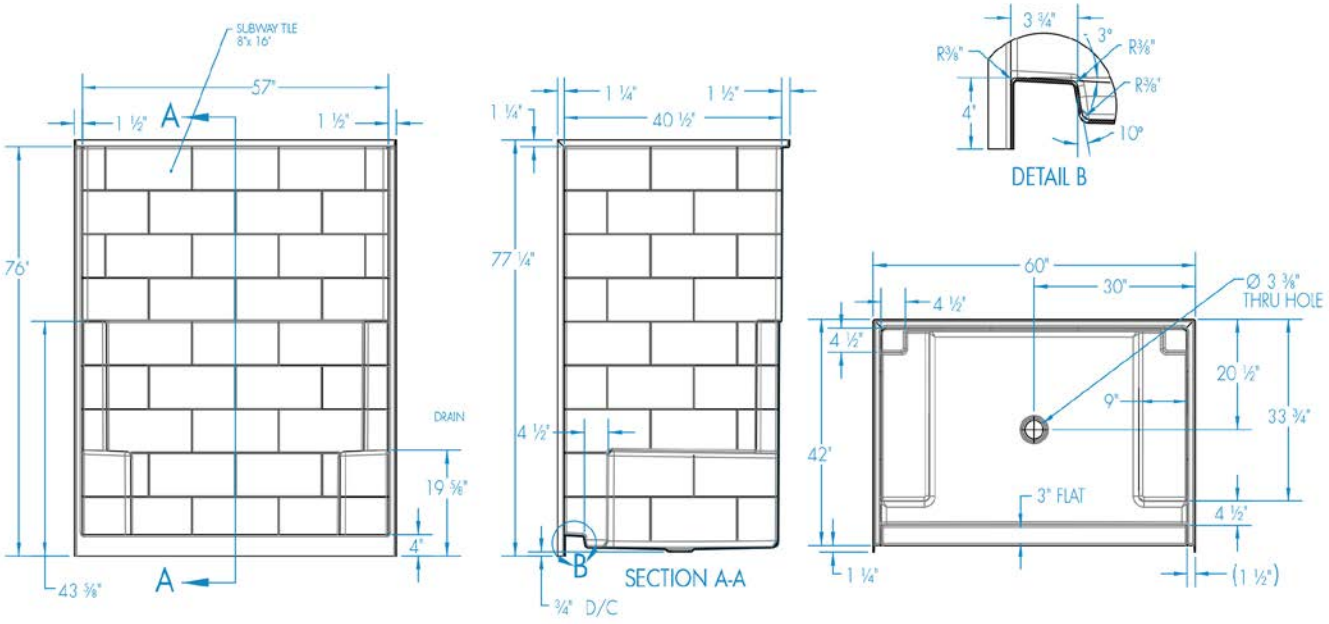
SUBWAY TILE
8"x 16"
57"
1 ½"
1 ½"
A
76"
DRAIN
19 ⅝"
4"
43 ⅜"
A
1 ¼"
1 ¼"
1 ½"
40 ½"
77 ¼"
4 ½"
B
¾" D/C
SECTION A-A
3 ¾"
3"
R⅜"
R⅜"
R⅜"
4"
10"
DETAIL B
60"
30"
Ø 3 ⅜"
THRU HOLE
4 ½"
4 ½"
20 ½"
9"
33 ¾"
42"
3" FLAT
4 ½"
1 ¼"
(1 ½")

16042DEST





Material : AcrylX™

Features

- 1-Piece Shower stall
- Subway tile (16x8) is modern and easy to maintain
- Molded toiletry shelves
- Low threshold - 4 Inch double entry
- Enclosure opening 39-1/2 Inches - 57-1/2 Inches
- Slip-resistant textured floor for safety
- Center drain
- Available in the West Zone only

16042DEST - PRICING CATEGORY : EF

SKU	Color	Configuration	Dimensions & Weight	MSRP
16042DESTL-AL	Almond	Left-hand Drain	60” x 42” x 76” / 142 lb 1524mm x 1067mm x 1930mm / 64.4 kg	$ 1508
16042DESTL-BI	Biscuit			$ 1508
16042DESTL-BO	Bone			$ 1508
16042DESTL-ST	Sterling Silver			$ 1828
16042DESTL-WH	White			$ 1473
16042DESTR-AL	Almond	Right-hand Drain		$ 1508
16042DESTR-BI	Biscuit			$ 1508
16042DESTR-BO	Bone			$ 1508
16042DESTR-ST	Sterling Silver			$ 1828
16042DESTR-WH	White			$ 1473

OPTIONS

SKU	Description	MSRP
4200BRASDRSF	2” Brass Surefit Joint Shower Drain Brass drain material Snap in strainer-stainless steel No-caulk connection.	$ 48
30UPLT	Extra reinforcement for after market accessories installment. Order per wall Reinforcement is applied 30 inches and up **ONLY**,	$ 63
30UPRT	Extra reinforcement for after market accessories installment. Order per wall Reinforcement is applied 30 inches and up **ONLY**,	$ 63

OPTIONS

SKU	Description	MSRP
30UPBK	Extra reinforcement for after market accessories installment. Order per wall Reinforcement is applied 30 inches and up **ONLY**,	$ 63
FLATLT	Extra reinforcement for after market accessories installment. Order per wall Reinforcement is applied to flat surface areas.	$ 81
FLATRT	Extra reinforcement for after market accessories installment Order per wall Reinforcement is applied to flat surface areas.	$ 81
FLATBK	Extra reinforcement for after market accessories installment. Order per wall Reinforcement is applied to flat surface areas.	$ 81
35RKBO	Finish repair kit - Case of 12 Available in White **(WH)**, or Bone **(BO)**,	$ 303
35RKWH		$ 303

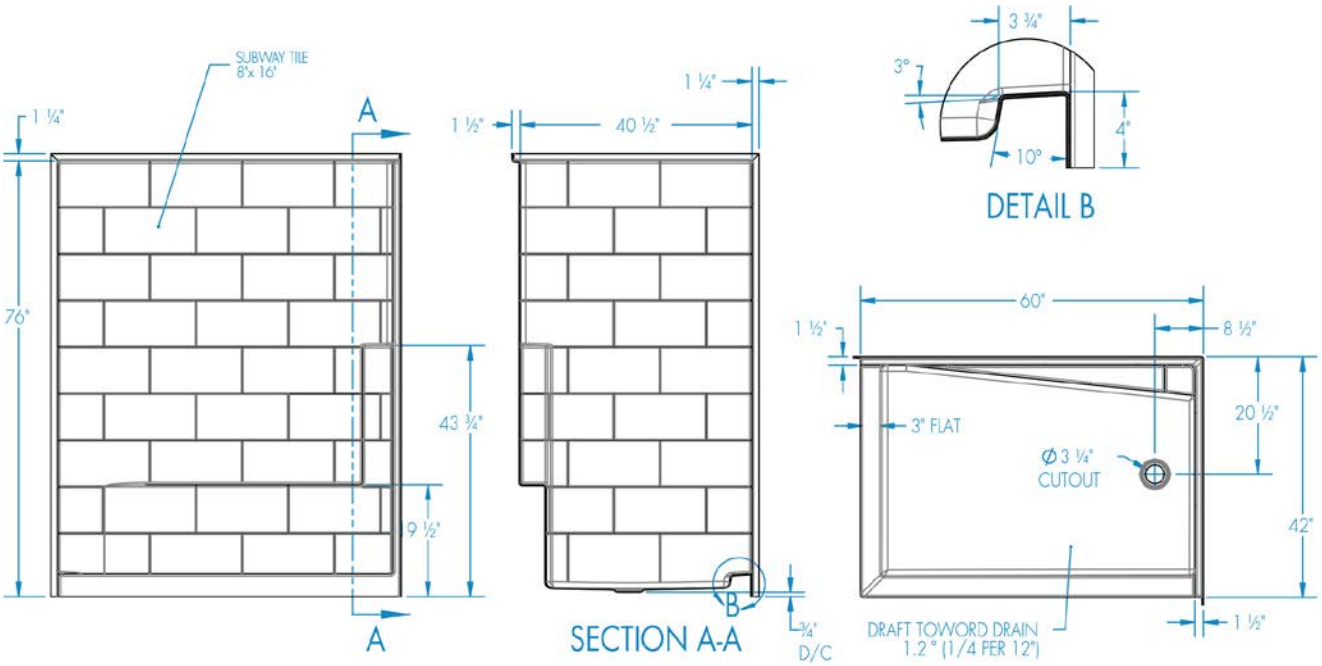
SUBWAY TILE
8"x 16"
1 ¼"
A
76"
43 ¾"
19 ½"
A
1 ½"
40 ½"
1 ¼"
B
¾"
D/C
SECTION A-A
3 ¾"
3°
4"
10°
DETAIL B
60"
1 ½"
8 ½"
20 ½"
3" FLAT
Ø 3 ¼"
CUTOUT
42"
DRAFT TOWORD DRAIN
1.2° (1/4 PER 12")
1 ½"

36AC



Material : Premium Cast Acrylic

Features

- 1-Piece Shower
- Decorative back wall
- Slip-resistant floor, textured bottom
- Face Pack
- Center drain

36AC - PRICING CATEGORY : AM

SKU	Color	Configuration	Dimensions & Weight	MSRP
36AC-BI	Biscuit	Center Drain	36” x 36” x 84” / 130 lb 914mm x 914mm x 2134mm / 58.96 kg	$ 1698
36AC-WH	White			$ 1663

OPTIONS

SKU	Description	MSRP
4200BRASDRSF	2” Brass Surefit Joint Shower Drain Brass drain material Snap in strainer-stainless steel No-caulk connection.	$ 48
DLN1	Ships ready to install - 120 Volt	$ 228

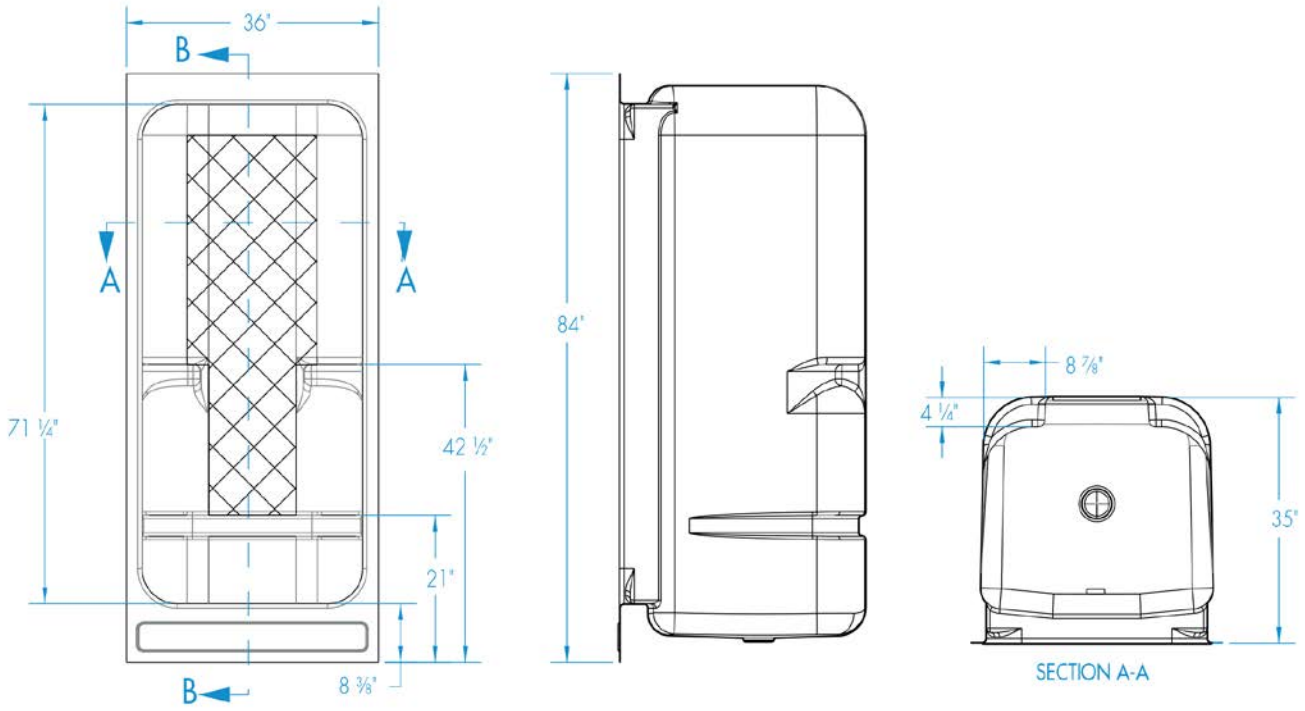
36"
B
A
A
71 ¼"
42 ½"
21"
8 ⅜"
B
84"
8 ⅞"
4 ¼"
35"
SECTION A-A

36ACTRIB





Material : Premium Cast Acrylic

Features

- 1-Piece Shower
- Decorative back wall
- 3-piec
- Molded toiletry shelves
- Slip-resistant, textured floor
- Center drain
- Premium cast acrylic surface
- Face Pack
- East zone only
- Limited

36ACTRIB - PRICING CATEGORY : AM

SKU	Color	Configuration	Dimensions & Weight	MSRP
36ACTRIB-BI	Biscuit	Center Drain	36” x 36” x 84” / 154 lb 914mm x 914mm x 2134mm / 69.84 kg	$ 2023
36ACTRIB-WH	White			$ 1988

OPTIONS

SKU	Description	MSRP
4200BRASDRSF	2” Brass Surefit Joint Shower Drain Brass drain material Snap in strainer-stainless steel No-caulk connection.	$ 48
DLN1	Ships ready to install - 120 Volt	$ 228

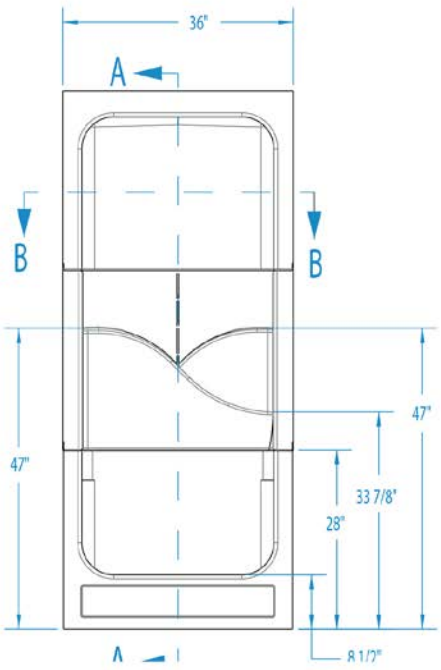

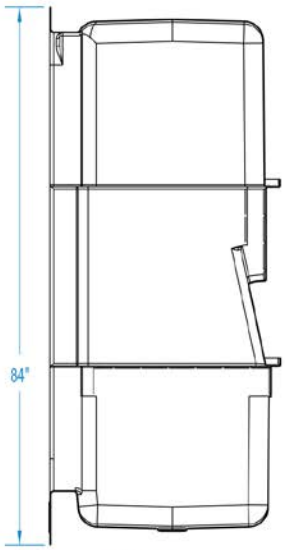

SECTION A-A

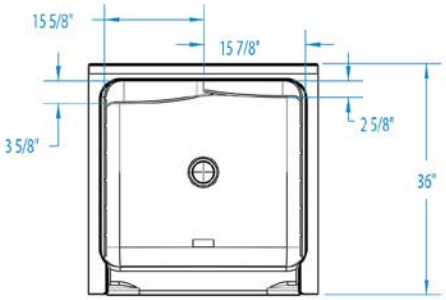

48ACS



Material : Premium Cast Acrylic

Features

- 1-Piece Shower
- Decorative back wall
- Slip-resistant floor, textured bottom
- Face Pack
- 1 seat (LH or RH)
- Molded toiletry shelves
- Center drain

48ACS - PRICING CATEGORY : AM

SKU	Color	Configuration	Dimensions & Weight	MSRP
48ACSL-BI	Biscuit	Left seat, center drain	48” x 36” x 84” / 156 lb 1219mm x 914mm x 2134mm / 70.75 kg	$ 1722
48ACSL-WH	White			$ 1687
48ACSR-BI	Biscuit	Right seat, center drain		$ 1722
48ACSR-WH	White			$ 1687

OPTIONS

SKU	Description	MSRP
4200BRASDRSF	2” Brass Surefit Joint Shower Drain Brass drain material Snap in strainer-stainless steel No-caulk connection.	$ 48
DLN1	Ships ready to install - 120 Volt	$ 228

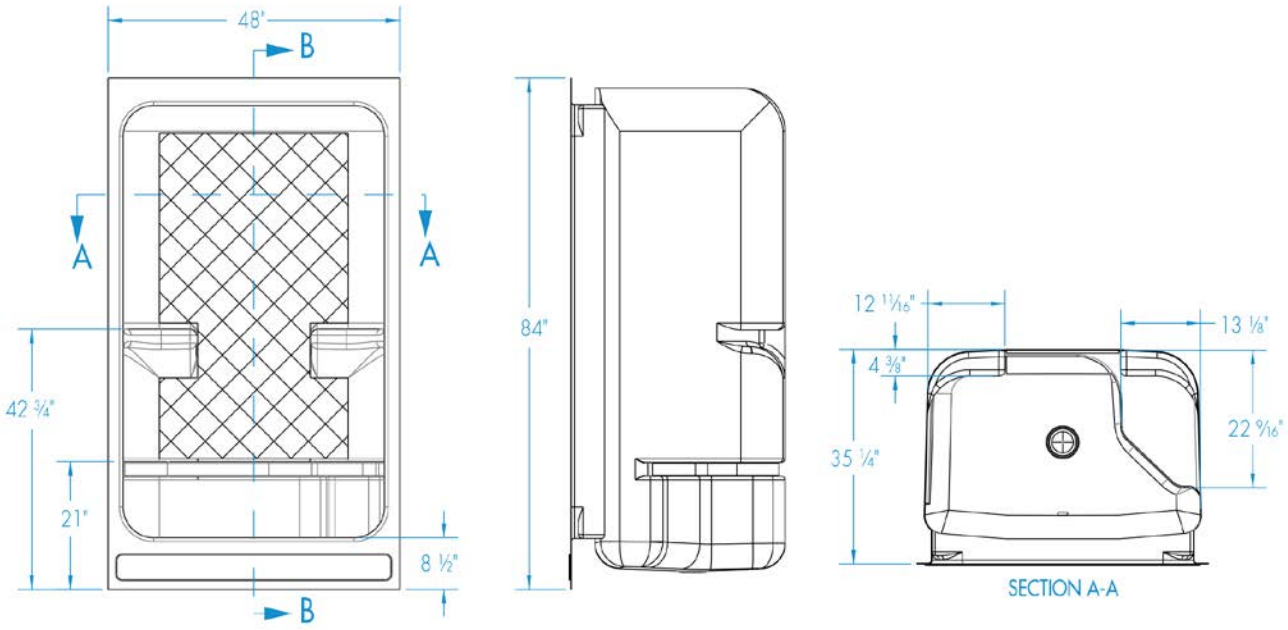
48"
B
A
A
42 ¾"
21"
8 ½"
B
84"
12 1⁄16"
13 ⅛"
4 ⅜"
22 9⁄16"
35 ¼"
SECTION A-A

2543CTG





Material : AcrylX™

Features

- Space-saving 1-Piece tub shower
- Textured square tile wall finish is easy to clean with no messy grout lines
- Molded toiletry shelves
- Center rear drain
- Slip resistant, textured floor for safety
- AcrlyX™ applied acrylic surface

2543CTG - PRICING CATEGORY : EF

SKU	System	Color	Configuration	Dimensions & Weight	MSRP
2543CTG-AL	Soaker - No System	Almond	Back Center Drain	54” x 29” x 72” / 116 lb 1372mm x 737mm x 1829mm / 52.61 kg	$ 1521
2543CTG-BI		Biscuit			$ 1521
2543CTG-BK		Black			$ 1841
2543CTG-BO		Bone			$ 1521
2543CTG-LN		Linen			$ 1521
2543CTG-ME		Mexican Sand			$ 1841
2543CTG-SD		Sandbar			$ 1841
2543CTG-ST		Sterling Silver			$ 1841
2543CTG-WH		White			$ 1486

OPTIONS

SKU	Description	MSRP
DDWO-PC	Designer drain waste & overflow kit Available finishes: White **(WH)**, Bone **(BO)**, Polished Chrome **(PC)**, Polished Brass**(PB)**, Brushed Nickel**(BN)**,	$ 288
DDWO-PB	Designer drain waste & overflow kit Available finishes: White **(WH)**, Bone **(BO)**, Polished Chrome **(PC)**, Polished Brass**(PB)**, Brushed Nickel**(BN)**,	$ 288
DDWO-BO	Designer drain waste & overflow kit Available finishes: White **(WH)**, Bone **(BO)**, Polished Chrome **(PC)**, Polished Brass**(PB)**, Brushed Nickel**(BN)**,	$ 288
DDWO-WH		$ 288
DDWO-BN		$ 288
30UPLT	Extra reinforcement for after market accessories installment. Order per wall Reinforcement is applied 30 inches and up **ONLY**,	$ 63

OPTIONS

SKU	Description	MSRP
30UPRT	Extra reinforcement for after market accessories installment. Order per wall Reinforcement is applied 30 inches and up **ONLY**,	$ 63
30UPBK		$ 63
FLATLT	Extra reinforcement for after market accessories installment. Order per wall Reinforcement is applied to flat surface areas.	$ 81
FLATRT	Extra reinforcement for after market accessories installment Order per wall Reinforcement is applied to flat surface areas.	$ 81
FLATBK	Extra reinforcement for after market accessories installment. Order per wall Reinforcement is applied to flat surface areas.	$ 81
SC	Ultra strong honeycomb reinforcement for demanding applications that require additional strength	$ 101
35RKBO	Finish repair kit - Case of 12 Available in White **(WH)**, or Bone **(BO)**,	$ 303
35RKWH		$ 303

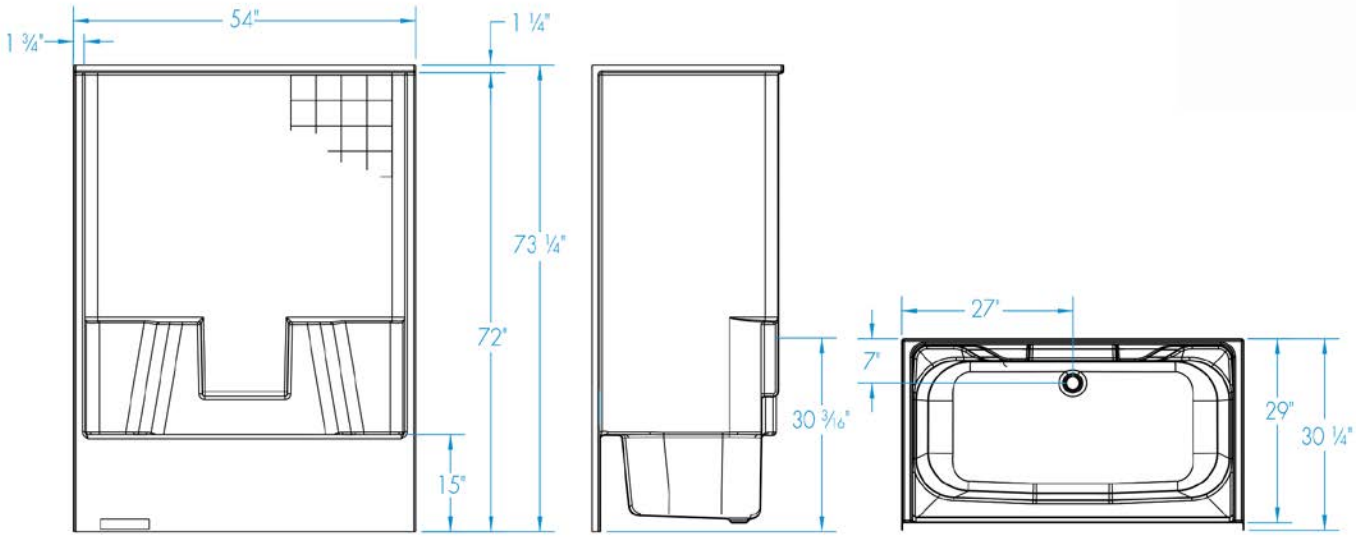
1 ¾"
54"
1 ¼"
73 ¼"
72"
15"
30 3⁄16"
27"
7"
29"
30 ¼"

2543CTGM AFR





Material : AcrylX™

Features

- Space-saving 1-Piece tub shower
- Textured square tile wall finish is easy to clean with no messy grout lines
- Molded toiletry shelves
- Center rear drain
- This AFR unit accommodates the installation of drain, waste and overflow above the floor
- Slip resistant, textured floor for safety
- AcrlyX™ applied acrylic surface

2543CTGM AFR - PRICING CATEGORY : EF

SKU	System	Color	Configuration	Dimensions & Weight	MSRP
2543CTGM-AL	Soaker - No System	Almond	Back Center Drain	54” x 29” x 76” / 119 lb 1372mm x 737mm x 1930mm / 53.97 kg	$ 1587
2543CTGM-BI		Biscuit			$ 1587
2543CTGM-BK		Black			$ 1907
2543CTGM-BO		Bone			$ 1587
2543CTGM-LN		Linen			$ 1587
2543CTGM-ME		Mexican Sand			$ 1907
2543CTGM-SD		Sandbar			$ 1907
2543CTGM-ST		Sterling Silver			$ 1907
2543CTGM-WH		White			$ 1552

OPTIONS

SKU	Description	MSRP
DDWO-PC	Designer drain waste & overflow kit Available finishes: White **(WH)**, Bone **(BO)**, Polished Chrome **(PC)**, Polished Brass**(PB)**, Brushed Nickel**(BN)**,	$ 288
DDWO-PB	Designer drain waste & overflow kit Available finishes: White **(WH)**, Bone **(BO)**, Polished Chrome **(PC)**, Polished Brass**(PB)**, Brushed Nickel**(BN)**,	$ 288
DDWO-BO	Designer drain waste & overflow kit Available finishes: White **(WH)**, Bone **(BO)**, Polished Chrome **(PC)**, Polished Brass**(PB)**, Brushed Nickel**(BN)**,	$ 288
DDWO-WH		$ 288
DDWO-BN		$ 288
30UPLT	Extra reinforcement for after market accessories installment. Order per wall Reinforcement is applied 30 inches and up **ONLY**,	$ 63

OPTIONS

SKU	Description	MSRP
30UPRT	Extra reinforcement for after market accessories installment. Order per wall Reinforcement is applied 30 inches and up **ONLY**,	$ 63
30UPBK		$ 63
FLATLT	Extra reinforcement for after market accessories installment. Order per wall Reinforcement is applied to flat surface areas.	$ 81
FLATRT	Extra reinforcement for after market accessories installment Order per wall Reinforcement is applied to flat surface areas.	$ 81
FLATBK	Extra reinforcement for after market accessories installment. Order per wall Reinforcement is applied to flat surface areas.	$ 81
SC	Ultra strong honeycomb reinforcement for demanding applications that require additional strength	$ 101
35RKBO	Finish repair kit - Case of 12 Available in White **(WH)**, or Bone **(BO)**,	$ 303
35RKWH		$ 303

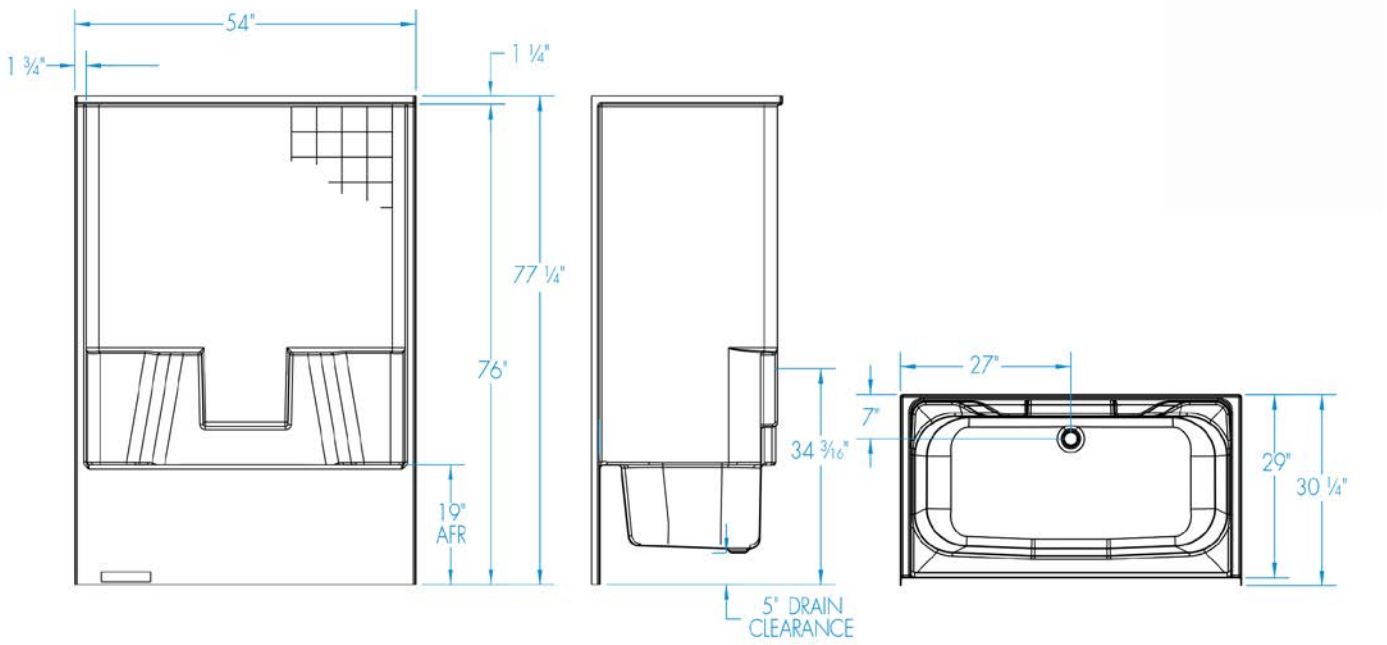
54"
1 ¾"
1 ¼"
77 ¼"
76"
19"
AFR
34 3⁄16"
5" DRAIN
CLEARANCE
27"
7"
29"
30 ¼"

2543GC





Material : AcrylX™

Features

- Space-saving 1-Piece tub shower
- Smooth wall finish
- Molded toiletry shelves
- Center rear drain
- Slip resistant, textured floor for safety
- AcrlyX™ applied acrylic surface

2543GC - PRICING CATEGORY : EF

SKU	System	Color	Configuration	Dimensions & Weight	MSRP
2543GC-AL	Soaker - No System	Almond	Back Center Drain	54” x 29” x 72” / 119 lb 1372mm x 737mm x 1829mm / 53.97 kg	$ 1287
2543GC-BI		Biscuit			$ 1287
2543GC-BK		Black			$ 1607
2543GC-BO		Bone			$ 1287
2543GC-LN		Linen			$ 1287
2543GC-ME		Mexican Sand			$ 1607
2543GC-SD		Sandbar			$ 1607
2543GC-ST		Sterling Silver			$ 1607
2543GC-WH		White			$ 1252

OPTIONS

SKU	Description	MSRP
DDWO-PC	Designer drain waste & overflow kit Available finishes: White **(WH)**, Bone **(BO)**, Polished Chrome **(PC)**, Polished Brass**(PB)**, Brushed Nickel**(BN)**,	$ 288
DDWO-PB	Designer drain waste & overflow kit Available finishes: White **(WH)**, Bone **(BO)**, Polished Chrome **(PC)**, Polished Brass**(PB)**, Brushed Nickel**(BN)**,	$ 288
DDWO-BO	Designer drain waste & overflow kit Available finishes: White **(WH)**, Bone **(BO)**, Polished Chrome **(PC)**, Polished Brass**(PB)**, Brushed Nickel**(BN)**,	$ 288
DDWO-WH		$ 288
DDWO-BN		$ 288
30UPLT	Extra reinforcement for after market accessories installment. Order per wall Reinforcement is applied 30 inches and up **ONLY**,	$ 63

OPTIONS

SKU	Description	MSRP
30UPRT	Extra reinforcement for after market accessories installment. Order per wall Reinforcement is applied 30 inches and up **ONLY**,	$ 63
30UPBK		$ 63
FLATLT	Extra reinforcement for after market accessories installment. Order per wall Reinforcement is applied to flat surface areas.	$ 81
FLATRT	Extra reinforcement for after market accessories installment Order per wall Reinforcement is applied to flat surface areas.	$ 81
FLATBK	Extra reinforcement for after market accessories installment. Order per wall Reinforcement is applied to flat surface areas.	$ 81
SC	Ultra strong honeycomb reinforcement for demanding applications that require additional strength	$ 101
35RKBO	Finish repair kit - Case of 12 Available in White **(WH)**, or Bone **(BO)**,	$ 303
35RKWH		$ 303

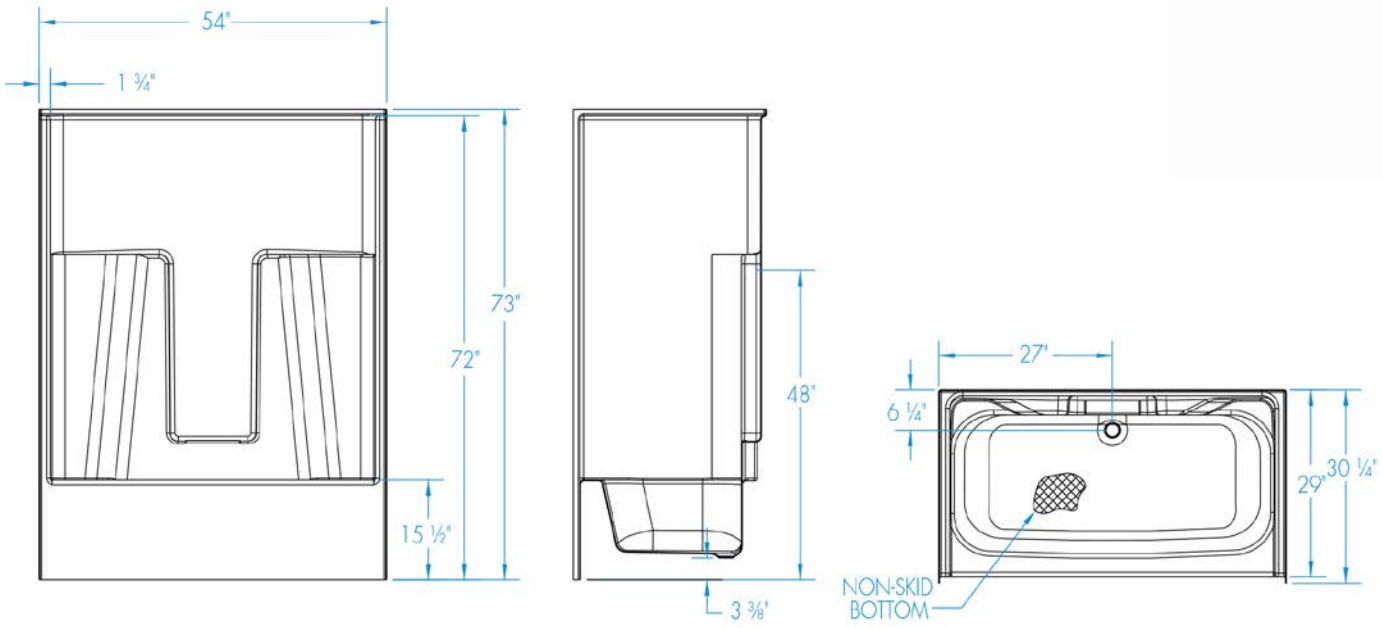
54"
1 ¾"
73"
72"
15 ½"
48"
3 ⅜"
27"
6 ¼"
29"
30 ¼"
NON-SKID
BOTTOM

2543N2P





Material : AcrylX™

Features

- 2-Piece tub shower ideal for remodeling projects
- Smooth wall finish
- Molded toiletry shelf
- Requires 59 Inch turning space
- Left or right hand drain
- Slip resistant, textured floor for safety
- AcrlyX™ applied acrylic surface

2543N2P - PRICING CATEGORY : ER

SKU	System	Color	Configuration	Dimensions & Weight	MSRP
2543N2PL-AL	Soaker - No System	Almond	Left-hand Drain	54” x 29” x 72” / 121 lb 1372mm x 737mm x 1829mm / 54.88 kg	$ 1287
2543N2PL-BI		Biscuit			$ 1287
2543N2PL-BK		Black			$ 1607
2543N2PL-BO		Bone			$ 1287
2543N2PL-LN		Linen			$ 1287
2543N2PL-ME		Mexican Sand			$ 1607
2543N2PL-SD		Sandbar			$ 1607
2543N2PL-ST		Sterling Silver			$ 1607
2543N2PL-WH		White			$ 1252
2543N2PR-AL		Almond	Right-hand Drain		$ 1287
2543N2PR-BI		Biscuit			$ 1287
2543N2PR-BK		Black			$ 1607
2543N2PR-BO		Bone			$ 1287
2543N2PR-LN		Linen			$ 1287
2543N2PR-ME		Mexican Sand			$ 1607
2543N2PR-SD		Sandbar			$ 1607
2543N2PR-ST		Sterling Silver			$ 1607
2543N2PR-WH		White			$ 1252

OPTIONS

SKU	Description	MSRP
DDWO-PC	Designer drain waste & overflow kit Available finishes: White **(WH)**, Bone **(BO)**, Polished Chrome **(PC)**, Polished Brass**(PB)**, Brushed Nickel**(BN)**,	$ 288
DDWO-PB	Designer drain waste & overflow kit Available finishes: White **(WH)**, Bone **(BO)**, Polished Chrome **(PC)**, Polished Brass**(PB)**, Brushed Nickel**(BN)**,	$ 288
DDWO-BO	Designer drain waste & overflow kit Available finishes: White **(WH)**, Bone **(BO)**, Polished Chrome **(PC)**, Polished Brass**(PB)**, Brushed Nickel**(BN)**,	$ 288
DDWO-WH		$ 288
DDWO-BN		$ 288
30UPLT	Extra reinforcement for after market accessories installment. Order per wall Reinforcement is applied 30 inches and up **ONLY**,	$ 63
30UPRT		$ 63
30UPBK		$ 63
FLATLT	Extra reinforcement for after market accessories installment. Order per wall Reinforcement is applied to flat surface areas.	$ 81
FLATRT	Extra reinforcement for after market accessories installment Order per wall Reinforcement is applied to flat surface areas.	$ 81
FLATBK	Extra reinforcement for after market accessories installment. Order per wall Reinforcement is applied to flat surface areas.	$ 81
SC	Ultra strong honeycomb reinforcement for demanding applications that require additional strength	$ 101
35RKBO	Finish repair kit - Case of 12 Available in White **(WH)**, or Bone **(BO)**,	$ 303
35RKWH		$ 303

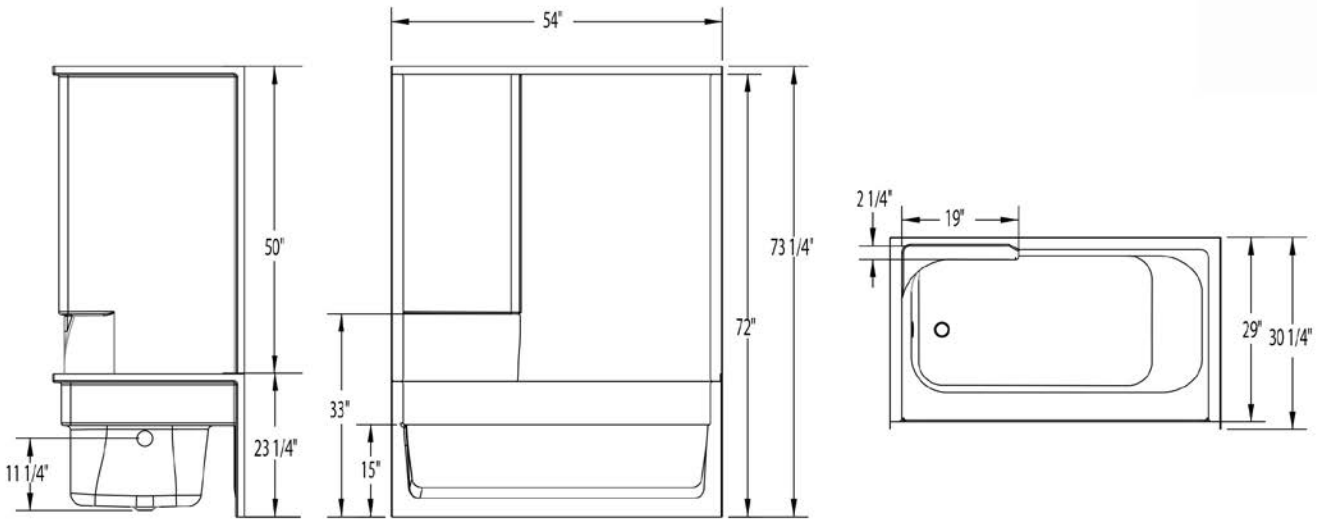
54"
50"
73 1/4"
72"
33"
15"
23 1/4"
11 1/4"
2 1/4"
19"
29"
30 1/4"

260304P





Material : AcrylX™

Features

- 4-Piece tub shower ideal for remodeling projects
- Smooth wall finish
- Molded toiletry shelves
- Left or right hand drain
- Slip resistant, textured floor for safety
- AcrylX™ applied acrylic surface
- West Zone Only

260304P - PRICING CATEGORY : ER

SKU	System	Color	Configuration	Dimensions & Weight	MSRP
260304PL-AL	Soaker - No System	Almond	Left-hand Drain	60” x 30” x 76” / 177 lb 1524mm x 762mm x 1930mm / 80.27 kg	$ 1665
260304PL-BI		Biscuit			$ 1665
260304PL-BK		Black			$ 1985
260304PL-BO		Bone			$ 1665
260304PL-LN		Linen			$ 1665
260304PL-ME		Mexican Sand			$ 1985
260304PL-SD		Sandbar			$ 1985
260304PL-ST		Sterling Silver			$ 1985
260304PL-WH		White			$ 1630
260304PR-AL		Almond	Right-hand Drain		$ 1665
260304PR-BI		Biscuit			$ 1665
260304PR-BK		Black			$ 1985
260304PR-BO		Bone			$ 1665
260304PR-LN		Linen			$ 1665
260304PR-ME		Mexican Sand			$ 1985
260304PR-SD		Sandbar			$ 1985
260304PR-ST		Sterling Silver			$ 1985
260304PR-WH		White			$ 1630

OPTIONS

SKU	Description	MSRP
DDWO-PC	Designer drain waste & overflow kit Available finishes: White **(WH)**, Bone **(BO)**, Polished Chrome **(PC)**, Polished Brass**(PB)**, Brushed Nickel**(BN)**,	$ 288
DDWO-PB	Designer drain waste & overflow kit Available finishes: White **(WH)**, Bone **(BO)**, Polished Chrome **(PC)**, Polished Brass**(PB)**, Brushed Nickel**(BN)**,	$ 288
DDWO-BO	Designer drain waste & overflow kit Available finishes: White **(WH)**, Bone **(BO)**, Polished Chrome **(PC)**, Polished Brass**(PB)**, Brushed Nickel**(BN)**,	$ 288
DDWO-WH		$ 288
DDWO-BN		$ 288
30UPLT	Extra reinforcement for after market accessories installment. Order per wall Reinforcement is applied 30 inches and up **ONLY**,	$ 63
30UPRT		$ 63
30UPBK		$ 63
FLATLT	Extra reinforcement for after market accessories installment. Order per wall Reinforcement is applied to flat surface areas.	$ 81
FLATRT	Extra reinforcement for after market accessories installment Order per wall Reinforcement is applied to flat surface areas.	$ 81
FLATBK	Extra reinforcement for after market accessories installment. Order per wall Reinforcement is applied to flat surface areas.	$ 81
SC	Ultra strong honeycomb reinforcement for demanding applications that require additional strength	$ 101
35RKBO	Finish repair kit - Case of 12 Available in White **(WH)**, or Bone **(BO)**,	$ 303
35RKWH		$ 303

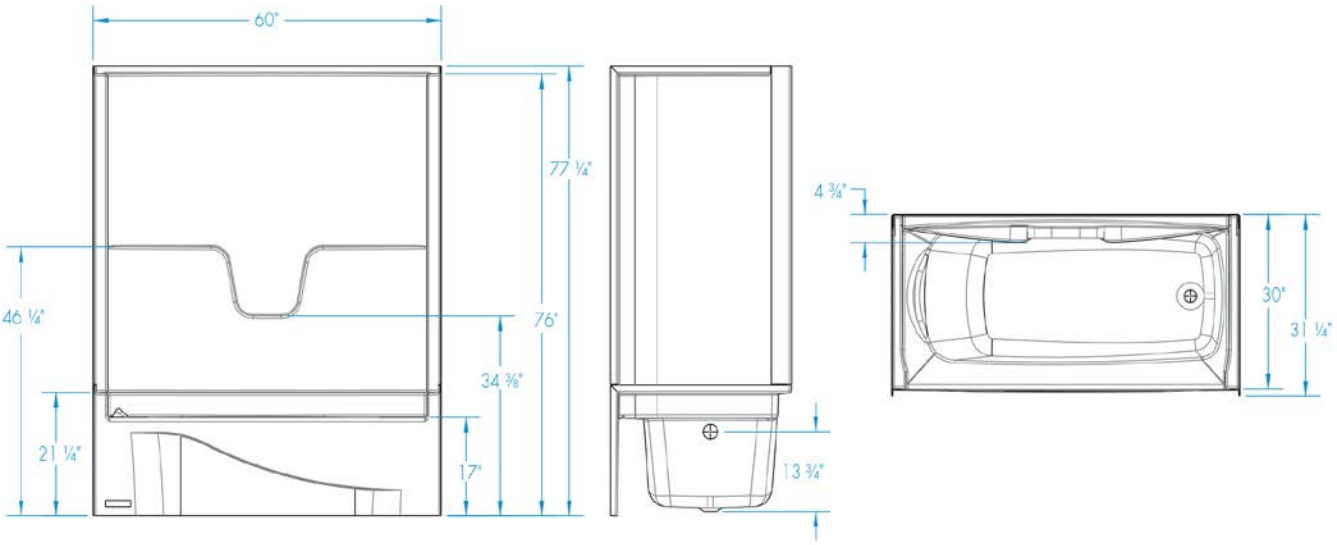
60"
77 ¼"
46 ¼"
76"
34 ⅜"
21 ¼"
17"
4 ¾"
13 ¾"
30"
31 ¼"

260304PS





Material : AcrylX™

Features

- 4-Piece tub shower ideal for remodeling projects
- Smooth wall finish
- Multiple molded toiletry shelves
- Ergonomic backrest for bathing comfort
- Left or right hand drain
- Slip-resistant, textured floor for safety
- AcrylX™ applied acrylic surface

260304PS - PRICING CATEGORY : ER

SKU	System	Color	Configuration	Dimensions & Weight	MSRP
260304PSL-AL	Soaker - No System	Almond	Left-hand Drain	60” x 30” x 76” / 153 lb 1524mm x 762mm x 1930mm / 69.39 kg	$ 1725
260304PSL-BI		Biscuit			$ 1725
260304PSL-BK		Black			$ 2045
260304PSL-BO		Bone			$ 1725
260304PSL-LN		Linen			$ 1725
260304PSL-ME		Mexican Sand			$ 2045
260304PSL-SD		Sandbar			$ 2045
260304PSL-ST		Sterling Silver			$ 2045
260304PSL-WH		White			$ 1690
260304PSR-AL		Almond	Right-hand Drain		$ 1725
260304PSR-BI		Biscuit			$ 1725
260304PSR-BK		Black			$ 2045
260304PSR-BO		Bone			$ 1725
260304PSR-LN		Linen			$ 1725
260304PSR-ME		Mexican Sand			$ 2045
260304PSR-SD		Sandbar			$ 2045
260304PSR-ST		Sterling Silver			$ 2045
260304PSR-WH		White			$ 1690

OPTIONS

SKU	Description	MSRP
DDWO-PC	Designer drain waste & overflow kit Available finishes: White **(WH)**, Bone **(BO)**, Polished Chrome **(PC)**, Polished Brass**(PB)**, Brushed Nickel**(BN)**,	$ 288
DDWO-PB	Designer drain waste & overflow kit Available finishes: White **(WH)**, Bone **(BO)**, Polished Chrome **(PC)**, Polished Brass**(PB)**, Brushed Nickel**(BN)**,	$ 288
DDWO-BO	Designer drain waste & overflow kit Available finishes: White **(WH)**, Bone **(BO)**, Polished Chrome **(PC)**, Polished Brass**(PB)**, Brushed Nickel**(BN)**,	$ 288
DDWO-WH		$ 288
DDWO-BN		$ 288
30UPLT	Extra reinforcement for after market accessories installment. Order per wall Reinforcement is applied 30 inches and up **ONLY**,	$ 63
30UPRT		$ 63
30UPBK		$ 63
FLATLT	Extra reinforcement for after market accessories installment. Order per wall Reinforcement is applied to flat surface areas.	$ 81
FLATRT	Extra reinforcement for after market accessories installment Order per wall Reinforcement is applied to flat surface areas.	$ 81
FLATBK	Extra reinforcement for after market accessories installment. Order per wall Reinforcement is applied to flat surface areas.	$ 81
SC	Ultra strong honeycomb reinforcement for demanding applications that require additional strength	$ 101
35RKBO	Finish repair kit - Case of 12 Available in White **(WH)**, or Bone **(BO)**,	$ 303
35RKWH		$ 303

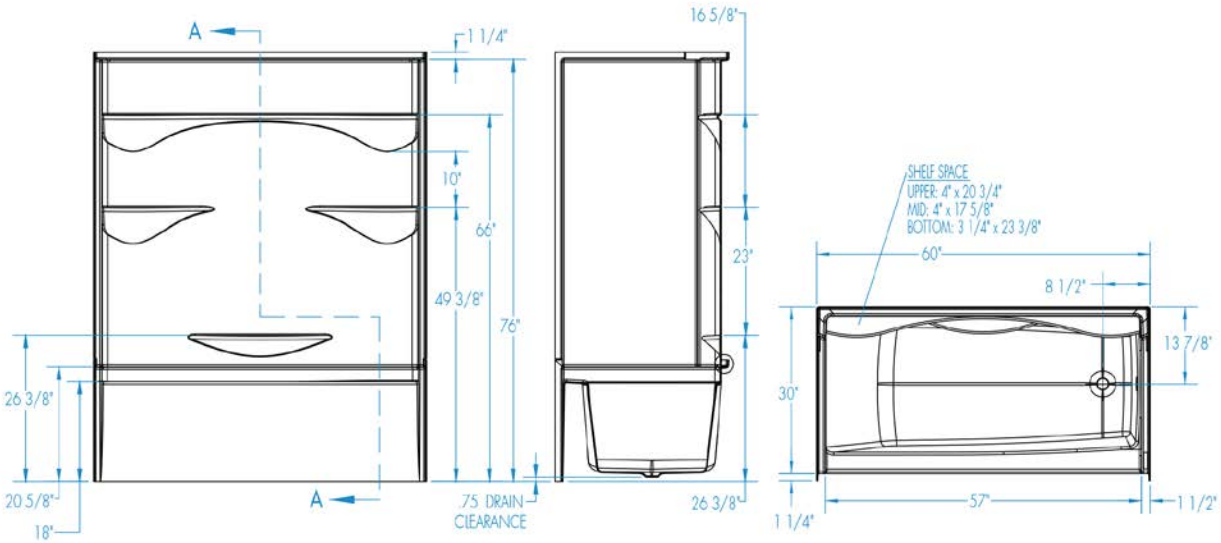
A
1 1/4"
10"
66"
49 3/8"
76"
26 3/8"
20 5/8"
18"
A
.75 DRAIN CLEARANCE
16 5/8"
23"
26 3/8"
SHELF SPACE
UPPER: 4" x 20 3/4"
MID: 4" x 17 5/8"
BOTTOM: 3 1/4" x 23 3/8"
60"
8 1/2"
13 7/8"
30"
1 1/4"
57"
1 1/2"

260304PSM AFR





Material : AcrylX™

Features

- 4-Piece tub shower ideal for remodeling projects
- Smooth wall finish
- Multiple molded toiletry shelves
- Ergonomic backrest for bathing comfort
- This AFR unit accommodates the installation of drain, waste and overflow above the floor
- Left or right hand drain
- Slip resistant, textured floor for safety
- AcrylX™ applied acrylic surface

260304PSM AFR - PRICING CATEGORY : ER

SKU	System	Color	Configuration	Dimensions & Weight	MSRP
260304PSML-BI	Soaker - No System	Biscuit	Left-hand Drain	60” x 30” x 79” / 153 lb 1524mm x 762mm x 2007mm / 69.39 kg	$ 1765
260304PSML-BK		Black			$ 2085
260304PSML-BO		Almond			$ 1765
260304PSML-LN		Linen			$ 1765
260304PSML-ME		Mexican Sand			$ 2085
260304PSML-SD		Sandbar			$ 2085
260304PSML-ST		Sterling Silver			$ 2085
260304PSML-WH		White			$ 1730
260304PSMR-BI		Biscuit	Right-hand Drain		$ 1765
260304PSMR-BK		Black			$ 2085
260304PSMR-BO		Almond			$ 1765
260304PSMR-LN		Linen			$ 1765
260304PSMR-ME		Mexican Sand			$ 2085
260304PSMR-SD		Sandbar			$ 2085
260304PSMR-ST		Sterling Silver			$ 2085
260304PSMR-WH		White			$ 1730

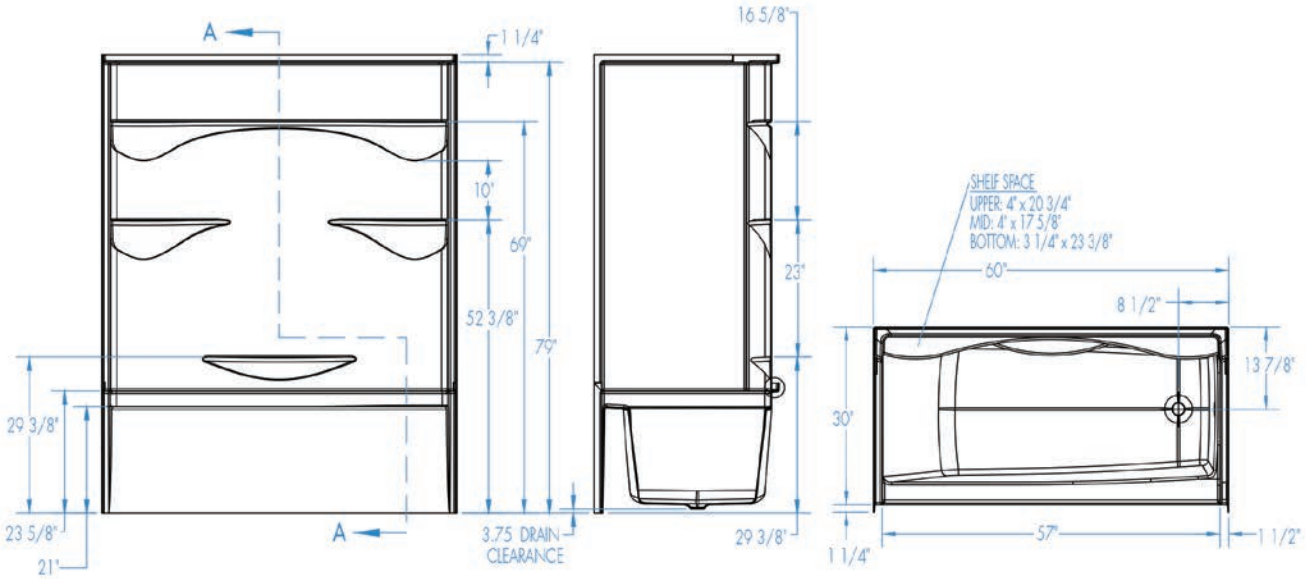
A
1 1/4"
10"
69"
52 3/8"
79"
29 3/8"
23 5/8"
21"
A
3.75 DRAIN CLEARANCE
16 5/8"
23"
29 3/8"
SHELF SPACE
UPPER: 4" x 20 3/4"
MID: 4" x 17 5/8"
BOTTOM: 3 1/4" x 23 3/8"
60"
8 1/2"
13 7/8"
30"
1 1/4"
57"
1 1/2"

260304PST





Material : AcrylX™

Features

- 4-Piece tub shower ideal for remodeling projects
- Large subway tile pattern wall finish is modern looking and easy to clean
- Multiple niche shelves
- Ergonomic backrest for bathing comfort
- Left or right hand drain
- Slip resistant, textured floor for safety
- AcrylX™ applied acrylic surface

260304PST - PRICING CATEGORY : ER

SKU	System	Color	Configuration	Dimensions & Weight	MSRP
260304PSTL-AL	Soaker - No System	Almond	Left-hand Drain	60” x 30” x 76” / 153 lb 1524mm x 762mm x 1930mm / 69.39 kg	$ 1773
260304PSTL-BI		Biscuit			$ 1773
260304PSTL-BK		Black			$ 2093
260304PSTL-BO		Bone			$ 1773
260304PSTL-LN		Linen			$ 1773
260304PSTL-ME		Mexican Sand			$ 2093
260304PSTL-SD		Sandbar			$ 2093
260304PSTL-ST		Sterling Silver			$ 2093
260304PSTL-WH		White			$ 1738
260304PSTR-AL		Almond	Right-hand Drain		$ 1773
260304PSTR-BI		Biscuit			$ 1773
260304PSTR-BK		Black			$ 2093
260304PSTR-BO		Bone			$ 1773
260304PSTR-LN		Linen			$ 1773
260304PSTR-ME		Mexican Sand			$ 2093
260304PSTR-SD		Sandbar			$ 2093
260304PSTR-ST		Sterling Silver			$ 2093
260304PSTR-WH		White			$ 1738

OPTIONS

SKU	Description	MSRP
DDWO-PC	Designer drain waste & overflow kit Available finishes: White **(WH)**, Bone **(BO)**, Polished Chrome **(PC)**, Polished Brass**(PB)**, Brushed Nickel**(BN)**,	$ 288
DDWO-PB	Designer drain waste & overflow kit Available finishes: White **(WH)**, Bone **(BO)**, Polished Chrome **(PC)**, Polished Brass**(PB)**, Brushed Nickel**(BN)**,	$ 288
DDWO-BO	Designer drain waste & overflow kit Available finishes: White **(WH)**, Bone **(BO)**, Polished Chrome **(PC)**, Polished Brass**(PB)**, Brushed Nickel**(BN)**,	$ 288
DDWO-WH		$ 288
DDWO-BN		$ 288
30UPLT	Extra reinforcement for after market accessories installment. Order per wall Reinforcement is applied 30 inches and up **ONLY**,	$ 63
30UPRT		$ 63
30UPBK		$ 63
FLATLT	Extra reinforcement for after market accessories installment. Order per wall Reinforcement is applied to flat surface areas.	$ 81
FLATRT	Extra reinforcement for after market accessories installment Order per wall Reinforcement is applied to flat surface areas.	$ 81
FLATBK	Extra reinforcement for after market accessories installment. Order per wall Reinforcement is applied to flat surface areas.	$ 81
SC	Ultra strong honeycomb reinforcement for demanding applications that require additional strength	$ 101
35RKBO	Finish repair kit - Case of 12 Available in White **(WH)**, or Bone **(BO)**,	$ 303
35RKWH		$ 303

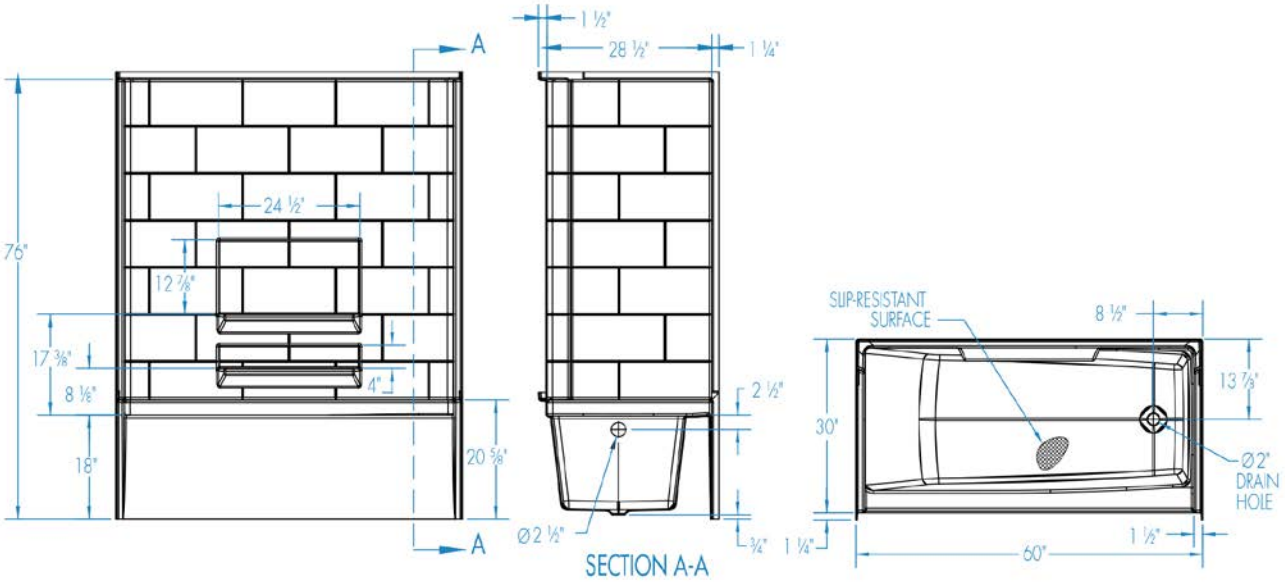
1 ½"
28 ½"
1 ¼"
A
A
76"
24 ½"
12 ⅞"
17 ⅜"
8 ⅛"
4"
18"
20 ⅝"
2 ½"
Ø2 ½"
¾"
SECTION A-A
SLIP-RESISTANT SURFACE
8 ½"
13 ⅞"
30"
Ø2" DRAIN HOLE
1 ¼"
60"
1 ½"

26032P



Material : AcrylX™

Features

- 2-Piece tub shower ideal for remodeling projects
- Smooth wall finish
- Molded toiletry shelves
- Requires 68 Inch turning space
- Left or right hand drain
- Slip-resistant textured floor for safety
- AcrylX™ applied acrylic surface

26032P - PRICING CATEGORY : ER

SKU	System	Color	Configuration	Dimensions & Weight	MSRP
26032PL-AL	Soaker - No System	Almond	Left-hand Drain	60” x 30” x 72” / 134 lb 1524mm x 762mm x 1829mm / 60.77 kg	$ 1186
26032PL-BI		Biscuit			$ 1186
26032PL-BK		Black			$ 1506
26032PL-BO		Bone			$ 1186
26032PL-LN		Linen			$ 1186
26032PL-ME		Mexican Sand			$ 1506
26032PL-SD		Sandbar			$ 1506
26032PL-ST		Sterling Silver			$ 1506
26032PL-WH		White			$ 1151
26032PR-AL		Almond	Right-hand Drain		$ 1186
26032PR-BI		Biscuit			$ 1186
26032PR-BK		Black			$ 1506
26032PR-BO		Bone			$ 1186
26032PR-LN		Linen			$ 1186
26032PR-ME		Mexican Sand			$ 1506
26032PR-SD		Sandbar			$ 1506
26032PR-ST		Sterling Silver			$ 1506
26032PR-WH		White			$ 1151

OPTIONS

SKU	Description	MSRP
DDWO-PC	Designer drain waste & overflow kit Available finishes: White **(WH)**, Bone **(BO)**, Polished Chrome **(PC)**, Polished Brass**(PB)**, Brushed Nickel**(BN)**,	$ 288
DDWO-PB	Designer drain waste & overflow kit Available finishes: White **(WH)**, Bone **(BO)**, Polished Chrome **(PC)**, Polished Brass**(PB)**, Brushed Nickel**(BN)**,	$ 288
DDWO-BO	Designer drain waste & overflow kit Available finishes: White **(WH)**, Bone **(BO)**, Polished Chrome **(PC)**, Polished Brass**(PB)**, Brushed Nickel**(BN)**,	$ 288
DDWO-WH		$ 288
DDWO-BN		$ 288
30UPLT	Extra reinforcement for after market accessories installment. Order per wall Reinforcement is applied 30 inches and up **ONLY**,	$ 63
30UPRT		$ 63
30UPBK		$ 63
FLATLT	Extra reinforcement for after market accessories installment. Order per wall Reinforcement is applied to flat surface areas.	$ 81
FLATRT	Extra reinforcement for after market accessories installment Order per wall Reinforcement is applied to flat surface areas.	$ 81
FLATBK	Extra reinforcement for after market accessories installment. Order per wall Reinforcement is applied to flat surface areas.	$ 81
35RKBO	Finish repair kit - Case of 12 Available in White **(WH)**, or Bone **(BO)**,	$ 303
35RKWH		$ 303

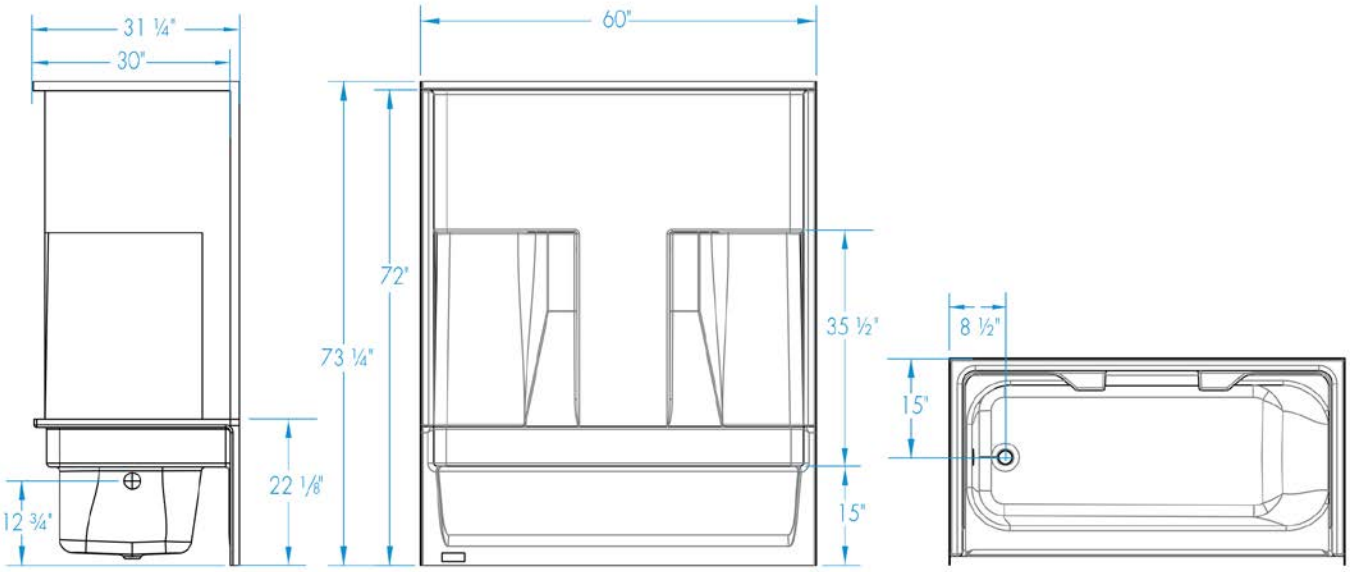
31 ¼"
30"
60"
72"
73 ¼"
35 ½"
8 ½"
15"
22 ⅛"
12 ¾"
15"

260330



Material : AcrylX™

Features

- 1-Piece tub shower
- Smooth wall finish
- Ergonomic backrest for bathing comfort
- Molded toiletry shelves
- Slip resistant, textured floor for safety
- Left or right hand drain
- AcrlyX™ applied acrylic surface

260330 - PRICING CATEGORY : EF

SKU	System	Color	Configuration	Dimensions & Weight	MSRP
260330L-AL	Soaker - No System	Almond	Left-hand Drain	60” x 30” x 72” / 124 lb 1524mm x 762mm x 1829mm / 56.24 kg	$ 1254
260330L-BI		Biscuit			$ 1254
260330L-BK		Black			$ 1574
260330L-BO		Bone			$ 1254
260330L-LN		Linen			$ 1254
260330L-ME		Mexican Sand			$ 1574
260330L-SD		Sandbar			$ 1574
260330L-ST		Sterling Silver			$ 1574
260330L-WH		White			$ 1219
260330R-AL		Almond	Right-hand Drain		$ 1254
260330R-BI		Biscuit			$ 1254
260330R-BK		Black			$ 1574
260330R-BO		Bone			$ 1254
260330R-LN		Linen			$ 1254
260330R-ME		Mexican Sand			$ 1574
260330R-SD		Sandbar			$ 1574
260330R-ST		Sterling Silver			$ 1574
260330R-WH		White			$ 1219

OPTIONS

SKU	Description	MSRP
DDWO-PC	Designer drain waste & overflow kit Available finishes: White **(WH)**, Bone **(BO)**, Polished Chrome **(PC)**, Polished Brass**(PB)**, Brushed Nickel**(BN)**,	$ 288
DDWO-PB	Designer drain waste & overflow kit Available finishes: White **(WH)**, Bone **(BO)**, Polished Chrome **(PC)**, Polished Brass**(PB)**, Brushed Nickel**(BN)**,	$ 288
DDWO-BO	Designer drain waste & overflow kit Available finishes: White **(WH)**, Bone **(BO)**, Polished Chrome **(PC)**, Polished Brass**(PB)**, Brushed Nickel**(BN)**,	$ 288
DDWO-WH		$ 288
DDWO-BN		$ 288
30UPLT	Extra reinforcement for after market accessories installment. Order per wall Reinforcement is applied 30 inches and up **ONLY**,	$ 63
30UPRT		$ 63
30UPBK		$ 63
FLATLT	Extra reinforcement for after market accessories installment. Order per wall Reinforcement is applied to flat surface areas.	$ 81
FLATRT	Extra reinforcement for after market accessories installment Order per wall Reinforcement is applied to flat surface areas.	$ 81
FLATBK	Extra reinforcement for after market accessories installment. Order per wall Reinforcement is applied to flat surface areas.	$ 81
SC	Ultra strong honeycomb reinforcement for demanding applications that require additional strength	$ 101
35RKBO	Finish repair kit - Case of 12 Available in White **(WH)**, or Bone **(BO)**,	$ 303
35RKWH		$ 303

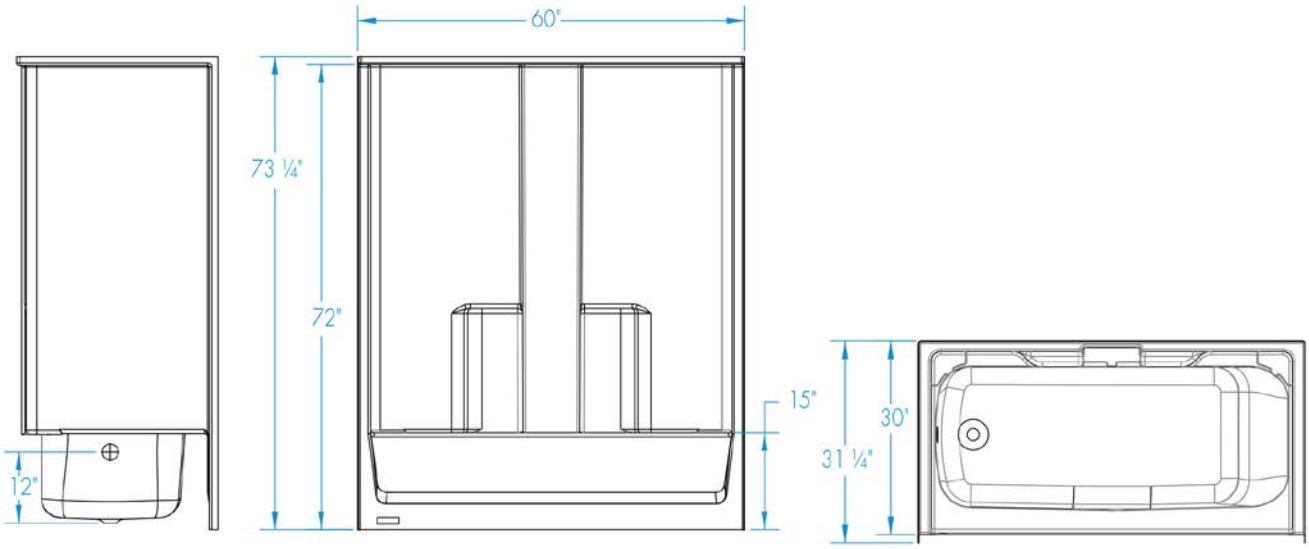
60"
73 ¼"
72"
12"
15"
31 ¼"
30"

2603302P



Material : AcrylX™

Features

- 2-Piece tub shower ideal for remodeling projects
- Smooth wall finish
- Three molded toiletry shelves
- Left or right hand drain
- Slip resistant, textured bottom for safety
- AcrylX™ applied acrylic surface

2603302P - PRICING CATEGORY : ER

SKU	System	Color	Configuration	Dimensions & Weight	MSRP
2603302PL-AL	Soaker - No System	Almond	Left-hand Drain	60” x 30” x 72” / 117 lb 1524mm x 762mm x 1829mm / 53.06 kg	$ 1186
2603302PL-BI		Biscuit			$ 1186
2603302PL-BK		Black			$ 1506
2603302PL-BO		Bone			$ 1186
2603302PL-LN		Linen			$ 1186
2603302PL-ME		Mexican Sand			$ 1506
2603302PL-SD		Sandbar			$ 1506
2603302PL-ST		Sterling Silver			$ 1506
2603302PL-WH		White			$ 1151
2603302PR-AL		Almond	Right-hand Drain		$ 1186
2603302PR-BI		Biscuit			$ 1186
2603302PR-BK		Black			$ 1506
2603302PR-BO		Bone			$ 1186
2603302PR-LN		Linen			$ 1186
2603302PR-ME		Mexican Sand			$ 1506
2603302PR-SD		Sandbar			$ 1506
2603302PR-ST		Sterling Silver			$ 1506
2603302PR-WH		White			$ 1151

OPTIONS

SKU	Description	MSRP
DDWO-PC	Designer drain waste & overflow kit Available finishes: White **(WH)**, Bone **(BO)**, Polished Chrome **(PC)**, Polished Brass**(PB)**, Brushed Nickel**(BN)**,	$ 288
DDWO-PB	Designer drain waste & overflow kit Available finishes: White **(WH)**, Bone **(BO)**, Polished Chrome **(PC)**, Polished Brass**(PB)**, Brushed Nickel**(BN)**,	$ 288
DDWO-BO	Designer drain waste & overflow kit Available finishes: White **(WH)**, Bone **(BO)**, Polished Chrome **(PC)**, Polished Brass**(PB)**, Brushed Nickel**(BN)**,	$ 288
DDWO-WH		$ 288
DDWO-BN		$ 288
30UPLT	Extra reinforcement for after market accessories installment. Order per wall Reinforcement is applied 30 inches and up **ONLY**,	$ 63
30UPRT		$ 63
30UPBK		$ 63
FLATLT	Extra reinforcement for after market accessories installment. Order per wall Reinforcement is applied to flat surface areas.	$ 81
FLATRT	Extra reinforcement for after market accessories installment Order per wall Reinforcement is applied to flat surface areas.	$ 81
FLATBK	Extra reinforcement for after market accessories installment. Order per wall Reinforcement is applied to flat surface areas.	$ 81
SC	Ultra strong honeycomb reinforcement for demanding applications that require additional strength	$ 101
35RKBO	Finish repair kit - Case of 12 Available in White **(WH)**, or Bone **(BO)**,	$ 303
35RKWH		$ 303

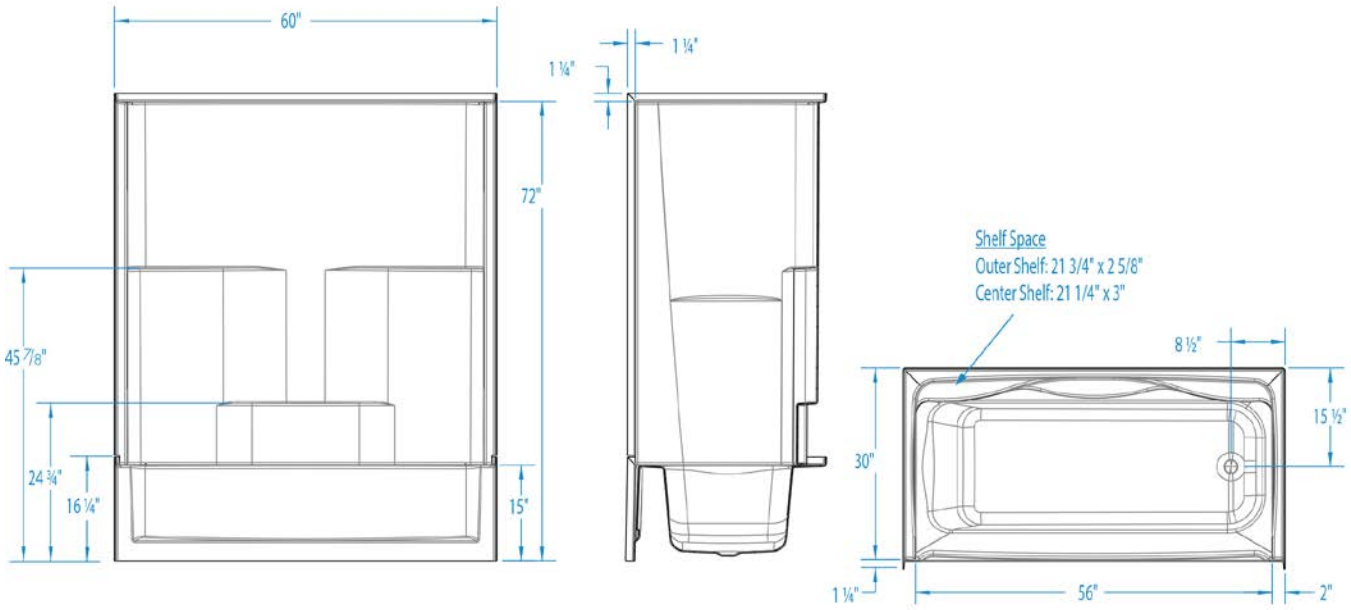
60"
1 ¼"
1 ¼"
72"
45 7/8"
24 ¾"
16 ¼"
15"
Shelf Space
Outer Shelf: 21 3/4" x 2 5/8"
Center Shelf: 21 1/4" x 3"
8 ½"
15 ½"
30"
1 ¼"
56"
2"

260330M AFR

Material : AcrylX™

Features

- 1-Piece tub shower
- Smooth wall finish
- Molded toiletry shelves
- Ergonomic backrest for bathing comfort
- This AFR unit accommodates the installation of drain, waste and overflow above the floor
- Left or right hand drain
- Slip resistant ,textured floor for safety
- AcrylX™ applied acrylic surface

260330M AFR - PRICING CATEGORY : EF

SKU	System	Color	Configuration	Dimensions & Weight	MSRP
260330ML-AL	Soaker - No System	Almond	Left-hand Drain	60” x 30” x 74” / 126 lb 1524mm x 762mm x 1880mm / 57.14 kg	$ 1361
260330ML-BI		Biscuit			$ 1361
260330ML-BK		Black			$ 1681
260330ML-BO		Bone			$ 1361
260330ML-LN		Linen			$ 1361
260330ML-ME		Mexican Sand			$ 1681
260330ML-SD		Sandbar			$ 1681
260330ML-ST		Sterling Silver			$ 1681
260330ML-WH		White			$ 1326
260330MR-AL		Almond	Right-hand Drain		$ 1361
260330MR-BI		Biscuit			$ 1361
260330MR-BK		Black			$ 1681
260330MR-BO		Bone			$ 1361
260330MR-LN		Linen			$ 1361
260330MR-ME		Mexican Sand			$ 1681
260330MR-SD		Sandbar			$ 1681
260330MR-ST		Sterling Silver			$ 1681
260330MR-WH		White			$ 1326

OPTIONS

SKU	Description	MSRP
DDWO-PC	Designer drain waste & overflow kit Available finishes: White **(WH)**, Bone **(BO)**, Polished Chrome **(PC)**, Polished Brass**(PB)**, Brushed Nickel**(BN)**,	$ 288
DDWO-PB	Designer drain waste & overflow kit Available finishes: White **(WH)**, Bone **(BO)**, Polished Chrome **(PC)**, Polished Brass**(PB)**, Brushed Nickel**(BN)**,	$ 288
DDWO-BO	Designer drain waste & overflow kit Available finishes: White **(WH)**, Bone **(BO)**, Polished Chrome **(PC)**, Polished Brass**(PB)**, Brushed Nickel**(BN)**,	$ 288
DDWO-WH		$ 288
DDWO-BN		$ 288
30UPLT	Extra reinforcement for after market accessories installment. Order per wall Reinforcement is applied 30 inches and up **ONLY**,	$ 63
30UPRT		$ 63
30UPBK		$ 63
FLATLT	Extra reinforcement for after market accessories installment. Order per wall Reinforcement is applied to flat surface areas.	$ 81
FLATRT	Extra reinforcement for after market accessories installment Order per wall Reinforcement is applied to flat surface areas.	$ 81
FLATBK	Extra reinforcement for after market accessories installment. Order per wall Reinforcement is applied to flat surface areas.	$ 81
SC	Ultra strong honeycomb reinforcement for demanding applications that require additional strength	$ 101
35RKBO	Finish repair kit - Case of 12 Available in White **(WH)**, or Bone **(BO)**,	$ 303
35RKWH		$ 303

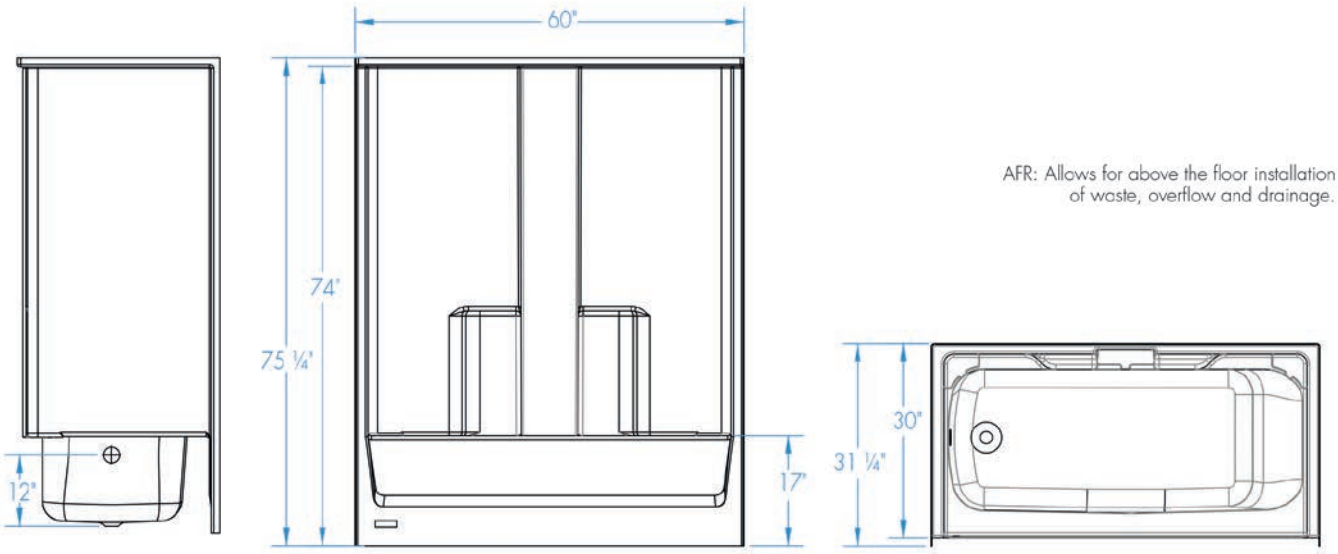

AFR: Allows for above the floor installation of waste, overflow and drainage.

260330S





Material : AcrylX™

Features

- 1 Piece tub shower
- Smooth wall finish
- Three molded toiletry shelves
- Left or right hand drain
- Slip-resistant textured floor for safety
- AcrylX™ applied acrylic surface

260330S - PRICING CATEGORY : EF

SKU	System	Color	Configuration	Dimensions & Weight	MSRP
260330SL-AL	Soaker - No System	Almond	Left-hand Drain	60” x 30” x 72” / 117 lb 1524mm x 762mm x 1829mm / 53.06 kg	$ 1220
260330SL-BI		Biscuit			$ 1220
260330SL-BK		Black			$ 1540
260330SL-BO		Bone			$ 1220
260330SL-LN		Linen			$ 1220
260330SL-ME		Mexican Sand			$ 1540
260330SL-SD		Sandbar			$ 1540
260330SL-ST		Sterling Silver			$ 1540
260330SL-WH		White			$ 1185
260330SR-AL		Almond	Right-hand Drain		$ 1220
260330SR-BI		Biscuit			$ 1220
260330SR-BK		Black			$ 1540
260330SR-BO		Bone			$ 1220
260330SR-LN		Linen			$ 1220
260330SR-ME		Mexican Sand			$ 1540
260330SR-SD		Sandbar			$ 1540
260330SR-ST		Sterling Silver			$ 1540
260330SR-WH		White			$ 1185

OPTIONS

SKU	Description	MSRP
DDWO-PC	Designer drain waste & overflow kit Available finishes: White **(WH)**, Bone **(BO)**, Polished Chrome **(PC)**, Polished Brass**(PB)**, Brushed Nickel**(BN)**,	$ 288
DDWO-PB	Designer drain waste & overflow kit Available finishes: White **(WH)**, Bone **(BO)**, Polished Chrome **(PC)**, Polished Brass**(PB)**, Brushed Nickel**(BN)**,	$ 288
DDWO-BO	Designer drain waste & overflow kit Available finishes: White **(WH)**, Bone **(BO)**, Polished Chrome **(PC)**, Polished Brass**(PB)**, Brushed Nickel**(BN)**,	$ 288
DDWO-WH		$ 288
DDWO-BN		$ 288
SC	Ultra strong honeycomb reinforcement for demanding applications that require additional strength	$ 101
35RKBO	Finish repair kit - Case of 12 Available in White **(WH)**, or Bone **(BO)**,	$ 303
35RKWH		$ 303

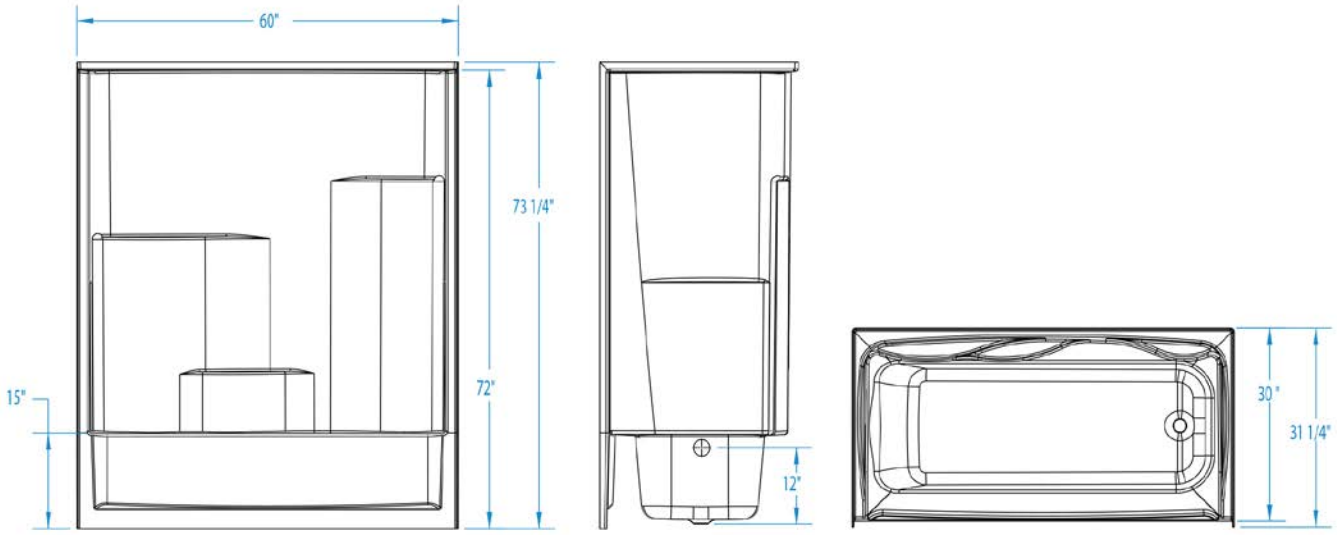
60"
73 1/4"
72"
15"
12"
30"
31 1/4"

260330SM AFR



Material : AcrylX™

Features

- 1 Piece tub shower
- Smooth wall finish
- Three molded toiletry shelves
- This AFR unit accommodates the installation of drain, waste and overflow above the floor
- Left or right hand drain
- Slip-resistant textured floor for safety
- AcrylX™ applied acrylic surface

260330SM AFR - PRICING CATEGORY : EF

SKU	System	Color	Configuration	Dimensions & Weight	MSRP
260330SML-AL	Soaker - No System	Almond	Left-hand Drain	60” x 30” x 75” / 121 lb 1524mm x 762mm x 1905mm / 54.88 kg	$ 1330
260330SML-BI		Biscuit			$ 1330
260330SML-BK		Black			$ 1650
260330SML-BO		Bone			$ 1330
260330SML-LN		Linen			$ 1330
260330SML-ME		Mexican Sand			$ 1650
260330SML-SD		Sandbar			$ 1650
260330SML-ST		Sterling Silver			$ 1650
260330SML-WH		White			$ 1295
260330SMR-AL		Almond	Right-hand Drain		$ 1330
260330SMR-BI		Biscuit			$ 1330
260330SMR-BK		Black			$ 1650
260330SMR-BO		Bone			$ 1330
260330SMR-LN		Linen			$ 1330
260330SMR-ME		Mexican Sand			$ 1650
260330SMR-SD		Sandbar			$ 1650
260330SMR-ST		Sterling Silver			$ 1650
260330SMR-WH		White			$ 1295

OPTIONS

SKU	Description	MSRP
DDWO-PC	Designer drain waste & overflow kit Available finishes: White **(WH)**, Bone **(BO)**, Polished Chrome **(PC)**, Polished Brass**(PB)**, Brushed Nickel**(BN)**,	$ 288
DDWO-PB	Designer drain waste & overflow kit Available finishes: White **(WH)**, Bone **(BO)**, Polished Chrome **(PC)**, Polished Brass**(PB)**, Brushed Nickel**(BN)**,	$ 288
DDWO-BO	Designer drain waste & overflow kit Available finishes: White **(WH)**, Bone **(BO)**, Polished Chrome **(PC)**, Polished Brass**(PB)**, Brushed Nickel**(BN)**,	$ 288
DDWO-WH		$ 288
DDWO-BN		$ 288
SC	Ultra strong honeycomb reinforcement for demanding applications that require additional strength	$ 101
35RKBO	Finish repair kit - Case of 12 Available in White **(WH)**, or Bone **(BO)**,	$ 303
35RKWH		$ 303

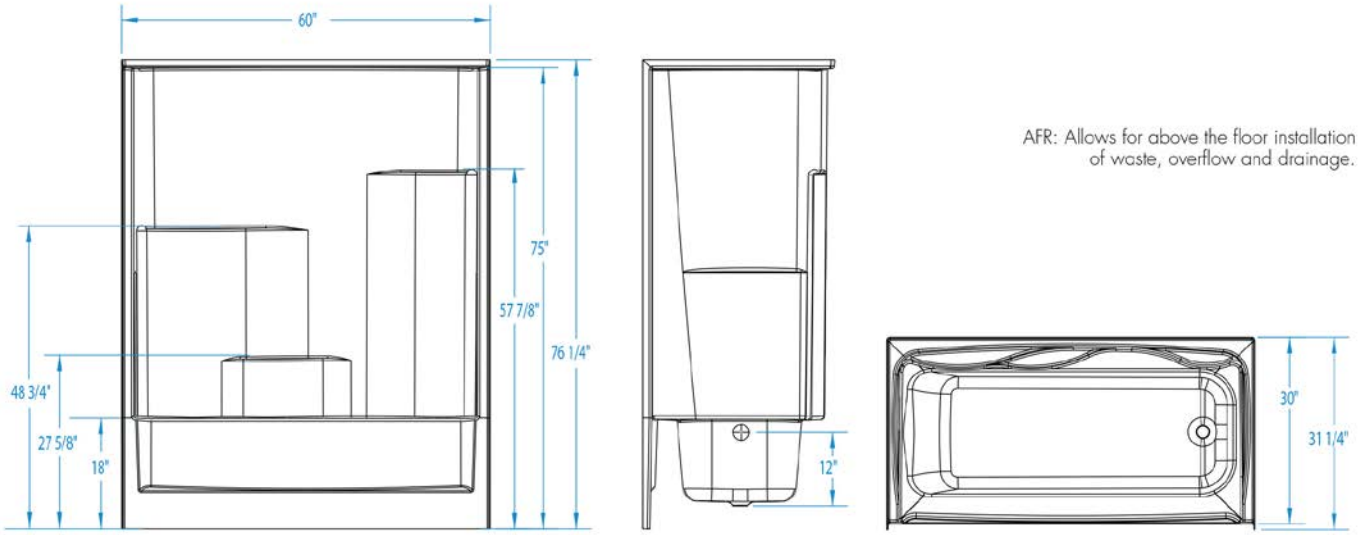

AFR: Allows for above the floor installation of waste, overflow and drainage.

26033CCT



Material : AcrylX™

Features

- 1-Piece tub shower
- Textured square tile wall finish is easy to clean with no messy grout lines
- Molded toiletry shelves
- Ergonomic backrest for bathing comfort
- Center rear drain
- Slip resistant, textured floor for safety
- AcrylX™ applied acrylic surface

26033CCT - PRICING CATEGORY : EF

SKU	System	Color	Configuration	Dimensions & Weight	MSRP
26033CCT-AL	Soaker - No System	Almond	Back Center Drain	60” x 30” x 72” / 127 lb 1524mm x 762mm x 1829mm / 57.6 kg	$ 1382
26033CCT-BI		Biscuit			$ 1382
26033CCT-BK		Black			$ 1702
26033CCT-BO		Bone			$ 1382
26033CCT-LN		Linen			$ 1382
26033CCT-ME		Mexican Sand			$ 1702
26033CCT-SD		Sandbar			$ 1702
26033CCT-ST		Sterling Silver			$ 1702
26033CCT-WH		White			$ 1347

OPTIONS

SKU	Description	MSRP
DDWO-PC	Designer drain waste & overflow kit Available finishes: White **(WH)**, Bone **(BO)**, Polished Chrome **(PC)**, Polished Brass**(PB)**, Brushed Nickel**(BN)**,	$ 288
DDWO-PB	Designer drain waste & overflow kit Available finishes: White **(WH)**, Bone **(BO)**, Polished Chrome **(PC)**, Polished Brass**(PB)**, Brushed Nickel**(BN)**,	$ 288
DDWO-BO	Designer drain waste & overflow kit Available finishes: White **(WH)**, Bone **(BO)**, Polished Chrome **(PC)**, Polished Brass**(PB)**, Brushed Nickel**(BN)**,	$ 288
DDWO-WH		$ 288
DDWO-BN		$ 288
30UPLT	Extra reinforcement for after market accessories installment. Order per wall Reinforcement is applied 30 inches and up **ONLY**,	$ 63

OPTIONS

SKU	Description	MSRP
30UPRT	Extra reinforcement for after market accessories installment. Order per wall Reinforcement is applied 30 inches and up **ONLY**,	$ 63
30UPBK		$ 63
FLATLT	Extra reinforcement for after market accessories installment. Order per wall Reinforcement is applied to flat surface areas.	$ 81
FLATRT	Extra reinforcement for after market accessories installment Order per wall Reinforcement is applied to flat surface areas.	$ 81
FLATBK	Extra reinforcement for after market accessories installment. Order per wall Reinforcement is applied to flat surface areas.	$ 81
SC	Ultra strong honeycomb reinforcement for demanding applications that require additional strength	$ 101
35RKBO	Finish repair kit - Case of 12 Available in White **(WH)**, or Bone **(BO)**,	$ 303
35RKWH		$ 303

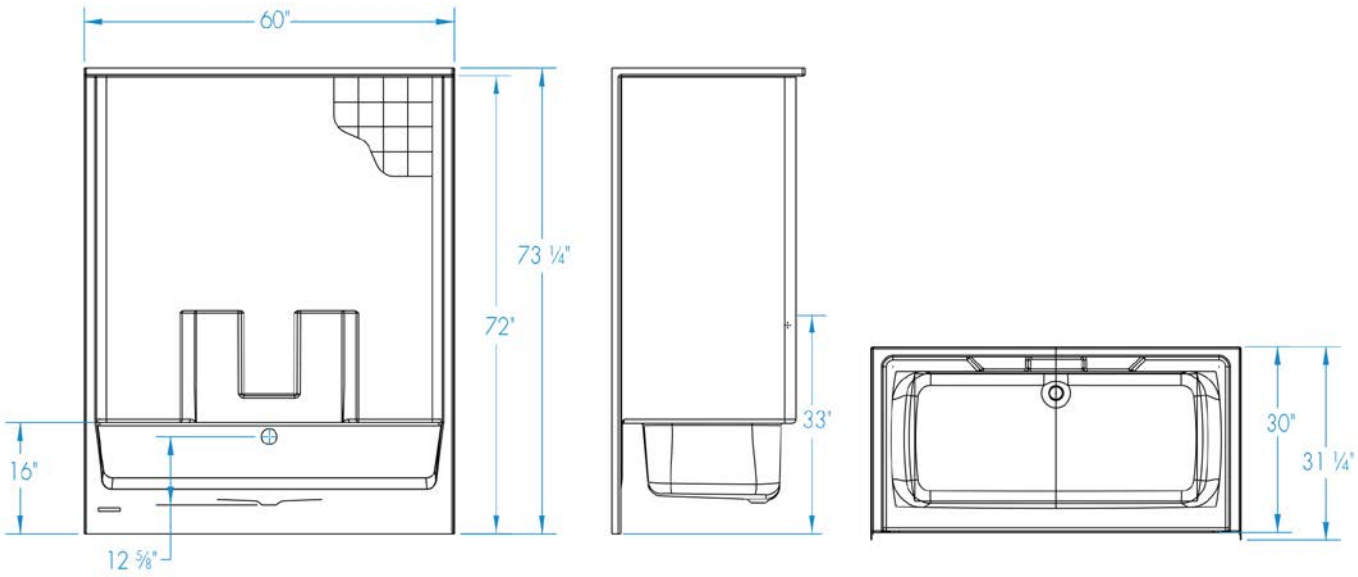
60"
73 ¼"
72'
16"
12 ⅝"
33'
30"
31 ¼"

26033CCTM AFR



Material : AcrylX™

Features

- 1-Piece tub shower
- Textured square tile wall finish is easy to clean with no messy grout lines
- Molded toiletry shelves
- Ergonomic backrest for bathing comfort
- This AFR unit accomodates the installation of drain, waste and overflow above the floor
- Center rear drain
- Slip resistant, textured floor for safety
- AcrylX™ applied acrylic surface

26033CCTM AFR - PRICING CATEGORY : EF

SKU	System	Color	Configuration	Dimensions & Weight	MSRP
26033CCTM-AL	Soaker - No System	Almond	Center Drain	60” x 30” x 74” / 123 lb 1524mm x 762mm x 1880mm / 55.78 kg	$ 1382
26033CCTM-BI		Biscuit			$ 1382
26033CCTM-BK		Black			$ 1702
26033CCTM-BO		Bone			$ 1382
26033CCTM-LN		Linen			$ 1382
26033CCTM-ME		Mexican Sand			$ 1702
26033CCTM-SD		Sandbar			$ 1702
26033CCTM-ST		Sterling Silver			$ 1702
26033CCTM-WH		White			$ 1347

OPTIONS

SKU	Description	MSRP
DDWO-PC	Designer drain waste & overflow kit Available finishes: White **(WH)**, Bone **(BO)**, Polished Chrome **(PC)**, Polished Brass**(PB)**, Brushed Nickel**(BN)**,	$ 288
DDWO-PB	Designer drain waste & overflow kit Available finishes: White **(WH)**, Bone **(BO)**, Polished Chrome **(PC)**, Polished Brass**(PB)**, Brushed Nickel**(BN)**,	$ 288
DDWO-BO	Designer drain waste & overflow kit Available finishes: White **(WH)**, Bone **(BO)**, Polished Chrome **(PC)**, Polished Brass**(PB)**, Brushed Nickel**(BN)**,	$ 288
DDWO-WH		$ 288
DDWO-BN		$ 288
30UPLT	Extra reinforcement for after market accessories installment. Order per wall Reinforcement is applied 30 inches and up **ONLY**,	$ 63

OPTIONS

SKU	Description	MSRP
30UPRT	Extra reinforcement for after market accessories installment. Order per wall Reinforcement is applied 30 inches and up **ONLY**,	$ 63
30UPBK		$ 63
FLATLT	Extra reinforcement for after market accessories installment. Order per wall Reinforcement is applied to flat surface areas.	$ 81
FLATRT	Extra reinforcement for after market accessories installment Order per wall Reinforcement is applied to flat surface areas.	$ 81
FLATBK	Extra reinforcement for after market accessories installment. Order per wall Reinforcement is applied to flat surface areas.	$ 81
SC	Ultra strong honeycomb reinforcement for demanding applications that require additional strength	$ 101
35RKBO	Finish repair kit - Case of 12 Available in White **(WH)**, or Bone **(BO)**,	$ 303
35RKWH		$ 303

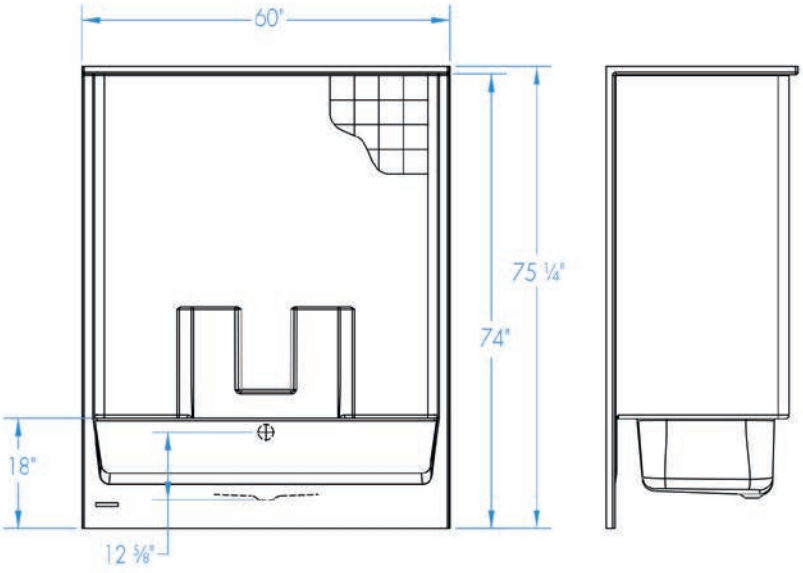

AFR: Allows for above the floor installation of waste, overflow and drainage.

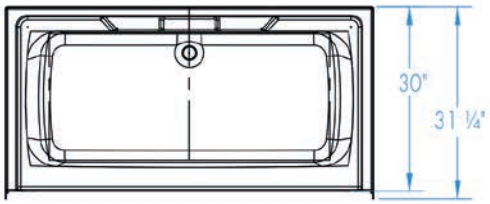

26033CT



Material : AcrylX™

Features

- 1-Piece tub shower
- Textured square tile wall finish is easy to clean with no messy grout lines
- Molded toiletry shelves
- Ergonomic backrest for bathing comfort
- Left or right hand drain
- Slip resistant, textured floor for safety
- AcrylX™ applied acrylic surface

26033CT - PRICING CATEGORY : EF

SKU	System	Color	Configuration	Dimensions & Weight	MSRP
26033CTL-AL	Soaker - No System	Almond	Left-hand Drain	60” x 30” x 72” / 123 lb 1524mm x 762mm x 1829mm / 55.78 kg	$ 1237
26033CTL-BI		Biscuit			$ 1237
26033CTL-BK		Black			$ 1557
26033CTL-BO		Bone			$ 1237
26033CTL-LN		Linen			$ 1237
26033CTL-ME		Mexican Sand			$ 1557
26033CTL-SD		Sandbar			$ 1557
26033CTL-ST		Sterling Silver			$ 1557
26033CTL-WH		White			$ 1202
26033CTR-AL		Almond	Right-hand Drain		$ 1237
26033CTR-BI		Biscuit			$ 1237
26033CTR-BK		Black			$ 1557
26033CTR-BO		Bone			$ 1237
26033CTR-LN		Linen			$ 1237
26033CTR-ME		Mexican Sand			$ 1557
26033CTR-SD		Sandbar			$ 1557
26033CTR-ST		Sterling Silver			$ 1557
26033CTR-WH		White			$ 1202

OPTIONS

SKU	Description	MSRP
DDWO-PC	Designer drain waste & overflow kit Available finishes: White **(WH)**, Bone **(BO)**, Polished Chrome **(PC)**, Polished Brass**(PB)**, Brushed Nickel**(BN)**,	$ 288
DDWO-PB	Designer drain waste & overflow kit Available finishes: White **(WH)**, Bone **(BO)**, Polished Chrome **(PC)**, Polished Brass**(PB)**, Brushed Nickel**(BN)**,	$ 288
DDWO-BO	Designer drain waste & overflow kit Available finishes: White **(WH)**, Bone **(BO)**, Polished Chrome **(PC)**, Polished Brass**(PB)**, Brushed Nickel**(BN)**,	$ 288
DDWO-WH		$ 288
DDWO-BN		$ 288
30UPLT	Extra reinforcement for after market accessories installment. Order per wall Reinforcement is applied 30 inches and up **ONLY**,	$ 63
30UPRT		$ 63
30UPBK		$ 63
FLATLT	Extra reinforcement for after market accessories installment. Order per wall Reinforcement is applied to flat surface areas.	$ 81
FLATRT	Extra reinforcement for after market accessories installment Order per wall Reinforcement is applied to flat surface areas.	$ 81
FLATBK	Extra reinforcement for after market accessories installment. Order per wall Reinforcement is applied to flat surface areas.	$ 81
SC	Ultra strong honeycomb reinforcement for demanding applications that require additional strength	$ 101
35RKBO	Finish repair kit - Case of 12 Available in White **(WH)**, or Bone **(BO)**,	$ 303
35RKWH		$ 303

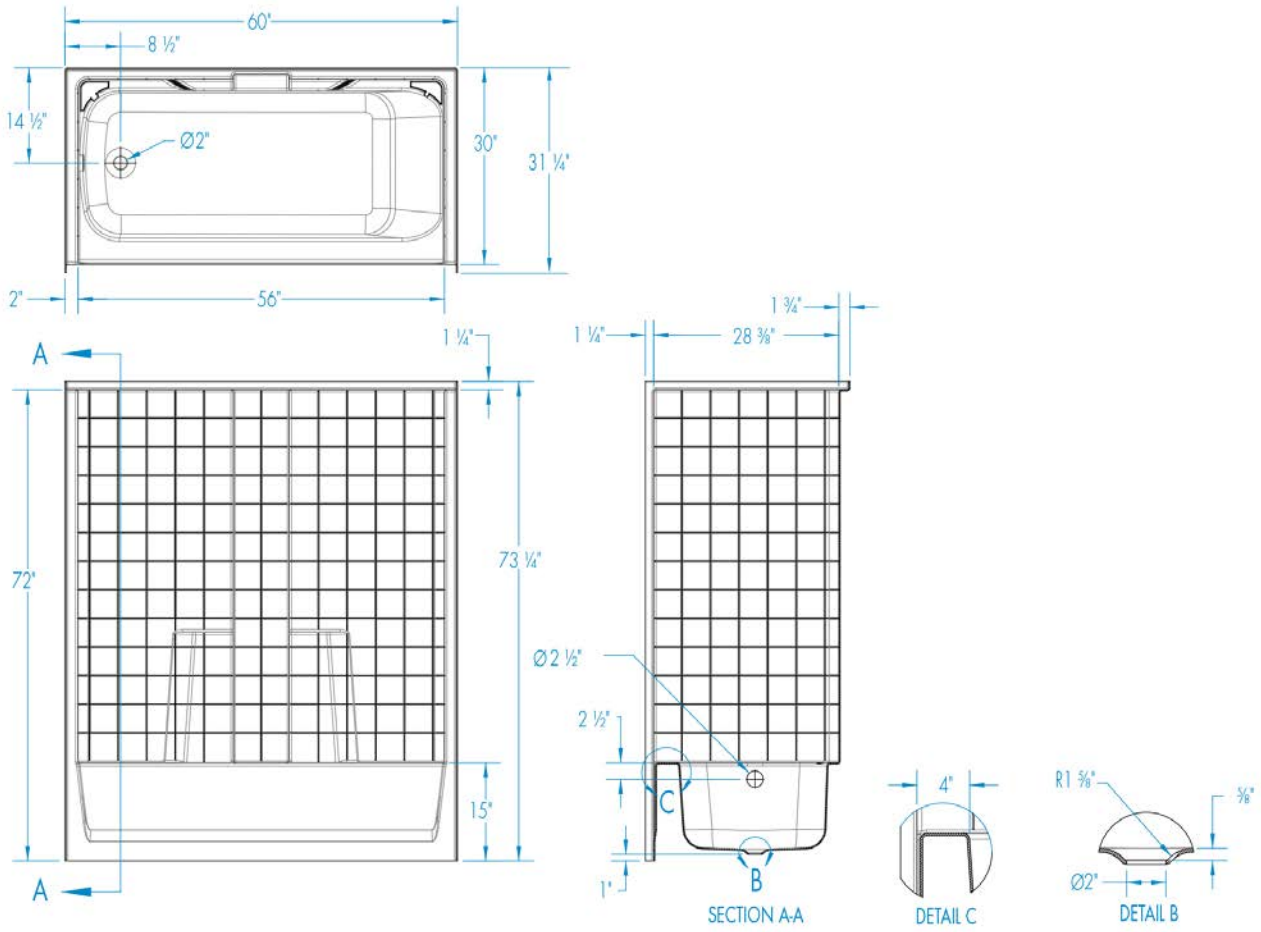
60"
8 ½"
14 ½"
Ø2"
30"
31 ¼"
2"
56"
A
1 ¼"
72"
73 ¼"
15"
A
1 ¾"
1 ¼"
28 ⅜"
Ø2 ½"
2 ½"
C
B
1"
SECTION A-A
4"
DETAIL C
R1 ⅝"
⅜"
Ø2"
DETAIL B

26033CTM AFR



Material : AcrylX™

Features

- 1-Piece tub shower
- Textured square tile wall finish is easy to clean with no messy grout lines
- Molded toiletry shelves
- Ergonomic backrest for bathing comfort
- This AFR unit accommodates the installation of drain, waste and overflow above the floor
- Left or right hand drain
- Slip resistant, textured floor for safety
- AcrylX™ applied acrylic surface

26033CTM AFR - PRICING CATEGORY : EF

SKU	System	Color	Configuration	Dimensions & Weight	MSRP
26033CTML-AL	Soaker - No System	Almond	Left-hand Drain	60” x 30” x 75” / 125 lb 1524mm x 762mm x 1905mm / 56.69 kg	$ 1376
26033CTML-BI		Biscuit			$ 1376
26033CTML-BK		Black			$ 1696
26033CTML-BO		Bone			$ 1376
26033CTML-LN		Linen			$ 1376
26033CTML-ME		Mexican Sand			$ 1696
26033CTML-SD		Sandbar			$ 1696
26033CTML-ST		Sterling Silver			$ 1696
26033CTML-WH		White			$ 1341
26033CTMR-AL		Almond	Right-hand Drain		$ 1376
26033CTMR-BI		Biscuit			$ 1376
26033CTMR-BK		Black			$ 1696
26033CTMR-BO		Bone			$ 1376
26033CTMR-LN		Linen			$ 1376
26033CTMR-ME		Mexican Sand			$ 1696
26033CTMR-SD		Sandbar			$ 1696
26033CTMR-ST		Sterling Silver			$ 1696
26033CTMR-WH		White			$ 1341

OPTIONS

SKU	Description	MSRP
DDWO-PC	Designer drain waste & overflow kit Available finishes: White **(WH)**, Bone **(BO)**, Polished Chrome **(PC)**, Polished Brass**(PB)**, Brushed Nickel**(BN)**,	$ 288
DDWO-PB	Designer drain waste & overflow kit Available finishes: White **(WH)**, Bone **(BO)**, Polished Chrome **(PC)**, Polished Brass**(PB)**, Brushed Nickel**(BN)**,	$ 288
DDWO-BO	Designer drain waste & overflow kit Available finishes: White **(WH)**, Bone **(BO)**, Polished Chrome **(PC)**, Polished Brass**(PB)**, Brushed Nickel**(BN)**,	$ 288
DDWO-WH		$ 288
DDWO-BN		$ 288
30UPLT	Extra reinforcement for after market accessories installment. Order per wall Reinforcement is applied 30 inches and up **ONLY**,	$ 63
30UPRT		$ 63
30UPBK		$ 63
FLATLT	Extra reinforcement for after market accessories installment. Order per wall Reinforcement is applied to flat surface areas.	$ 81
FLATRT	Extra reinforcement for after market accessories installment Order per wall Reinforcement is applied to flat surface areas.	$ 81
FLATBK	Extra reinforcement for after market accessories installment. Order per wall Reinforcement is applied to flat surface areas.	$ 81
SC	Ultra strong honeycomb reinforcement for demanding applications that require additional strength	$ 101
35RKBO	Finish repair kit - Case of 12 Available in White **(WH)**, or Bone **(BO)**,	$ 303
35RKWH		$ 303

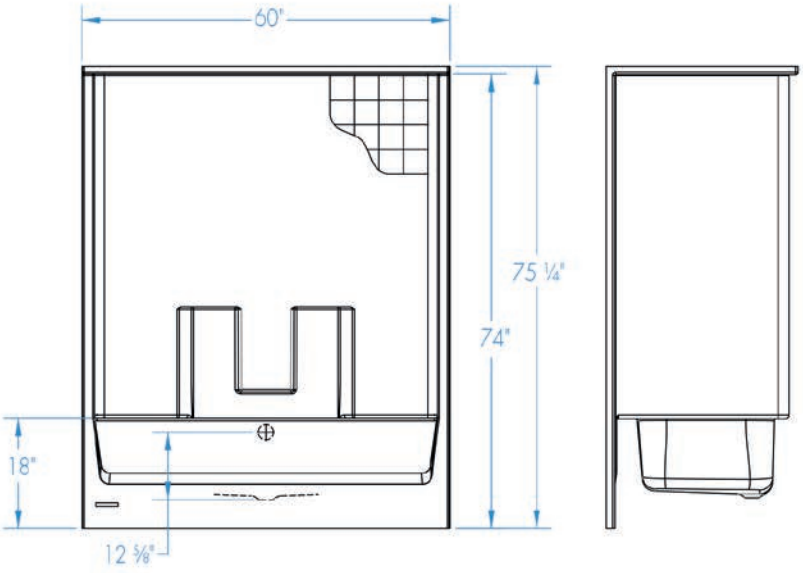

AFR: Allows for above the floor installation of waste, overflow and drainage.

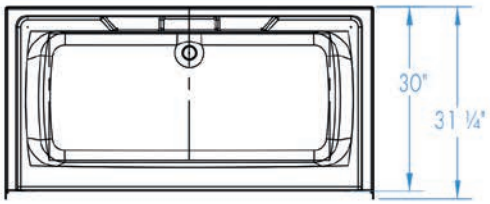

2603BSTM AFR



Material : AcrylX™

Min: 47 Gal
Max: 49 Gal

Features

- 1-Piece tub shower
- Smooth square tile wall finish is easy to clean with no messy grout lines
- Bowed front skirt creates a larger bathing basin
- Molded toiletry shelves
- Ergonomic backrest for bathing comfort
- This AFR unit accommodates the installation of drain, waste and overflow above the floor
- Right or left hand drain
- Slip resistant, textured floor for safety
- ArmorCore™ reinforced bottom< for extra strength/ li>
- AcrylX™ applied acrylic surface
- Whirlpool Features:
- Whirlpool pump
- 6 directional hydrotherapy jets
- Color matched trim
- Available in White and Biscuit/Linen only
- Pneumatic on/off control
- Advanced safety suction

2603BSTM AFR - PRICING CATEGORY : EH

SKU	System	Color	Configuration	Dimensions & Weight	MSRP
2603BSTML-AL	Soaker - No System	Almond	Left-hand Drain	60” x 36” x 79” / 154 lb 1524mm x 914mm x 2007mm / 69.84 kg	$ 1796
2603BSTML-BI		Biscuit			$ 1796
2603BSTML-BK		Black			$ 2116
2603BSTML-BO		Bone			$ 1796
2603BSTML-LN		Linen			$ 1796
2603BSTML-ME		Mexican Sand			$ 2116
2603BSTML-SD		Sandbar			$ 2116
2603BSTML-ST		Sterling Silver			$ 2116
2603BSTML-WH		White			$ 1761
2603BSTMLWP-BI	Whirlpool Massage	Biscuit			$ 4200
2603BSTMLWP-LN		Linen			$ 4200
2603BSTMLWP-WH		White			$ 4165

2603BSTM AFR - PRICING CATEGORY : EH

SKU	System	Color	Configuration	Dimensions & Weight	MSRP
2603BSTMR-AL	Soaker - No System	Almond	Right-hand Drain	60” x 36” x 79” / 154 lb 1524mm x 914mm x 2007mm / 69.84 kg	$ 1796
2603BSTMR-BI		Biscuit			$ 1796
2603BSTMR-BK		Black			$ 2116
2603BSTMR-BO		Bone			$ 1796
2603BSTMR-LN		Linen			$ 1796
2603BSTMR-ME		Mexican Sand			$ 2116
2603BSTMR-SD		Sandbar			$ 2116
2603BSTMR-ST		Sterling Silver			$ 2116
2603BSTMR-WH		White			$ 1761
2603BSTMRWP-BI	Whirlpool Massage	Biscuit			$ 4200
2603BSTMRWP-LN		Linen			$ 4200
2603BSTMRWP-WH		White			$ 4165

OPTIONS

SKU	Description	MSRP
30UPLT	Extra reinforcement for after market accessories installment. Order per wall Reinforcement is applied 30 inches and up **ONLY**,	$ 63
30UPRT	Extra reinforcement for after market accessories installment. Order per wall Reinforcement is applied 30 inches and up **ONLY**,	$ 63
30UPBK	Extra reinforcement for after market accessories installment. Order per wall Reinforcement is applied 30 inches and up **ONLY**,	$ 63
FLATLT	Extra reinforcement for after market accessories installment. Order per wall Reinforcement is applied to flat surface areas.	$ 81
FLATRT	Extra reinforcement for after market accessories installment Order per wall Reinforcement is applied to flat surface areas.	$ 81
FLATBK	Extra reinforcement for after market accessories installment. Order per wall Reinforcement is applied to flat surface areas.	$ 81
SC	Ultra strong honeycomb reinforcement for demanding applications that require additional strength	$ 101
35RKBO	Finish repair kit - Case of 12 Available in White **(WH)**, or Bone **(BO)**,	$ 303
35RKWH		$ 303

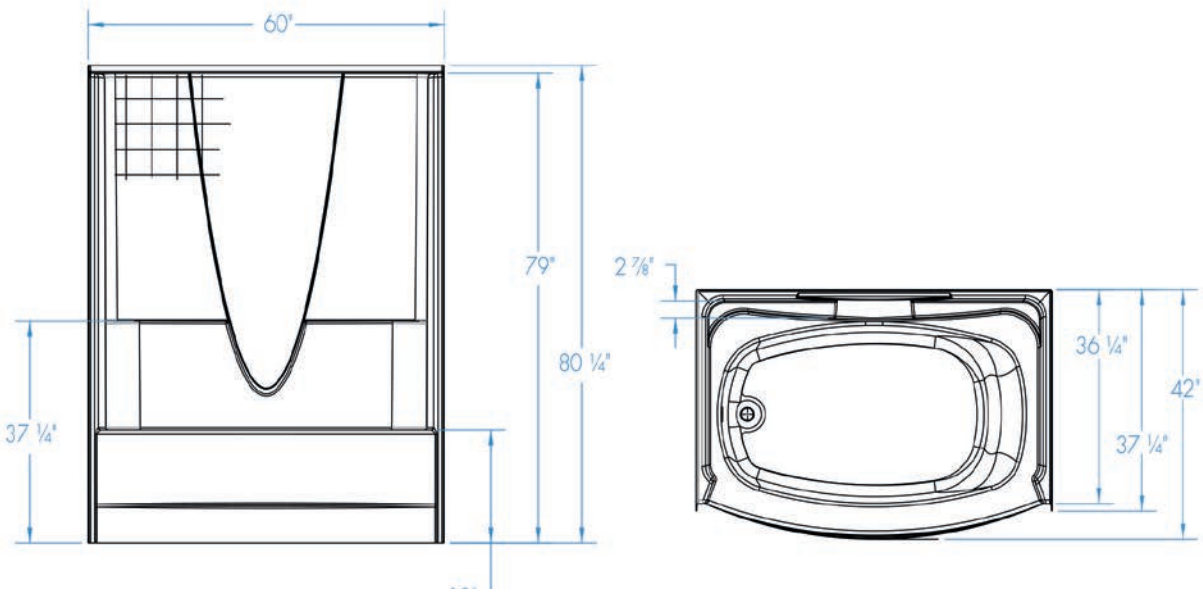
60"
79"
80 ¼"
37 ¼"
2 ⅞"
36 ¼"
42"
37 ¼"

2603CT





Material : AcrylX™

Features

- 1-Piece tub-shower
- Smooth square tile wall finish is easy to clean with no messy grout lines
- Molded toiletry shelves
- Ergonomic back rest for bathing comfort
- Left or right hand drain
- Slip resistant, textured floor for safety
- AcrylX™ applied acrylic surface

2603CT - PRICING CATEGORY : EF

SKU	System	Color	Configuration	Dimensions & Weight	MSRP
2603CTL-AL	Soaker - No System	Almond	Left-hand Drain	60” x 32” x 72” / 125 lb 1524mm x 813mm x 1829mm / 56.69 kg	$ 1292
2603CTL-BI		Biscuit			$ 1292
2603CTL-BK		Black			$ 1612
2603CTL-BO		Bone			$ 1292
2603CTL-LN		Linen			$ 1292
2603CTL-ME		Mexican Sand			$ 1612
2603CTL-SD		Sandbar			$ 1612
2603CTL-ST		Sterling Silver			$ 1612
2603CTL-WH		White			$ 1257
2603CTR-AL		Almond	Right-hand Drain		$ 1292
2603CTR-BI		Biscuit			$ 1292
2603CTR-BK		Black			$ 1612
2603CTR-BO		Bone			$ 1292
2603CTR-LN		Linen			$ 1292
2603CTR-ME		Mexican Sand			$ 1612
2603CTR-SD		Sandbar			$ 1612
2603CTR-ST		Sterling Silver			$ 1612
2603CTR-WH		White			$ 1257

OPTIONS

SKU	Description	MSRP
DDWO-PC	Designer drain waste & overflow kit Available finishes: White **(WH)**, Bone **(BO)**, Polished Chrome **(PC)**, Polished Brass**(PB)**, Brushed Nickel**(BN)**,	$ 288
DDWO-PB	Designer drain waste & overflow kit Available finishes: White **(WH)**, Bone **(BO)**, Polished Chrome **(PC)**, Polished Brass**(PB)**, Brushed Nickel**(BN)**,	$ 288
DDWO-BO	Designer drain waste & overflow kit Available finishes: White **(WH)**, Bone **(BO)**, Polished Chrome **(PC)**, Polished Brass**(PB)**, Brushed Nickel**(BN)**,	$ 288
DDWO-WH		$ 288
DDWO-BN		$ 288
30UPLT	Extra reinforcement for after market accessories installment. Order per wall Reinforcement is applied 30 inches and up **ONLY**,	$ 63
30UPRT		$ 63
30UPBK		$ 63
FLATLT	Extra reinforcement for after market accessories installment. Order per wall Reinforcement is applied to flat surface areas.	$ 81
FLATRT	Extra reinforcement for after market accessories installment Order per wall Reinforcement is applied to flat surface areas.	$ 81
FLATBK	Extra reinforcement for after market accessories installment. Order per wall Reinforcement is applied to flat surface areas.	$ 81
SC	Ultra strong honeycomb reinforcement for demanding applications that require additional strength	$ 101
35RKBO	Finish repair kit - Case of 12 Available in White **(WH)**, or Bone **(BO)**,	$ 303
35RKWH		$ 303

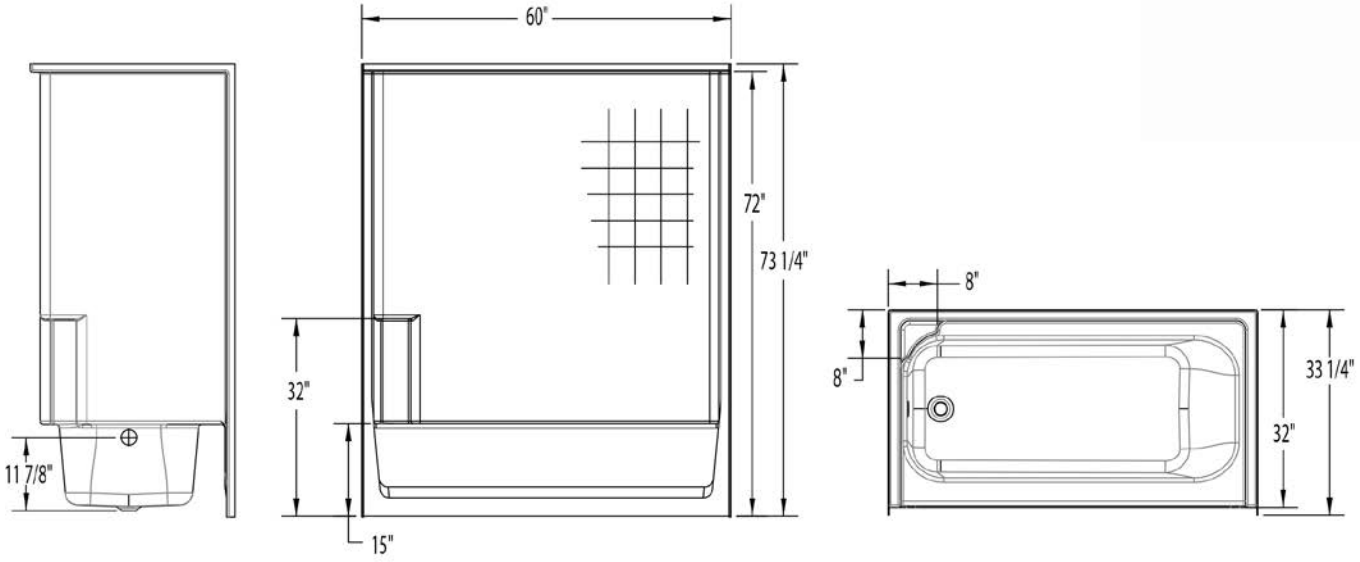
60"
72"
73 1/4"
32"
15"
11 7/8"
8"
8"
33 1/4"
32"

2603CTM AFR





Material : AcrylX™

Features

- 1-Piece tub shower
- Smooth square tile wall finish is easy to clean with no messy grout lines
- Molded toiletry shelves
- Ergonomic backrest for bathing comfort
- Left or right hand drain
- This AFR unit accommodates the installation of drain, waste and overflow above the floor
- Slip resistant, textured floor for safety
- AcrylX™ applied acrylic surface

2603CTM AFR - PRICING CATEGORY : EF

SKU	System	Color	Configuration	Dimensions & Weight	MSRP
2603CTML-AL	Soaker - No System	Almond	Left-hand Drain	60” x 32” x 76” / 128 lb 1524mm x 813mm x 1930mm / 58.05 kg	$ 1451
2603CTML-BI		Biscuit			$ 1451
2603CTML-BK		Black			$ 1771
2603CTML-BO		Bone			$ 1451
2603CTML-LN		Linen			$ 1451
2603CTML-ME		Mexican Sand			$ 1771
2603CTML-SD		Sandbar			$ 1771
2603CTML-ST		Sterling Silver			$ 1771
2603CTML-WH		White			$ 1416
2603CTMR-AL		Almond	Right-hand Drain		$ 1451
2603CTMR-BI		Biscuit			$ 1451
2603CTMR-BK		Black			$ 1771
2603CTMR-BO		Bone			$ 1451
2603CTMR-LN		Linen			$ 1451
2603CTMR-ME		Mexican Sand			$ 1771
2603CTMR-SD		Sandbar			$ 1771
2603CTMR-ST		Sterling Silver			$ 1771
2603CTMR-WH		White			$ 1416

OPTIONS

SKU	Description	MSRP
DDWO-PC	Designer drain waste & overflow kit Available finishes: White **(WH)**, Bone **(BO)**, Polished Chrome **(PC)**, Polished Brass**(PB)**, Brushed Nickel**(BN)**,	$ 288
DDWO-PB	Designer drain waste & overflow kit Available finishes: White **(WH)**, Bone **(BO)**, Polished Chrome **(PC)**, Polished Brass**(PB)**, Brushed Nickel**(BN)**,	$ 288
DDWO-BO	Designer drain waste & overflow kit Available finishes: White **(WH)**, Bone **(BO)**, Polished Chrome **(PC)**, Polished Brass**(PB)**, Brushed Nickel**(BN)**,	$ 288
DDWO-WH		$ 288
DDWO-BN		$ 288
30UPLT	Extra reinforcement for after market accessories installment. Order per wall Reinforcement is applied 30 inches and up **ONLY**,	$ 63
30UPRT		$ 63
30UPBK		$ 63
FLATLT	Extra reinforcement for after market accessories installment. Order per wall Reinforcement is applied to flat surface areas.	$ 81
FLATRT	Extra reinforcement for after market accessories installment Order per wall Reinforcement is applied to flat surface areas.	$ 81
FLATBK	Extra reinforcement for after market accessories installment. Order per wall Reinforcement is applied to flat surface areas.	$ 81
SC	Ultra strong honeycomb reinforcement for demanding applications that require additional strength	$ 101
35RKBO	Finish repair kit - Case of 12 Available in White **(WH)**, or Bone **(BO)**,	$ 303
35RKWH		$ 303

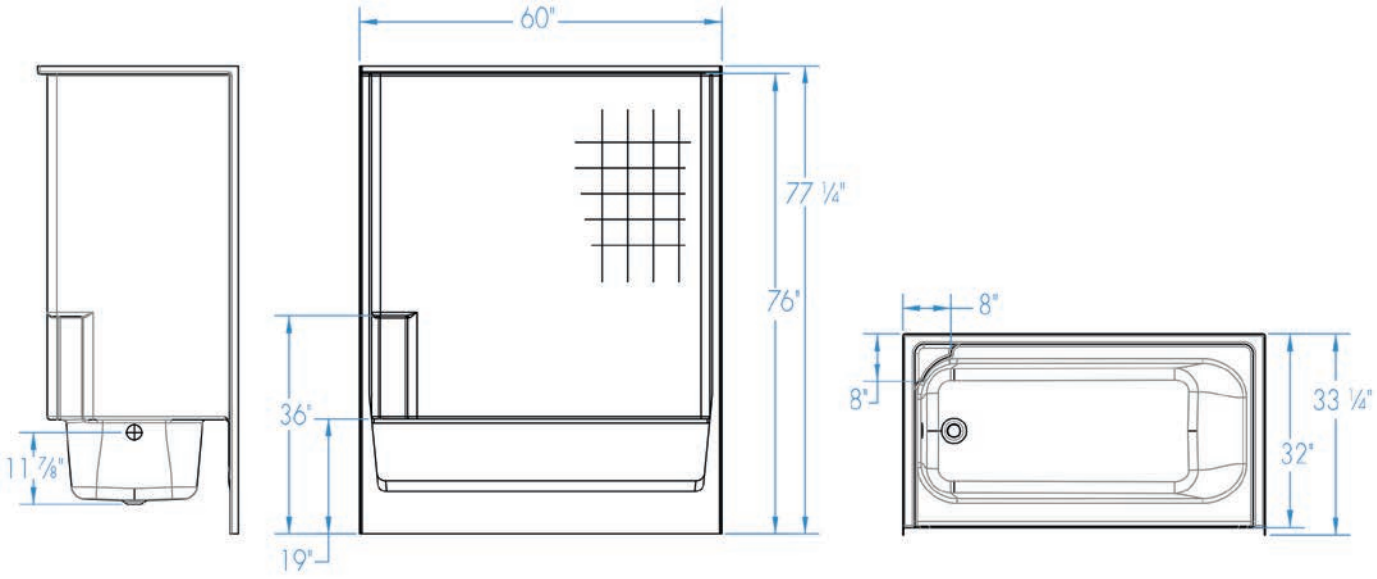
60"
77 ¼"
76"
36"
19"
11 7⁄8"
8"
8"
33 ¼"
32"

2603CTS



Material : AcrylX™

Features

- 1-Piece tub shower
- Textured square tile wall finish is easy to clean with no messy grout lines
- Molded toiletry shelves
- Oval bathing well
- Left or right hand drain
- Slip resistant, textured floor for safety
- AcrylX™ applied acrylic surface

2603CTS - PRICING CATEGORY : EF

SKU	System	Color	Configuration	Dimensions & Weight	MSRP
2603CTSL-AL	Soaker - No System	Almond	Left-hand Drain	60” x 41” x 72” / 145 lb 1524mm x 1041mm x 1829mm / 65.76 kg	$ 1644
2603CTSL-BI		Biscuit			$ 1644
2603CTSL-BK		Black			$ 1964
2603CTSL-BO		Bone			$ 1644
2603CTSL-LN		Linen			$ 1644
2603CTSL-ME		Mexican Sand			$ 1964
2603CTSL-SD		Sandbar			$ 1964
2603CTSL-ST		Sterling Silver			$ 1964
2603CTSL-WH		White			$ 1609
2603CTSR-AL		Almond	Right-hand Drain		$ 1644
2603CTSR-BI		Biscuit			$ 1644
2603CTSR-BK		Black			$ 1964
2603CTSR-BO		Bone			$ 1644
2603CTSR-LN		Linen			$ 1644
2603CTSR-ME		Mexican Sand			$ 1964
2603CTSR-SD		Sandbar			$ 1964
2603CTSR-ST		Sterling Silver			$ 1964
2603CTSR-WH		White			$ 1609

OPTIONS

SKU	Description	MSRP
DDWO-PC	Designer drain waste & overflow kit Available finishes: White **(WH)**, Bone **(BO)**, Polished Chrome **(PC)**, Polished Brass**(PB)**, Brushed Nickel**(BN)**,	$ 288
DDWO-PB	Designer drain waste & overflow kit Available finishes: White **(WH)**, Bone **(BO)**, Polished Chrome **(PC)**, Polished Brass**(PB)**, Brushed Nickel**(BN)**,	$ 288
DDWO-BO	Designer drain waste & overflow kit Available finishes: White **(WH)**, Bone **(BO)**, Polished Chrome **(PC)**, Polished Brass**(PB)**, Brushed Nickel**(BN)**,	$ 288
DDWO-WH		$ 288
DDWO-BN		$ 288
30UPLT	Extra reinforcement for after market accessories installment. Order per wall Reinforcement is applied 30 inches and up **ONLY**,	$ 63
30UPRT		$ 63
30UPBK		$ 63
FLATLT	Extra reinforcement for after market accessories installment. Order per wall Reinforcement is applied to flat surface areas.	$ 81
FLATRT	Extra reinforcement for after market accessories installment Order per wall Reinforcement is applied to flat surface areas.	$ 81
FLATBK	Extra reinforcement for after market accessories installment. Order per wall Reinforcement is applied to flat surface areas.	$ 81
SC	Ultra strong honeycomb reinforcement for demanding applications that require additional strength	$ 101
35RKBO	Finish repair kit - Case of 12 Available in White **(WH)**, or Bone **(BO)**,	$ 303
35RKWH		$ 303

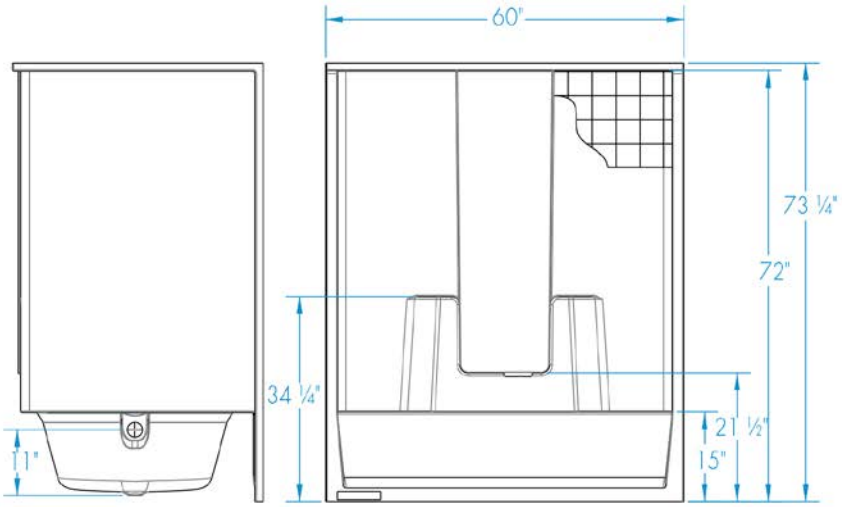
60"
73 ¼"
72"
34 ¼"
21 ½"
15"
1"

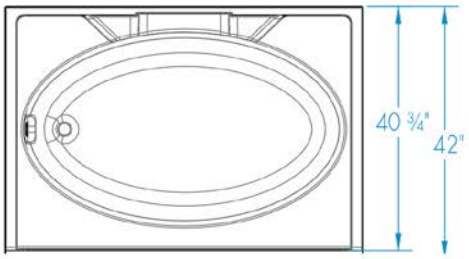
40 ¾"
42"

2603CTSM AFR



Material : AcrylX™

Features

- 1-Piece tub shower
- Textured square tile wall finish is easy to clean with no messy grout lines
- Molded toiletry shelves
- Oval bathing well
- Left or right hand drain
- This AFR unit accommodates the installation of drain, waste and overflow above the floor
- Slip resistant, textured floor for safety
- AcrylX™ applied acrylic surface

2603CTSM AFR - PRICING CATEGORY : EF

SKU	System	Color	Configuration	Dimensions & Weight	MSRP
2603CTSML-AL	Soaker - No System	Almond	Left-hand Drain	60” x 41” x 75” / 149 lb 1524mm x 1041mm x 1905mm / 67.57 kg	$ 1723
2603CTSML-BI		Biscuit			$ 1723
2603CTSML-BK		Black			$ 2043
2603CTSML-BO		Bone			$ 1723
2603CTSML-LN		Linen			$ 1723
2603CTSML-ME		Mexican Sand			$ 2043
2603CTSML-SD		Sandbar			$ 2043
2603CTSML-ST		Sterling Silver			$ 2043
2603CTSML-WH		White			$ 1688
2603CTSMR-AL		Almond	Right-hand Drain		$ 1723
2603CTSMR-BI		Biscuit			$ 1723
2603CTSMR-BK		Black			$ 2043
2603CTSMR-BO		Bone			$ 1723
2603CTSMR-LN		Linen			$ 1723
2603CTSMR-ME		Mexican Sand			$ 2043
2603CTSMR-SD		Sandbar			$ 2043
2603CTSMR-ST		Sterling Silver			$ 2043
2603CTSMR-WH		White			$ 1688

OPTIONS

SKU	Description	MSRP
30UPLT	Extra reinforcement for after market accessories installment. Order per wall Reinforcement is applied 30 inches and up **ONLY**,	$ 63
30UPRT	Extra reinforcement for after market accessories installment. Order per wall Reinforcement is applied 30 inches and up **ONLY**,	$ 63
30UPBK	Extra reinforcement for after market accessories installment. Order per wall Reinforcement is applied 30 inches and up **ONLY**,	$ 63
FLATLT	Extra reinforcement for after market accessories installment. Order per wall Reinforcement is applied to flat surface areas.	$ 81
FLATRT	Extra reinforcement for after market accessories installment Order per wall Reinforcement is applied to flat surface areas.	$ 81
FLATBK	Extra reinforcement for after market accessories installment. Order per wall Reinforcement is applied to flat surface areas.	$ 81
SC	Ultra strong honeycomb reinforcement for demanding applications that require additional strength	$ 101
35RKBO	Finish repair kit - Case of 12 Available in White **(WH)**, or Bone **(BO)**,	$ 303
35RKWH		$ 303

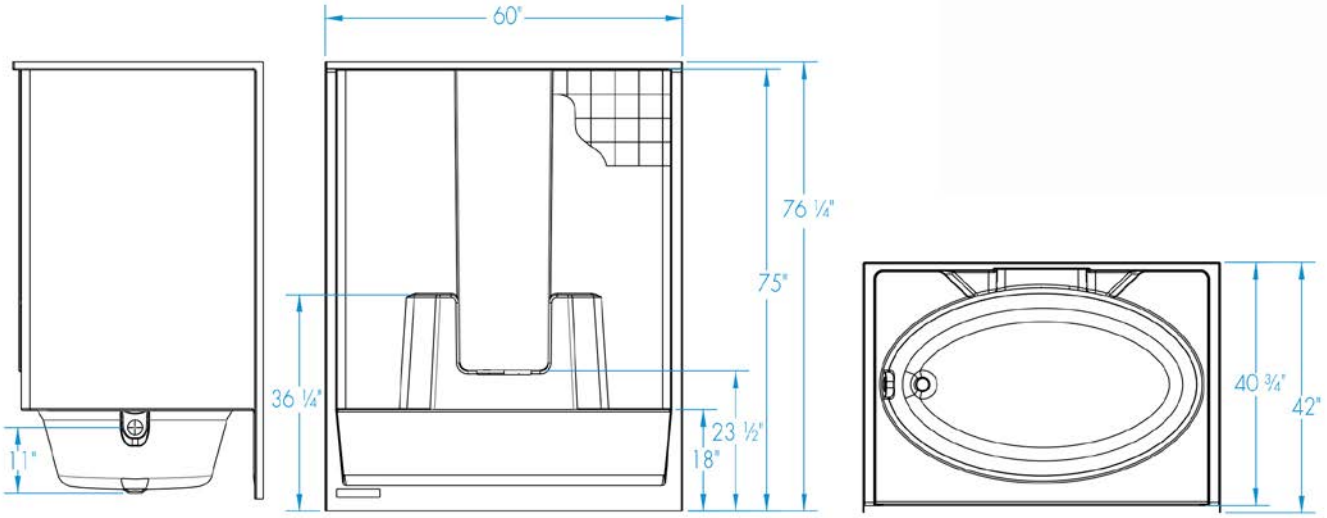
60"
76 ¼"
75"
36 ¼"
23 ½"
18"
1 1"
40 ¾"
42"

2603CTW



Material : AcrylX™

Min: 45 Gal
Max: 50 Gal

Features

- 1-Piece tub shower
- Textured square tile wall finish is easy to clean with no messy grout lines
- Molded toiletry shelves
- Ergonomic backrest for bathing comfort
- Left or right hand drain
- Slip resistant, textured floor for safety
- AcrylX™ applied acrylic surface
- Whirlpool Features:
- Whirlpool pump
- 6 directional hydrotherapy jets
- Color matched trim
- Available in White and Biscuit/Linen only
- Pneumatic on/off control
- Advanced safety suction

2603CTW - PRICING CATEGORY : EH

SKU	System	Color	Configuration	Dimensions & Weight	MSRP
2603CTWL-AL	Soaker - No System	Almond	Left-hand Drain	60” x 32” x 72” / 129 lb 1524mm x 813mm x 1829mm / 58.5 kg	$ 1309
2603CTWL-BI		Biscuit			$ 1309
2603CTWL-BK		Black			$ 1629
2603CTWL-BO		Bone			$ 1309
2603CTWL-LN		Linen			$ 1309
2603CTWL-ME		Mexican Sand			$ 1629
2603CTWL-SD		Sandbar			$ 1629
2603CTWL-ST		Sterling Silver			$ 1629
2603CTWL-WH		White			$ 1274
2603CTWLWP-BI	Whirlpool Massage	Biscuit			$ 4145
2603CTWLWP-LN		Linen			$ 4145
2603CTWLWP-WH		White			$ 4110
2603CTWR-AL	Soaker - No System	Almond	Right-hand Drain		$ 1309
2603CTWR-BI		Biscuit			$ 1309
2603CTWR-BK		Black			$ 1629
2603CTWR-BO		Bone			$ 1309

2603CTW - PRICING CATEGORY : EH

SKU	System	Color	Configuration	Dimensions & Weight	MSRP
2603CTWR-LN	Soaker - No System	Linen	Right-hand Drain	60” x 32” x 72” / 129 lb 1524mm x 813mm x 1829mm / 58.5 kg	$ 1309
2603CTWR-ME		Mexican Sand			$ 1629
2603CTWR-SD		Sandbar			$ 1629
2603CTWR-ST		Sterling Silver			$ 1629
2603CTWR-WH		White			$ 1274
2603CTWRWP-BI	Whirlpool Massage	Biscuit			$ 4145
2603CTWRWP-LN		Linen			$ 4145
2603CTWRWP-WH		White			$ 4110

OPTIONS

SKU	Description	MSRP
DDWO-PC	Designer drain waste & overflow kit Available finishes: White **(WH)**, Bone **(BO)**, Polished Chrome **(PC)**, Polished Brass**(PB)**, Brushed Nickel**(BN)**,	$ 288
DDWO-PB	Designer drain waste & overflow kit Available finishes: White **(WH)**, Bone **(BO)**, Polished Chrome **(PC)**, Polished Brass**(PB)**, Brushed Nickel**(BN)**,	$ 288
DDWO-BO	Designer drain waste & overflow kit Available finishes: White **(WH)**, Bone **(BO)**, Polished Chrome **(PC)**, Polished Brass**(PB)**, Brushed Nickel**(BN)**,	$ 288
DDWO-WH		$ 288
DDWO-BN		$ 288
30UPLT	Extra reinforcement for after market accessories installment. Order per wall Reinforcement is applied 30 inches and up **ONLY**,	$ 63
30UPRT		$ 63
30UPBK		$ 63
FLATLT	Extra reinforcement for after market accessories installment. Order per wall Reinforcement is applied to flat surface areas.	$ 81
FLATRT	Extra reinforcement for after market accessories installment Order per wall Reinforcement is applied to flat surface areas.	$ 81
FLATBK	Extra reinforcement for after market accessories installment. Order per wall Reinforcement is applied to flat surface areas.	$ 81
SC	Ultra strong honeycomb reinforcement for demanding applications that require additional strength	$ 101
35RKBO	Finish repair kit - Case of 12 Available in White **(WH)**, or Bone **(BO)**,	$ 303
35RKWH		$ 303
5715RSP	Convenient access panel Whirlpool option only	$ 240

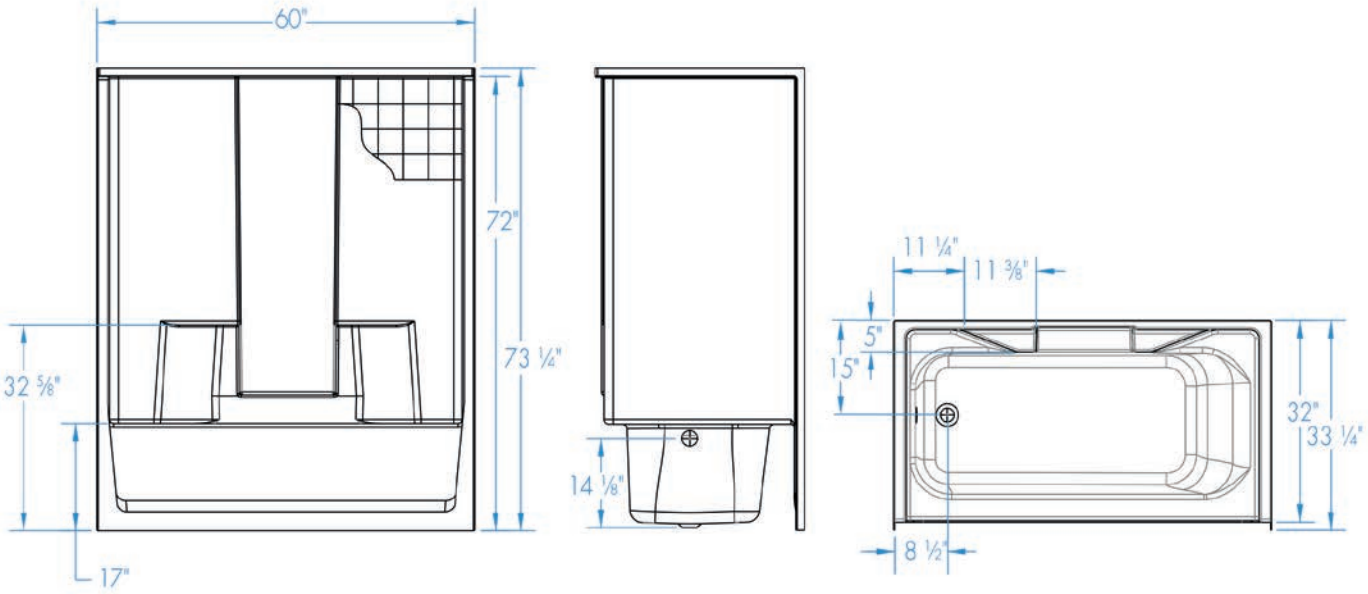
60"
72"
73 ¼"
32 ⅝"
17"
14 ⅛"
11 ¼"
11 ⅜"
5"
15"
32"
33 ¼"
8 ½"

2603CTWM AFR



Material : AcrylX™

Features

- 1-Piece tub shower
- Textured square tile wall finish is easy to clean with no messy grout lines
- Molded toiletry shelves
- Ergonomic backrest for bathing comfort
- This AFR unit accommodates the installation of drain, waste and overflow above the floor
- Left or right hand drain
- Slip resistant, textured floor for safety
- AcrylX™ applied acrylic surface
- Whirlpool Features:
- Whirlpool pump
- 6 directional hydrotherapy jets
- Color matched trim
- Available in White and Biscuit/Linen only
- Pneumatic on/off control
- Advanced safety suction

2603CTWM AFR - PRICING CATEGORY : EH

SKU	System	Color	Configuration	Dimensions & Weight	MSRP
2603CTWML-AL	Soaker - No System	Almond	Left-hand Drain	60” x 32” x 75” / 128 lb 1524mm x 813mm x 1905mm / 58.05 kg	$ 1358
2603CTWML-BI		Biscuit			$ 1358
2603CTWML-BK		Black			$ 1678
2603CTWML-BO		Bone			$ 1358
2603CTWML-LN		Linen			$ 1358
2603CTWML-ME		Mexican Sand			$ 1678
2603CTWML-SD		Sandbar			$ 1678
2603CTWML-ST		Sterling Silver			$ 1678
2603CTWML-WH		White			$ 1323
2603CTWMLWP-BI	Whirlpool Massage	Biscuit			$ 4192
2603CTWMLWP-LN		Linen			$ 4192
2603CTWMLWP-WH		White			$ 4157
2603CTWMR-AL	Soaker - No System	Almond	Right-hand Drain		$ 1358
2603CTWMR-BI		Biscuit			$ 1358
2603CTWMR-BK		Black			$ 1678
2603CTWMR-BO		Bone			$ 1358
2603CTWMR-LN		Linen			$ 1358

2603CTWM AFR - PRICING CATEGORY : EH

SKU	System	Color	Configuration	Dimensions & Weight	MSRP
2603CTWMR-ME	Soaker - No System	Mexican Sand	Right-hand Drain	60” x 32” x 75” / 128 lb 1524mm x 813mm x 1905mm / 58.05 kg	$ 1678
2603CTWMR-SD		Sandbar			$ 1678
2603CTWMR-ST		Sterling Silver			$ 1678
2603CTWMR-WH		White			$ 1323
2603CTWMRWP-BI	Whirlpool Massage	Biscuit			$ 4192
2603CTWMRWP-LN		Linen			$ 4192
2603CTWMRWP-WH		White			$ 4157

OPTIONS

SKU	Description	MSRP
DDWO-PC	Designer drain waste & overflow kit Available finishes: White **(WH)**, Bone **(BO)**, Polished Chrome **(PC)**, Polished Brass**(PB)**, Brushed Nickel**(BN)**,	$ 288
DDWO-PB	Designer drain waste & overflow kit Available finishes: White **(WH)**, Bone **(BO)**, Polished Chrome **(PC)**, Polished Brass**(PB)**, Brushed Nickel**(BN)**,	$ 288
DDWO-BO	Designer drain waste & overflow kit Available finishes: White **(WH)**, Bone **(BO)**, Polished Chrome **(PC)**, Polished Brass**(PB)**, Brushed Nickel**(BN)**,	$ 288
DDWO-WH		$ 288
DDWO-BN		$ 288
30UPLT	Extra reinforcement for after market accessories installment. Order per wall Reinforcement is applied 30 inches and up **ONLY**,	$ 63
30UPRT		$ 63
30UPBK		$ 63
FLATLT	Extra reinforcement for after market accessories installment. Order per wall Reinforcement is applied to flat surface areas.	$ 81
FLATRT	Extra reinforcement for after market accessories installment Order per wall Reinforcement is applied to flat surface areas.	$ 81
FLATBK	Extra reinforcement for after market accessories installment. Order per wall Reinforcement is applied to flat surface areas.	$ 81
SC	Ultra strong honeycomb reinforcement for demanding applications that require additional strength	$ 101
35RKBO	Finish repair kit - Case of 12 Available in White **(WH)**, or Bone **(BO)**,	$ 303
35RKWH		$ 303
5715RSP	Convenient access panel Whirlpool option only	$ 240

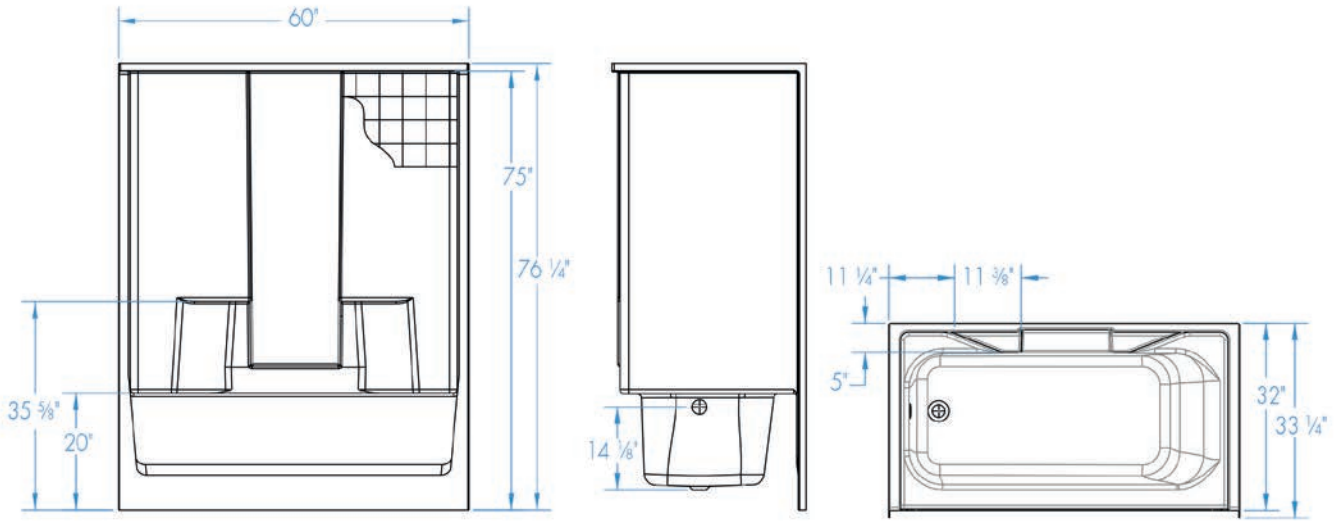
60"
75"
76 ¼"
35 ⅝"
20"
14 ⅛"
11 ¼"
11 ⅜"
5"
32"
33 ¼"

2603DT



Material : AcrylX™

Min: 45 Gal
Max: 50 Gal

Features

- 1-Piece tub shower
- Decorative diagonal tile design is easy to clean
- Molded toiletry shelves
- Ergonomic backrest for bathing comfort
- Left or right hand drain
- Slip resistant, textured floor for safety
- ArmorCore™ reinforced bottom< for extra strength/ li>
- AcrylX™ applied acrylic surface
- Whirlpool Features:
- Whirlpool pump
- 6 directional hydrotherapy jets
- Color matched trim
- Available in White and Biscuit/Linen only
- Pneumatic on/off control
- Advanced safety suction

2603DT - PRICING CATEGORY : EH

SKU	System	Color	Configuration	Dimensions & Weight	MSRP
2603DTL-AL	Soaker - No System	Almond	Left-hand Drain	60” x 32” x 76” / 133 lb 1524mm x 813mm x 1930mm / 60.32 kg	$ 1523
2603DTL-BI		Biscuit			$ 1523
2603DTL-BK		Black			$ 1843
2603DTL-BO		Bone			$ 1523
2603DTL-LN		Linen			$ 1523
2603DTL-ME		Mexican Sand			$ 1843
2603DTL-SD		Sandbar			$ 1843
2603DTL-ST		Sterling Silver			$ 1843
2603DTL-WH		White			$ 1488
2603DTLWP-BI	Whirlpool Massage	Biscuit			$ 4382
2603DTLWP-LN		Linen			$ 4382
2603DTLWP-WH		White			$ 4347
2603DTR-AL	Soaker - No System	Almond	Right-hand Drain		$ 1523
2603DTR-BI		Biscuit			$ 1523
2603DTR-BK		Black			$ 1843

2603DT - PRICING CATEGORY : EH

SKU	System	Color	Configuration	Dimensions & Weight	MSRP
2603DTR-BO	Soaker - No System	Bone	Right-hand Drain	60” x 32” x 76” / 133 lb 1524mm x 813mm x 1930mm / 60.32 kg	$ 1523
2603DTR-LN		Linen			$ 1523
2603DTR-ME		Mexican Sand			$ 1843
2603DTR-SD		Sandbar			$ 1843
2603DTR-ST		Sterling Silver			$ 1843
2603DTR-WH		White			$ 1488
2603DTRWP-BI	Whirlpool Massage	Biscuit			$ 4382
2603DTRWP-LN		Linen			$ 4382
2603DTRWP-WH		White			$ 4347

OPTIONS

SKU	Description	MSRP
DDWO-PC	Designer drain waste & overflow kit Available finishes: White **(WH)**, Bone **(BO)**, Polished Chrome **(PC)**, Polished Brass**(PB)**, Brushed Nickel**(BN)**,	$ 288
DDWO-PB	Designer drain waste & overflow kit Available finishes: White **(WH)**, Bone **(BO)**, Polished Chrome **(PC)**, Polished Brass**(PB)**, Brushed Nickel**(BN)**,	$ 288
DDWO-BO	Designer drain waste & overflow kit Available finishes: White **(WH)**, Bone **(BO)**, Polished Chrome **(PC)**, Polished Brass**(PB)**, Brushed Nickel**(BN)**,	$ 288
DDWO-WH		$ 288
DDWO-BN		$ 288
30UPLT	Extra reinforcement for after market accessories installment. Order per wall Reinforcement is applied 30 inches and up **ONLY**,	$ 63
30UPRT		$ 63
30UPBK		$ 63
FLATLT	Extra reinforcement for after market accessories installment. Order per wall Reinforcement is applied to flat surface areas.	$ 81
FLATRT	Extra reinforcement for after market accessories installment Order per wall Reinforcement is applied to flat surface areas.	$ 81
FLATBK	Extra reinforcement for after market accessories installment. Order per wall Reinforcement is applied to flat surface areas.	$ 81
SC	Ultra strong honeycomb reinforcement for demanding applications that require additional strength	$ 101
35RKBO	Finish repair kit - Case of 12 Available in White **(WH)**, or Bone **(BO)**,	$ 303
35RKWH		$ 303

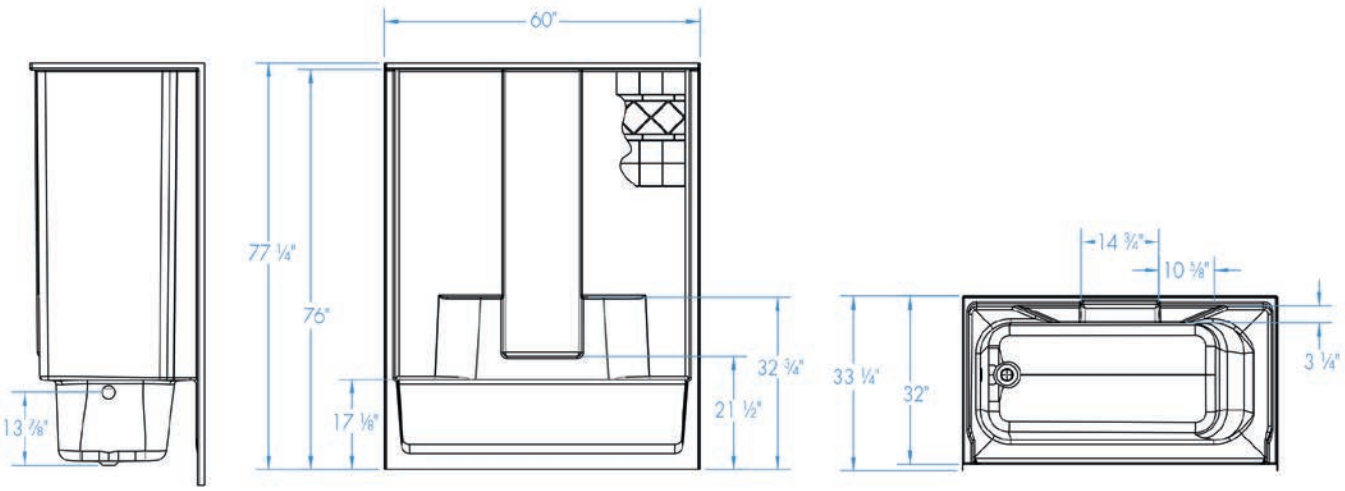
60"
77 ¼"
76"
13 ⅞"
17 ⅛"
32 ¾"
21 ½"
14 ¾"
10 ⅜"
33 ¼"
32"
3 ¼"

2603DTM AFR





Material : AcrylX™

Min: 45 Gal
Max: 50 Gal

Features

- 1-Piece tub shower
- Decorative diagonal tile design is easy to clean
- Molded toiletry shelves
- Ergonomic backrest for bathing comfort
- This AFR unit accommodates the installation of drain, waste and overflow above the floor
- Left or right hand drain
- Slip resistant, textured floor for safety
- ArmorCore™ reinforced bottom< for extra strength/ li>
- AcrylX™ applied acrylic surface
- Whirlpool Features:
- Whirlpool pump
- 6 directional hydrotherapy jets
- Color matched trim
- Available in White and Biscuit/Linen only
- Pneumatic on/off control
- Advanced safety suction

2603DTM AFR - PRICING CATEGORY : EH

SKU	System	Color	Configuration	Dimensions & Weight	MSRP
2603DTML-AL	Soaker - No System	Almond	Left-hand Drain	60” x 32” x 79” / 135 lb 1524mm x 813mm x 2007mm / 61.22 kg	$ 1612
2603DTML-BI		Biscuit			$ 1612
2603DTML-BK		Black			$ 1932
2603DTML-BO		Bone			$ 1612
2603DTML-LN		Linen			$ 1612
2603DTML-ME		Mexican Sand			$ 1932
2603DTML-SD		Sandbar			$ 1932
2603DTML-ST		Sterling Silver			$ 1932
2603DTML-WH		White			$ 1577
2603DTMLWP-BI	Whirlpool Massage	Biscuit			$ 4473
2603DTMLWP-LN		Linen			$ 4473
2603DTMLWP-WH		White			$ 4438
2603DTMR-AL	Soaker - No System	Almond	Right-hand Drain		$ 1612
2603DTMR-BI		Biscuit			$ 1612

2603DTM AFR - PRICING CATEGORY : EH

SKU	System	Color	Configuration	Dimensions & Weight	MSRP
2603DTMR-BK	Soaker - No System	Black	Right-hand Drain	60” x 32” x 79” / 135 lb 1524mm x 813mm x 2007mm / 61.22 kg	$ 1932
2603DTMR-BO		Bone			$ 1612
2603DTMR-LN		Linen			$ 1612
2603DTMR-ME		Mexican Sand			$ 1932
2603DTMR-SD		Sandbar			$ 1932
2603DTMR-ST		Sterling Silver			$ 1932
2603DTMR-WH		White			$ 1577
2603DTMRWP-BI	Whirlpool Massage	Biscuit			$ 4473
2603DTMRWP-LN		Linen			$ 4473
2603DTMRWP-WH		White			$ 4438

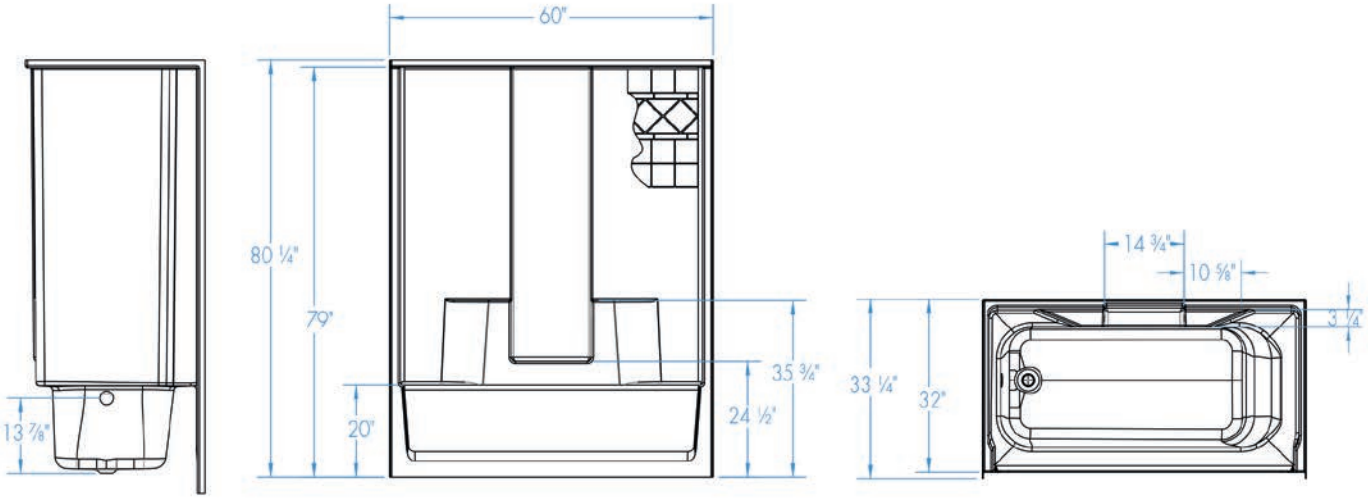
60"
80 ¼"
79"
13 ⅞"
20"
35 ¾"
24 ½"
14 ¾"
10 ⅝"
3 ¼"
33 ¼"
32"

2603OCS



Material : AcrylX™

Features

- 1-Piece tub shower
- Textured square tile wall finish is easy to clean with no messy grout lines
- Molded toiletry shelves
- Oval bathing well
- Left or right hand drain
- Slip resistant, textured floor for safety
- AcrylX™ applied acrylic surface

2603OCS - PRICING CATEGORY : EF

SKU	System	Color	Configuration	Dimensions & Weight	MSRP
2603OCSL-AL	Soaker - No System	Almond	Left-hand Drain	60” x 36” x 72” / 134 lb 1524mm x 914mm x 1829mm / 60.77 kg	$ 1464
2603OCSL-BI		Biscuit			$ 1464
2603OCSL-BK		Black			$ 1784
2603OCSL-BO		Bone			$ 1464
2603OCSL-LN		Linen			$ 1464
2603OCSL-ME		Mexican Sand			$ 1784
2603OCSL-SD		Sandbar			$ 1784
2603OCSL-ST		Sterling Silver			$ 1784
2603OCSL-WH		White			$ 1429
2603OCSR-AL		Almond	Right-hand Drain		$ 1464
2603OCSR-BI		Biscuit			$ 1464
2603OCSR-BK		Black			$ 1784
2603OCSR-BO		Bone			$ 1464
2603OCSR-LN		Linen			$ 1464
2603OCSR-ME		Mexican Sand			$ 1784
2603OCSR-SD		Sandbar			$ 1784
2603OCSR-ST		Sterling Silver			$ 1784
2603OCSR-WH		White			$ 1429

OPTIONS

SKU	Description	MSRP
DDWO-PC	Designer drain waste & overflow kit Available finishes: White **(WH)**, Bone **(BO)**, Polished Chrome **(PC)**, Polished Brass**(PB)**, Brushed Nickel**(BN)**,	$ 288
DDWO-PB	Designer drain waste & overflow kit Available finishes: White **(WH)**, Bone **(BO)**, Polished Chrome **(PC)**, Polished Brass**(PB)**, Brushed Nickel**(BN)**,	$ 288
DDWO-BO	Designer drain waste & overflow kit Available finishes: White **(WH)**, Bone **(BO)**, Polished Chrome **(PC)**, Polished Brass**(PB)**, Brushed Nickel**(BN)**,	$ 288
DDWO-WH		$ 288
DDWO-BN		$ 288
30UPLT	Extra reinforcement for after market accessories installment. Order per wall Reinforcement is applied 30 inches and up **ONLY**,	$ 63
30UPRT		$ 63
30UPBK		$ 63
FLATLT	Extra reinforcement for after market accessories installment. Order per wall Reinforcement is applied to flat surface areas.	$ 81
FLATRT	Extra reinforcement for after market accessories installment Order per wall Reinforcement is applied to flat surface areas.	$ 81
FLATBK	Extra reinforcement for after market accessories installment. Order per wall Reinforcement is applied to flat surface areas.	$ 81
SC	Ultra strong honeycomb reinforcement for demanding applications that require additional strength	$ 101
35RKBO	Finish repair kit - Case of 12 Available in White **(WH)**, or Bone **(BO)**,	$ 303
35RKWH		$ 303

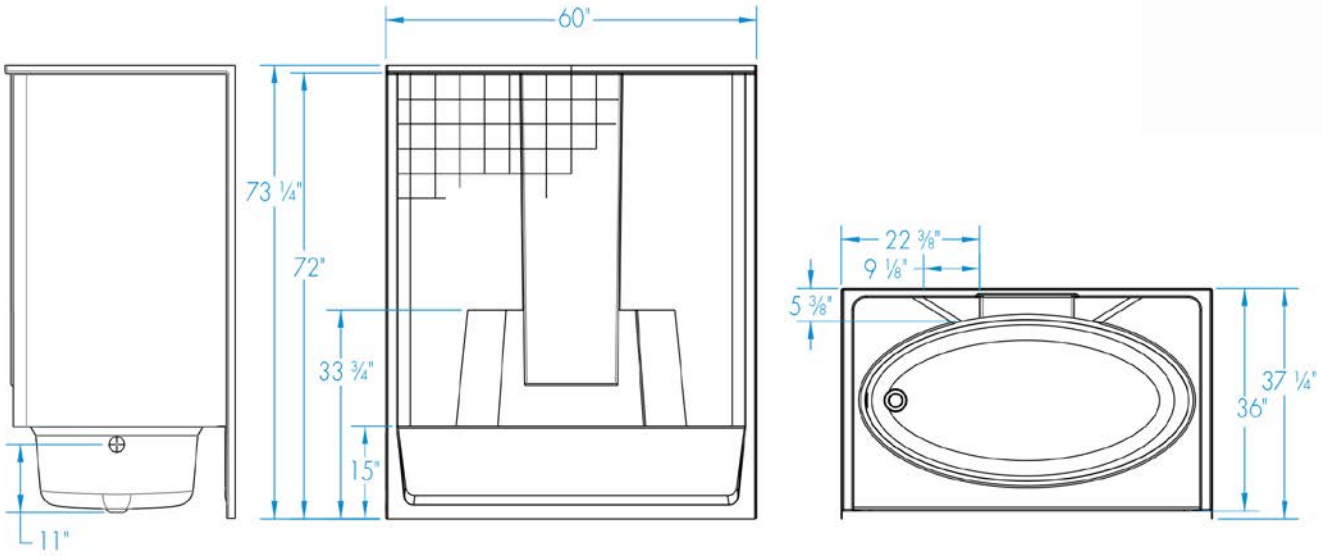
60"
73 ¼"
72"
33 ¾"
15"
11"
22 ⅜"
9 ⅛"
5 ⅜"
37 ¼"
36"

2603OCSM AFR



Material : AcrylX™

Features

- 1-Piece tub shower
- Textured square tile wall finish is easy to clean with no messy grout lines
- Molded toiletry shelves
- Oval bathing well
- Left or right hand drain
- This AFR unit accommodates the installation of drain, waste and overflow above the floor
- Slip resistant, textured floor for safety
- AcrylX™ applied acrylic surfac

2603OCSM AFR - PRICING CATEGORY : EF

SKU	System	Color	Configuration	Dimensions & Weight	MSRP
2603OCSML-AL	Soaker - No System	Almond	Left-hand Drain	60” x 36” x 75” / 136 lb 1524mm x 914mm x 1905mm / 61.68 kg	$ 1675
2603OCSML-BI		Biscuit			$ 1675
2603OCSML-BK		Black			$ 1995
2603OCSML-BO		Bone			$ 1675
2603OCSML-LN		Linen			$ 1675
2603OCSML-ME		Mexican Sand			$ 1995
2603OCSML-SD		Sandbar			$ 1995
2603OCSML-ST		Sterling Silver			$ 1995
2603OCSML-WH		White			$ 1640
2603OCSMR-AL		Almond	Right-hand Drain		$ 1675
2603OCSMR-BI		Biscuit			$ 1675
2603OCSMR-BK		Black			$ 1995
2603OCSMR-BO		Bone			$ 1675
2603OCSMR-LN		Linen			$ 1675
2603OCSMR-ME		Mexican Sand			$ 1995
2603OCSMR-SD		Sandbar			$ 1995
2603OCSMR-ST		Sterling Silver			$ 1995
2603OCSMR-WH		White			$ 1640

OPTIONS

SKU	Description	MSRP
30UPLT	Extra reinforcement for after market accessories installment. Order per wall Reinforcement is applied 30 inches and up **ONLY**,	$ 63
30UPRT	Extra reinforcement for after market accessories installment. Order per wall Reinforcement is applied 30 inches and up **ONLY**,	$ 63
30UPBK	Extra reinforcement for after market accessories installment. Order per wall Reinforcement is applied 30 inches and up **ONLY**,	$ 63
FLATLT	Extra reinforcement for after market accessories installment. Order per wall Reinforcement is applied to flat surface areas.	$ 81
FLATRT	Extra reinforcement for after market accessories installment Order per wall Reinforcement is applied to flat surface areas.	$ 81
FLATBK	Extra reinforcement for after market accessories installment. Order per wall Reinforcement is applied to flat surface areas.	$ 81
SC	Ultra strong honeycomb reinforcement for demanding applications that require additional strength	$ 101
35RKBO	Finish repair kit - Case of 12 Available in White **(WH)**, or Bone **(BO)**,	$ 303
35RKWH		$ 303

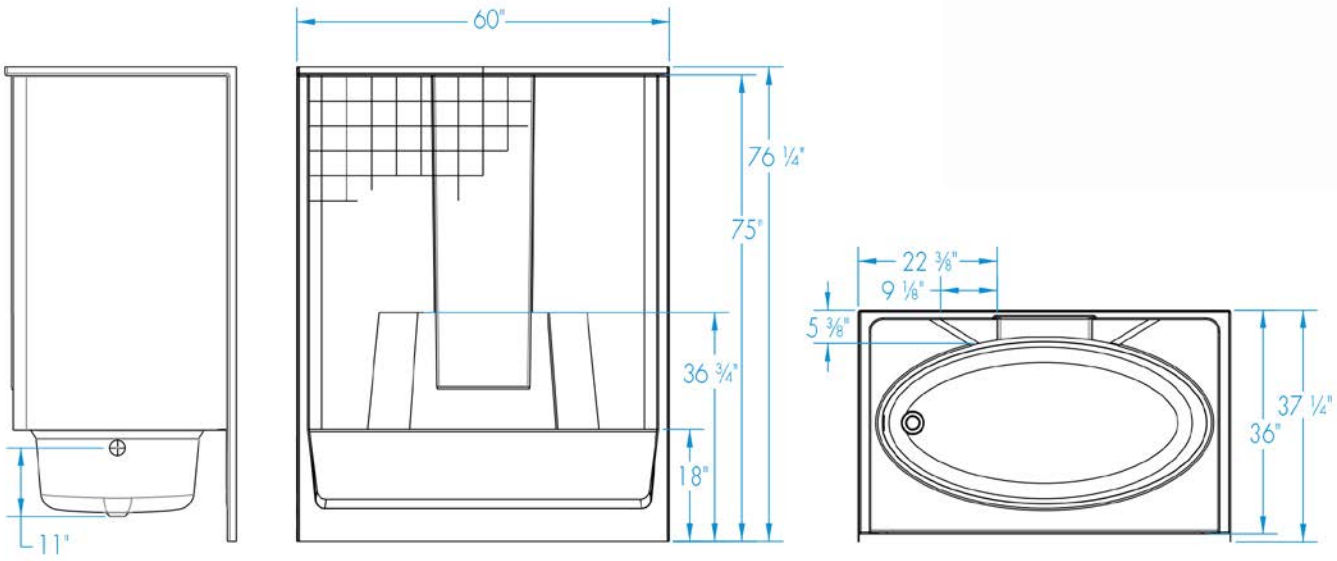
60"
76 ¼"
75"
36 ¾"
18"
11"
22 ⅜"
9 ⅛"
5 ⅜"
37 ¼"
36"

2603SG



Material : AcrylX™

Features

- 1-Piece tub shower
- Classic smooth wall finish is easy to maintain
- Molded toiletry shelves
- Ergonomic backrest for bathing comfort
- Left or right hand drain
- Slip resistant, textured floor for safety
- AcrylX™ applied acrylic surface

2603SG - PRICING CATEGORY : EF

SKU	System	Color	Configuration	Dimensions & Weight	MSRP
2603SGL-AL	Soaker - No System	Almond	Left-hand Drain	60” x 32” x 72” / 134 lb 1524mm x 813mm x 1829mm / 60.77 kg	$ 1288
2603SGL-BI		Biscuit			$ 1288
2603SGL-BK		Black			$ 1608
2603SGL-BO		Bone			$ 1288
2603SGL-LN		Linen			$ 1288
2603SGL-ME		Mexican Sand			$ 1608
2603SGL-SD		Sandbar			$ 1608
2603SGL-ST		Sterling Silver			$ 1608
2603SGL-WH		White			$ 1253
2603SGR-AL		Almond	Right-hand Drain		$ 1288
2603SGR-BI		Biscuit			$ 1288
2603SGR-BK		Black			$ 1608
2603SGR-BO		Bone			$ 1288
2603SGR-LN		Linen			$ 1288
2603SGR-ME		Mexican Sand			$ 1608
2603SGR-SD		Sandbar			$ 1608
2603SGR-ST		Sterling Silver			$ 1608
2603SGR-WH		White			$ 1253

OPTIONS

SKU	Description	MSRP
DDWO-PC	Designer drain waste & overflow kit Available finishes: White **(WH)**, Bone **(BO)**, Polished Chrome **(PC)**, Polished Brass**(PB)**, Brushed Nickel**(BN)**,	$ 288
DDWO-PB	Designer drain waste & overflow kit Available finishes: White **(WH)**, Bone **(BO)**, Polished Chrome **(PC)**, Polished Brass**(PB)**, Brushed Nickel**(BN)**,	$ 288
DDWO-BO	Designer drain waste & overflow kit Available finishes: White **(WH)**, Bone **(BO)**, Polished Chrome **(PC)**, Polished Brass**(PB)**, Brushed Nickel**(BN)**,	$ 288
DDWO-WH		$ 288
DDWO-BN		$ 288
30UPLT	Extra reinforcement for after market accessories installment. Order per wall Reinforcement is applied 30 inches and up **ONLY**,	$ 63
30UPRT		$ 63
30UPBK		$ 63
FLATLT	Extra reinforcement for after market accessories installment. Order per wall Reinforcement is applied to flat surface areas.	$ 81
FLATRT	Extra reinforcement for after market accessories installment Order per wall Reinforcement is applied to flat surface areas.	$ 81
FLATBK	Extra reinforcement for after market accessories installment. Order per wall Reinforcement is applied to flat surface areas.	$ 81
35RKBO	Finish repair kit - Case of 12 Available in White **(WH)**, or Bone **(BO)**,	$ 303
35RKWH		$ 303

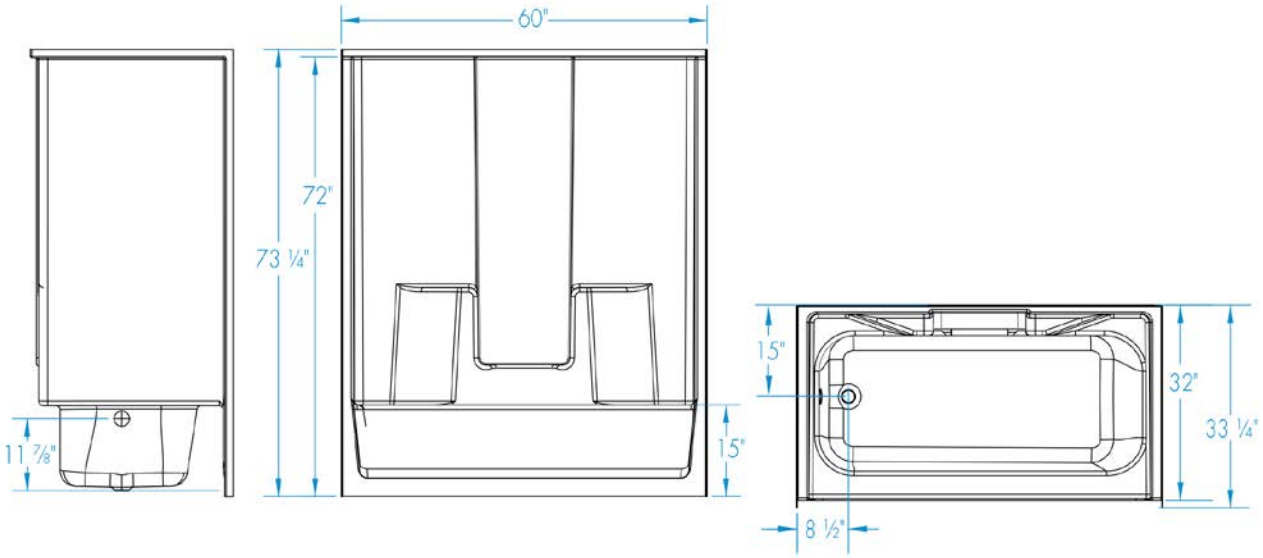
60"
72"
73 ¼"
11 ⅞"
15"
15"
32"
33 ¼"
8 ½"

2603SGM AFR



Material : AcrylX™

Features

- 1-Piece tub shower
- Classic smooth wall finish is easy to maintain
- Molded toiletry shelves
- Ergonomic backrest for bathing comfort
- This AFR unit accommodates the installation of drain, waste and overflow above the floor
- Left or right hand drain
- Slip resistant, textured floor for safety
- AcrylX™ applied acrylic surface

2603SGM AFR - PRICING CATEGORY : EF

SKU	System	Color	Configuration	Dimensions & Weight	MSRP
2603SGML-AL	Soaker - No System	Almond	Left-hand Drain	60” x 32” x 74” / 134 lb 1524mm x 813mm x 1880mm / 60.77 kg	$ 1344
2603SGML-BI		Biscuit			$ 1344
2603SGML-BK		Black			$ 1664
2603SGML-BO		Bone			$ 1344
2603SGML-LN		Linen			$ 1344
2603SGML-ME		Mexican Sand			$ 1664
2603SGML-SD		Sandbar			$ 1664
2603SGML-ST		Sterling Silver			$ 1664
2603SGML-WH		White			$ 1309
2603SGMR-AL		Almond	Right-hand Drain		$ 1344
2603SGMR-BI		Biscuit			$ 1344
2603SGMR-BK		Black			$ 1664
2603SGMR-BO		Bone			$ 1344
2603SGMR-LN		Linen			$ 1344
2603SGMR-ME		Mexican Sand			$ 1664
2603SGMR-SD		Sandbar			$ 1664
2603SGMR-ST		Sterling Silver			$ 1664
2603SGMR-WH		White			$ 1309

OPTIONS

SKU	Description	MSRP
DDWO-PC	Designer drain waste & overflow kit Available finishes: White **(WH)**, Bone **(BO)**, Polished Chrome **(PC)**, Polished Brass**(PB)**, Brushed Nickel**(BN)**,	$ 288
DDWO-PB	Designer drain waste & overflow kit Available finishes: White **(WH)**, Bone **(BO)**, Polished Chrome **(PC)**, Polished Brass**(PB)**, Brushed Nickel**(BN)**,	$ 288
DDWO-BO	Designer drain waste & overflow kit Available finishes: White **(WH)**, Bone **(BO)**, Polished Chrome **(PC)**, Polished Brass**(PB)**, Brushed Nickel**(BN)**,	$ 288
DDWO-WH		$ 288
DDWO-BN		$ 288
30UPLT	Extra reinforcement for after market accessories installment. Order per wall Reinforcement is applied 30 inches and up **ONLY**,	$ 63
30UPRT		$ 63
30UPBK		$ 63
FLATLT	Extra reinforcement for after market accessories installment. Order per wall Reinforcement is applied to flat surface areas.	$ 81
FLATRT	Extra reinforcement for after market accessories installment Order per wall Reinforcement is applied to flat surface areas.	$ 81
FLATBK	Extra reinforcement for after market accessories installment. Order per wall Reinforcement is applied to flat surface areas.	$ 81
35RKBO	Finish repair kit - Case of 12 Available in White **(WH)**, or Bone **(BO)**,	$ 303
35RKWH		$ 303

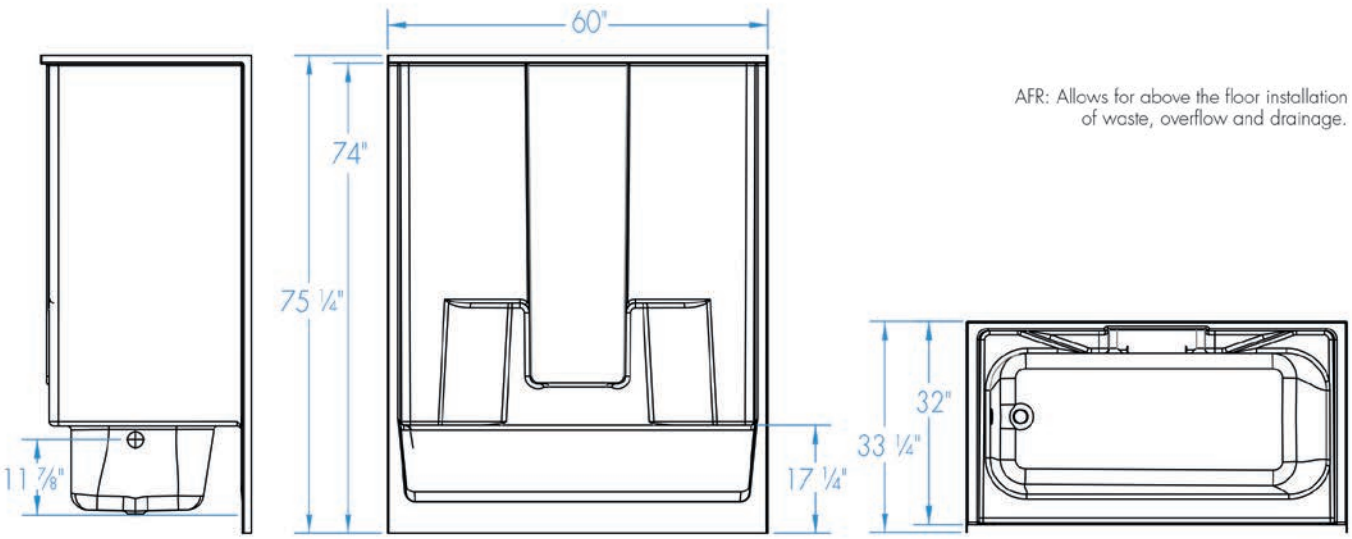

AFR: Allows for above the floor installation of waste, overflow and drainage.

2603SGT





Material : AcrylX™

Features

- 1-Piece tub shower
- Classic smooth wall finish is easy to maintain
- Molded toiletry shelves
- Ergonomic backrest for bathing comfort
- Left or right hand drain
- Slip resistant, textured floor for safety
- AcrylX™ applied acrylic surface

2603SGT - PRICING CATEGORY : EF

SKU	System	Color	Configuration	Dimensions & Weight	MSRP
2603SGTL-AL	Soaker - No System	Almond	Left-hand Drain	60” x 32” x 78” / 135 lb 1524mm x 813mm x 1981mm / 61.22 kg	$ 1430
2603SGTL-BI		Biscuit			$ 1430
2603SGTL-BK		Black			$ 1750
2603SGTL-BO		Bone			$ 1430
2603SGTL-LN		Linen			$ 1430
2603SGTL-ME		Mexican Sand			$ 1750
2603SGTL-SD		Sandbar			$ 1750
2603SGTL-ST		Sterling Silver			$ 1750
2603SGTL-WH		White			$ 1395
2603SGTR-AL		Almond	Right-hand Drain		$ 1430
2603SGTR-BI		Biscuit			$ 1430
2603SGTR-BK		Black			$ 1750
2603SGTR-BO		Bone			$ 1430
2603SGTR-LN		Linen			$ 1430
2603SGTR-ME		Mexican Sand			$ 1750
2603SGTR-SD		Sandbar			$ 1750
2603SGTR-ST		Sterling Silver			$ 1750
2603SGTR-WH		White			$ 1395

OPTIONS

SKU	Description	MSRP
DDWO-PC	Designer drain waste & overflow kit Available finishes: White **(WH)**, Bone **(BO)**, Polished Chrome **(PC)**, Polished Brass**(PB)**, Brushed Nickel**(BN)**,	$ 288
DDWO-PB	Designer drain waste & overflow kit Available finishes: White **(WH)**, Bone **(BO)**, Polished Chrome **(PC)**, Polished Brass**(PB)**, Brushed Nickel**(BN)**,	$ 288
DDWO-BO	Designer drain waste & overflow kit Available finishes: White **(WH)**, Bone **(BO)**, Polished Chrome **(PC)**, Polished Brass**(PB)**, Brushed Nickel**(BN)**,	$ 288
DDWO-WH		$ 288
DDWO-BN		$ 288
30UPLT	Extra reinforcement for after market accessories installment. Order per wall Reinforcement is applied 30 inches and up **ONLY**,	$ 63
30UPRT		$ 63
30UPBK		$ 63
FLATLT	Extra reinforcement for after market accessories installment. Order per wall Reinforcement is applied to flat surface areas.	$ 81
FLATRT	Extra reinforcement for after market accessories installment Order per wall Reinforcement is applied to flat surface areas.	$ 81
FLATBK	Extra reinforcement for after market accessories installment. Order per wall Reinforcement is applied to flat surface areas.	$ 81
SC	Ultra strong honeycomb reinforcement for demanding applications that require additional strength	$ 101
35RKBO	Finish repair kit - Case of 12 Available in White **(WH)**, or Bone **(BO)**,	$ 303
35RKWH		$ 303

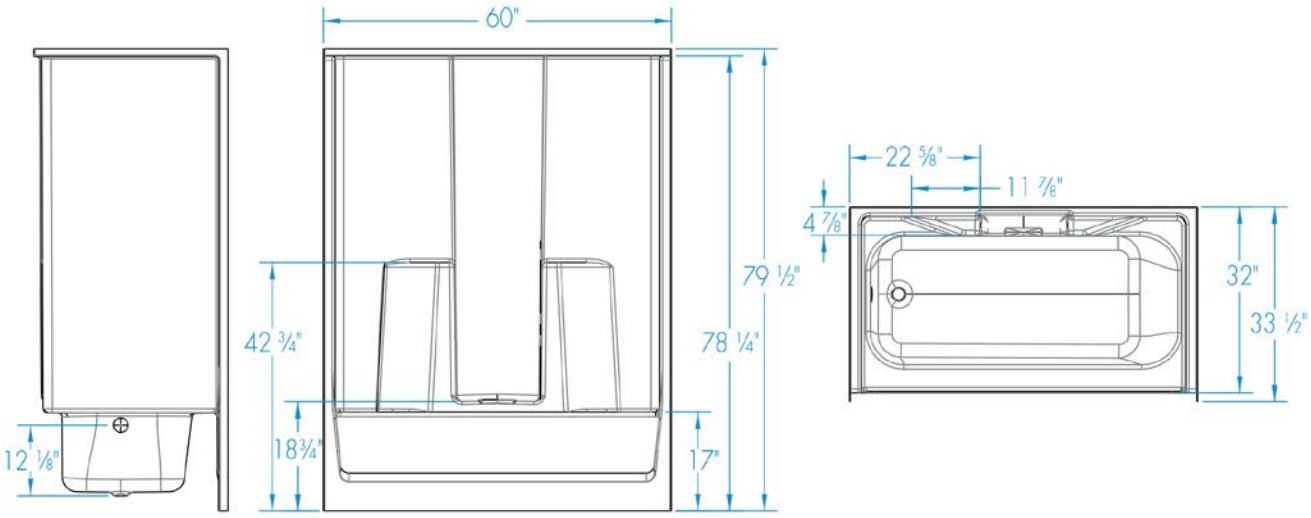
60"
22 5/8"
11 7/8"
4 7/8"
79 1/2"
42 3/4"
78 1/4"
32"
33 1/2"
12 1/8"
18 3/4"
17"

2603SMT





Material : AcrylX™

Features

- 1-Piece tub shower
- Classic smooth wall finish is easy to maintain
- Ergonomic backrest for bathing comfort
- Left or right hand drain
- Slip resistant, textured floor for safety
- AcrylX™ applied acrylic surface

2603SMT - PRICING CATEGORY : EF

SKU	System	Color	Configuration	Dimensions & Weight	MSRP
2603SMTL-AL	Soaker - No System	Almond	Left-hand Drain	60” x 32” x 76” / 138 lb 1524mm x 813mm x 1930mm / 62.59 kg	$ 1481
2603SMTL-BI		Biscuit			$ 1481
2603SMTL-BK		Black			$ 1801
2603SMTL-BO		Bone			$ 1481
2603SMTL-LN		Linen			$ 1481
2603SMTL-ME		Mexican Sand			$ 1801
2603SMTL-SD		Sandbar			$ 1801
2603SMTL-ST		Sterling Silver			$ 1801
2603SMTL-WH		White			$ 1446
2603SMTR-AL		Almond	Right-hand Drain		$ 1481
2603SMTR-BI		Biscuit			$ 1481
2603SMTR-BK		Black			$ 1801
2603SMTR-BO		Bone			$ 1481
2603SMTR-LN		Linen			$ 1481
2603SMTR-ME		Mexican Sand			$ 1801
2603SMTR-SD		Sandbar			$ 1801
2603SMTR-ST		Sterling Silver			$ 1801
2603SMTR-WH		White			$ 1446

OPTIONS

SKU	Description	MSRP
DDWO-PC	Designer drain waste & overflow kit Available finishes: White **(WH)**, Bone **(BO)**, Polished Chrome **(PC)**, Polished Brass**(PB)**, Brushed Nickel**(BN)**,	$ 288
DDWO-PB	Designer drain waste & overflow kit Available finishes: White **(WH)**, Bone **(BO)**, Polished Chrome **(PC)**, Polished Brass**(PB)**, Brushed Nickel**(BN)**,	$ 288
DDWO-BO	Designer drain waste & overflow kit Available finishes: White **(WH)**, Bone **(BO)**, Polished Chrome **(PC)**, Polished Brass**(PB)**, Brushed Nickel**(BN)**,	$ 288
DDWO-WH		$ 288
DDWO-BN		$ 288
30UPLT	Extra reinforcement for after market accessories installment. Order per wall Reinforcement is applied 30 inches and up **ONLY**,	$ 63
30UPRT		$ 63
30UPBK		$ 63
FLATLT	Extra reinforcement for after market accessories installment. Order per wall Reinforcement is applied to flat surface areas.	$ 81
FLATRT	Extra reinforcement for after market accessories installment Order per wall Reinforcement is applied to flat surface areas.	$ 81
FLATBK	Extra reinforcement for after market accessories installment. Order per wall Reinforcement is applied to flat surface areas.	$ 81
SC	Ultra strong honeycomb reinforcement for demanding applications that require additional strength	$ 101
35RKBO	Finish repair kit - Case of 12 Available in White **(WH)**, or Bone **(BO)**,	$ 303
35RKWH		$ 303

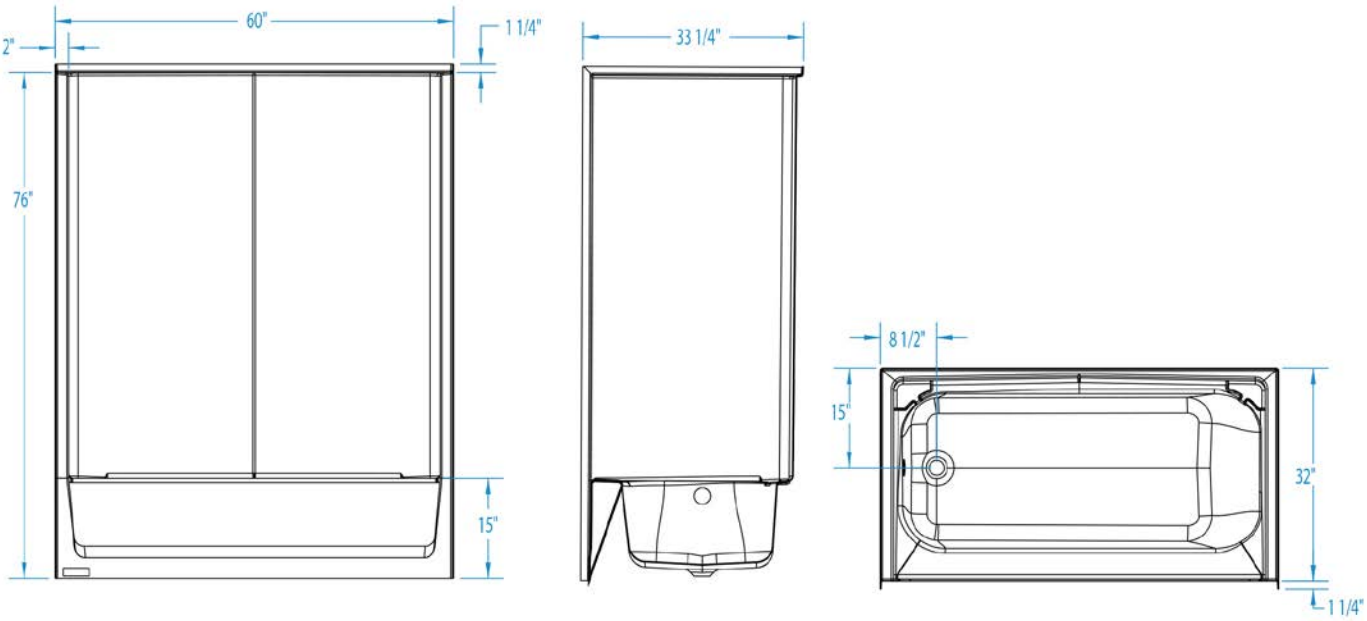
60"
2"
1 1/4"
76"
15"
33 1/4"
8 1/2"
15"
32"
1 1/4"

2603SMTM AFR



Material : AcrylX™

Features

- 1-Piece tub shower
- Classic smooth wall finish is easy to maintain
- This AFR unit accommodates the installation of drain, waste and overflow above the floor
- Ergonomic backrest for bathing comfort
- Left or right hand drain
- Slip resistant, textured floor for safety
- AcrylX™ applied acrylic surface

2603SMTM AFR - PRICING CATEGORY : EF

SKU	System	Color	Configuration	Dimensions & Weight	MSRP
2603SMTML-AL	Soaker - No System	Almond	Left-hand Drain	60” x 32” x 76” / 138 lb 1524mm x 813mm x 1930mm / 62.59 kg	$ 1675
2603SMTML-BI		Biscuit			$ 1675
2603SMTML-BK		Black			$ 1995
2603SMTML-BO		Bone			$ 1675
2603SMTML-LN		Linen			$ 1675
2603SMTML-ME		Mexican Sand			$ 1995
2603SMTML-SD		Sandbar			$ 1995
2603SMTML-ST		Sterling Silver			$ 1995
2603SMTML-WH		White			$ 1640
2603SMTMR-AL		Almond	Right-hand Drain		$ 1675
2603SMTMR-BI		Biscuit			$ 1675
2603SMTMR-BK		Black			$ 1995
2603SMTMR-BO		Bone			$ 1675
2603SMTMR-LN		Linen			$ 1675
2603SMTMR-ME		Mexican Sand			$ 1995
2603SMTMR-SD		Sandbar			$ 1995
2603SMTMR-ST		Sterling Silver			$ 1995
2603SMTMR-WH		White			$ 1640

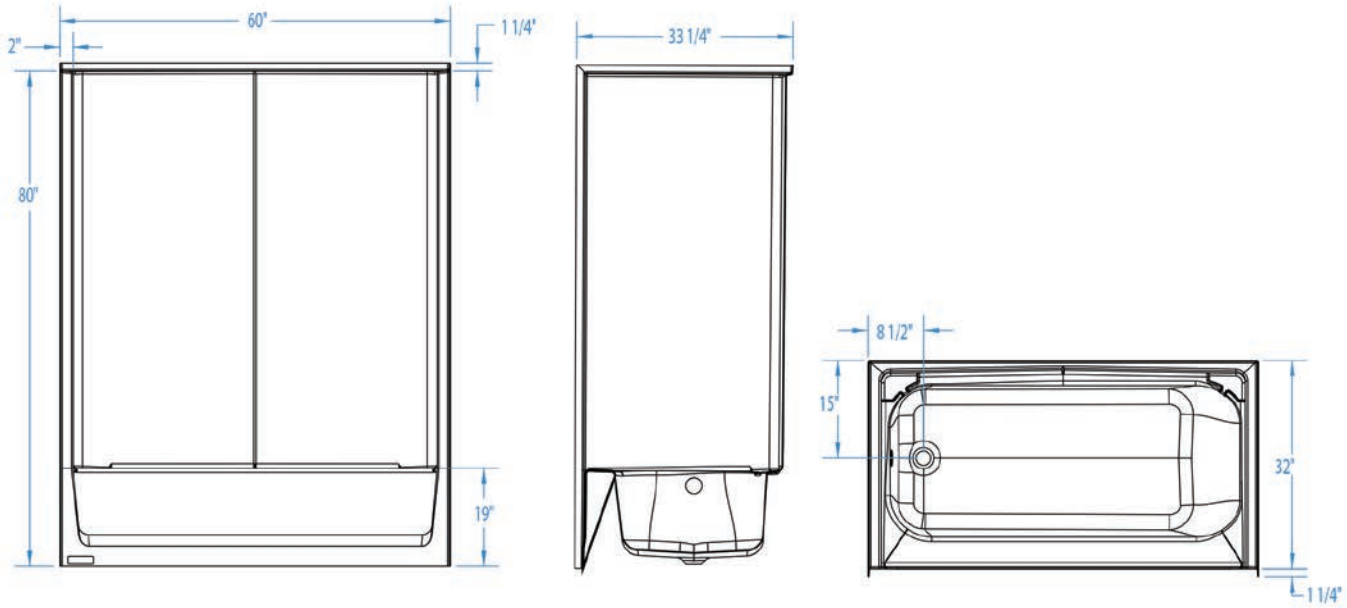
60"
2"
1 1/4"
80"
19"
33 1/4"
8 1/2"
15"
32"
1 1/4"

2603ST3P



Material : AcrylX™

Features

- 3-Piece tub shower ideal for remodeling projects
- Smooth square tile wall finish is easy to clean with no messy grout lines
- Molded toiletry shelves
- Ergonomic backrest for bathing comfort
- Molded armrests
- Left or right hand drain
- Slip resistant, textured floor for safety
- AcrylX™ applied acrylic surface

2603ST3P - PRICING CATEGORY : ER

SKU	System	Color	Configuration	Dimensions & Weight	MSRP
2603ST3PL-AL	Soaker - No System	Almond	Left-hand Drain	60” x 30” x 72” / 135 lb 1524mm x 762mm x 1829mm / 61.22 kg	$ 1367
2603ST3PL-BI		Biscuit			$ 1367
2603ST3PL-BK		Black			$ 1687
2603ST3PL-BO		Bone			$ 1367
2603ST3PL-LN		Linen			$ 1367
2603ST3PL-ME		Mexican Sand			$ 1687
2603ST3PL-SD		Sandbar			$ 1687
2603ST3PL-ST		Sterling Silver			$ 1687
2603ST3PL-WH		White			$ 1332
2603ST3PR-AL		Almond	Right-hand Drain		$ 1367
2603ST3PR-BI		Biscuit			$ 1367
2603ST3PR-BK		Black			$ 1687
2603ST3PR-BO		Bone			$ 1367
2603ST3PR-LN		Linen			$ 1367
2603ST3PR-ME		Mexican Sand			$ 1687
2603ST3PR-SD		Sandbar			$ 1687
2603ST3PR-ST		Sterling Silver			$ 1687
2603ST3PR-WH		White			$ 1332

OPTIONS

SKU	Description	MSRP
DDWO-PC	Designer drain waste & overflow kit Available finishes: White **(WH)**, Bone **(BO)**, Polished Chrome **(PC)**, Polished Brass**(PB)**, Brushed Nickel**(BN)**,	$ 288
DDWO-PB	Designer drain waste & overflow kit Available finishes: White **(WH)**, Bone **(BO)**, Polished Chrome **(PC)**, Polished Brass**(PB)**, Brushed Nickel**(BN)**,	$ 288
DDWO-BO	Designer drain waste & overflow kit Available finishes: White **(WH)**, Bone **(BO)**, Polished Chrome **(PC)**, Polished Brass**(PB)**, Brushed Nickel**(BN)**,	$ 288
DDWO-WH		$ 288
DDWO-BN		$ 288
30UPLT	Extra reinforcement for after market accessories installment. Order per wall Reinforcement is applied 30 inches and up **ONLY**,	$ 63
30UPRT		$ 63
30UPBK		$ 63
FLATLT	Extra reinforcement for after market accessories installment. Order per wall Reinforcement is applied to flat surface areas.	$ 81
FLATRT	Extra reinforcement for after market accessories installment Order per wall Reinforcement is applied to flat surface areas.	$ 81
FLATBK	Extra reinforcement for after market accessories installment. Order per wall Reinforcement is applied to flat surface areas.	$ 81
SC	Ultra strong honeycomb reinforcement for demanding applications that require additional strength	$ 101
35RKBO	Finish repair kit - Case of 12 Available in White **(WH)**, or Bone **(BO)**,	$ 303
35RKWH		$ 303

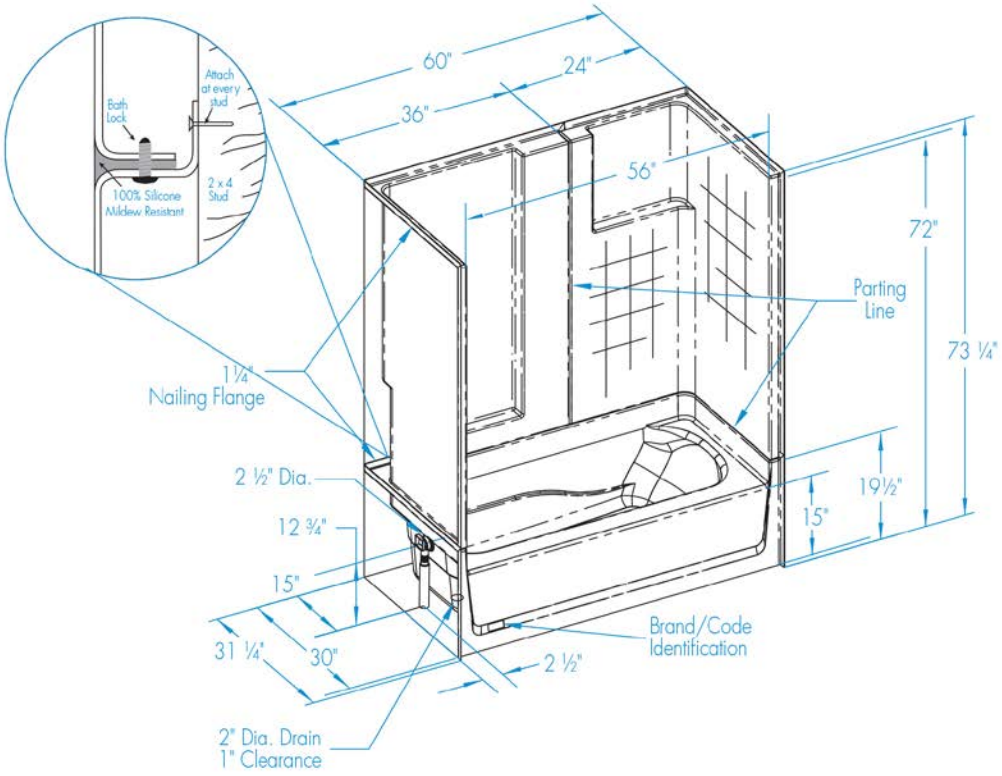
Bath Lock
Attach at every stud
100% Silicone Mildew Resistant
2 x 4 Stud
60"
24"
36"
56"
72"
Parting Line
73 ¼"
1¼" Nailing Flange
2 ½" Dia.
12 ¾"
15"
19½"
15"
31 ¼"
30"
2 ½"
Brand/Code Identification
2" Dia. Drain
1" Clearance

2603TRIO



Material : AcrylX™

Features

- 3-Piece tub shower ideal for remodeling projects
- Classic smooth wall finish is easy to maintain
- Molded toiletry shelves (on right side of unit, regardless of drain option
- Ergonomic backrest for bathing comfort
- Left or right hand drain
- Slip resistant, textured floor for safety
- AcrylX™ applied acrylic surface
- Available optional features include: reinforced walls, factory installed grab bars and designer drain waste and overflow

2603TRIO - PRICING CATEGORY : ER

SKU	System	Color	Configuration	Dimensions & Weight	MSRP
2603TRIOL-AL	Soaker - No System	Almond	Left-hand Drain	60” x 30” x 72” / 138 lb 1524mm x 762mm x 1829mm / 62.59 kg	$ 1291
2603TRIOL-BI		Biscuit			$ 1291
2603TRIOL-BK		Black			$ 1611
2603TRIOL-BO		Bone			$ 1291
2603TRIOL-LN		Linen			$ 1291
2603TRIOL-ME		Mexican Sand			$ 1611
2603TRIOL-SD		Sandbar			$ 1611
2603TRIOL-ST		Sterling Silver			$ 1611
2603TRIOL-WH		White			$ 1256
2603TRIOR-AL		Almond	Right-hand Drain		$ 1291
2603TRIOR-BI		Biscuit			$ 1291
2603TRIOR-BK		Black			$ 1611
2603TRIOR-BO		Bone			$ 1291
2603TRIOR-LN		Linen			$ 1291
2603TRIOR-ME		Mexican Sand			$ 1611
2603TRIOR-SD		Sandbar			$ 1611
2603TRIOR-ST		Sterling Silver			$ 1611
2603TRIOR-WH		White			$ 1256

OPTIONS

SKU	Description	MSRP
DDWO-PC	Designer drain waste & overflow kit Available finishes: White **(WH)**, Bone **(BO)**, Polished Chrome **(PC)**, Polished Brass**(PB)**, Brushed Nickel**(BN)**,	$ 288
DDWO-PB	Designer drain waste & overflow kit Available finishes: White **(WH)**, Bone **(BO)**, Polished Chrome **(PC)**, Polished Brass**(PB)**, Brushed Nickel**(BN)**,	$ 288
DDWO-BO	Designer drain waste & overflow kit Available finishes: White **(WH)**, Bone **(BO)**, Polished Chrome **(PC)**, Polished Brass**(PB)**, Brushed Nickel**(BN)**,	$ 288
DDWO-WH		$ 288
DDWO-BN		$ 288
30UPLT	Extra reinforcement for after market accessories installment. Order per wall Reinforcement is applied 30 inches and up **ONLY**,	$ 63
30UPRT		$ 63
30UPBK		$ 63
FLATLT	Extra reinforcement for after market accessories installment. Order per wall Reinforcement is applied to flat surface areas.	$ 81
FLATRT	Extra reinforcement for after market accessories installment Order per wall Reinforcement is applied to flat surface areas.	$ 81
FLATBK	Extra reinforcement for after market accessories installment. Order per wall Reinforcement is applied to flat surface areas.	$ 81
35RKBO	Finish repair kit - Case of 12 Available in White **(WH)**, or Bone **(BO)**,	$ 303
35RKWH		$ 303

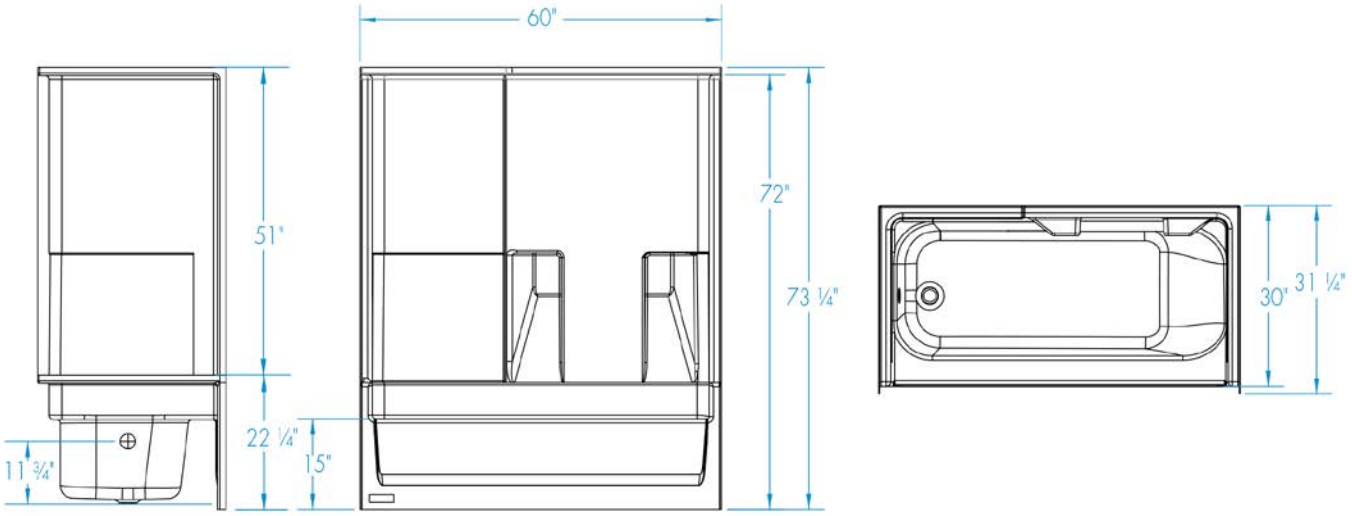
60"
72"
73 ¼"
51"
22 ¼"
15"
11 ¾"
30"
31 ¼"

2603TRIOM AFR



Material : AcrylX™

Features

- 3-Piece tub shower ideal for remodeling projects
- Classic smooth wall finish is easy to maintain
- Molded toiletry shelves (on right side of unit, regardless of drain option
- Ergonomic backrest for bathing comfort
- This AFR unit accommodates the installation of drain, waste and overflow above the floor
- Left or right hand drain
- Slip resistant, textured floor for safety
- AcrylX™ applied acrylic surface

2603TRIOM AFR - PRICING CATEGORY : ER

SKU	System	Color	Configuration	Dimensions & Weight	MSRP
2603TRIOML-AL	Soaker - No System	Almond	Left-hand Drain	60” x 30” x 74” / 138 lb 1524mm x 762mm x 1880mm / 62.59 kg	$ 1254
2603TRIOML-BI		Biscuit			$ 1254
2603TRIOML-BK		Black			$ 1574
2603TRIOML-BO		Bone			$ 1254
2603TRIOML-LN		Linen			$ 1254
2603TRIOML-ME		Mexican Sand			$ 1574
2603TRIOML-SD		Sandbar			$ 1574
2603TRIOML-ST		Sterling Silver			$ 1574
2603TRIOML-WH		White			$ 1219
2603TRIOMR-AL		Almond	Right-hand Drain		$ 1254
2603TRIOMR-BI		Biscuit			$ 1254
2603TRIOMR-BK		Black			$ 1574
2603TRIOMR-BO		Bone			$ 1254
2603TRIOMR-LN		Linen			$ 1254
2603TRIOMR-ME		Mexican Sand			$ 1574
2603TRIOMR-SD		Sandbar			$ 1574
2603TRIOMR-ST		Sterling Silver			$ 1574
2603TRIOMR-WH		White			$ 1219

OPTIONS

SKU	Description	MSRP
DDWO-PC	Designer drain waste & overflow kit Available finishes: White **(WH)**, Bone **(BO)**, Polished Chrome **(PC)**, Polished Brass**(PB)**, Brushed Nickel**(BN)**,	$ 288
DDWO-PB	Designer drain waste & overflow kit Available finishes: White **(WH)**, Bone **(BO)**, Polished Chrome **(PC)**, Polished Brass**(PB)**, Brushed Nickel**(BN)**,	$ 288
DDWO-BO	Designer drain waste & overflow kit Available finishes: White **(WH)**, Bone **(BO)**, Polished Chrome **(PC)**, Polished Brass**(PB)**, Brushed Nickel**(BN)**,	$ 288
DDWO-WH		$ 288
DDWO-BN		$ 288
30UPLT	Extra reinforcement for after market accessories installment. Order per wall Reinforcement is applied 30 inches and up **ONLY**,	$ 63
30UPRT		$ 63
30UPBK		$ 63
FLATLT	Extra reinforcement for after market accessories installment. Order per wall Reinforcement is applied to flat surface areas.	$ 81
FLATRT	Extra reinforcement for after market accessories installment Order per wall Reinforcement is applied to flat surface areas.	$ 81
FLATBK	Extra reinforcement for after market accessories installment. Order per wall Reinforcement is applied to flat surface areas.	$ 81
35RKBO	Finish repair kit - Case of 12 Available in White **(WH)**, or Bone **(BO)**,	$ 303
35RKWH		$ 303

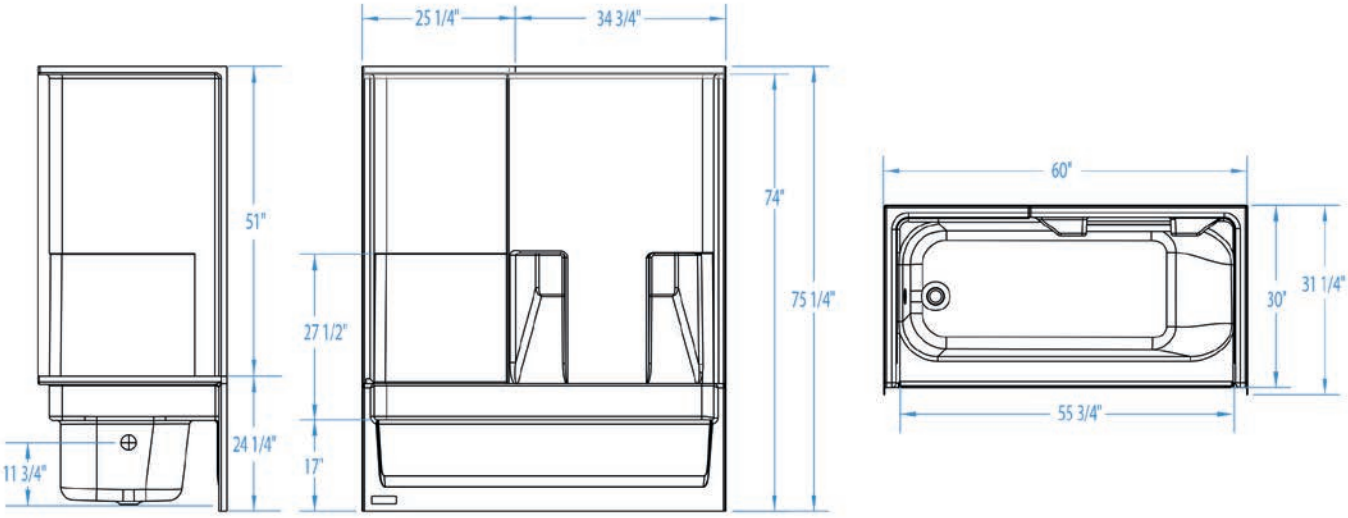
25 1/4"
34 3/4"
51"
74"
75 1/4"
27 1/2"
24 1/4"
11 3/4"
17"
60"
30"
31 1/4"
55 3/4"

6030SM AFR

Material : AcrylX™

Features

- 1-Piece tub shower
- Classic smooth wall finish is easy to maintain
- Full wall reinforcement for installation of future grab bars
- Slip resistant, textured floor for safety
- Left or right hand drain
- AcrlyX™ applied acrylic surface

6030SM AFR - PRICING CATEGORY : EF

SKU	System	Color	Configuration	Dimensions & Weight	MSRP
6030SML-AL	Soaker - No System	Almond	Left-hand Drain	60” x 30” x 76” / 195 lb 1524mm x 762mm x 1930mm / 88.44 kg	$ 1573
6030SML-BI		Biscuit			$ 1573
6030SML-BK		Black			$ 1893
6030SML-BO		Bone			$ 1573
6030SML-LN		Linen			$ 1573
6030SML-ME		Mexican Sand			$ 1893
6030SML-SD		Sandbar			$ 1893
6030SML-ST		Sterling Silver			$ 1893
6030SML-WH		White			$ 1538
6030SMR-AL		Almond	Right-hand Drain		$ 1573
6030SMR-BI		Biscuit			$ 1573
6030SMR-BK		Black			$ 1893
6030SMR-BO		Bone			$ 1573
6030SMR-LN		Linen			$ 1573
6030SMR-ME		Mexican Sand			$ 1893
6030SMR-SD		Sandbar			$ 1893
6030SMR-ST		Sterling Silver			$ 1893
6030SMR-WH		White			$ 1538

OPTIONS

SKU	Description	MSRP
DDWO-PC	Designer drain waste & overflow kit Available finishes: White **(WH)**, Bone **(BO)**, Polished Chrome **(PC)**, Polished Brass**(PB)**, Brushed Nickel**(BN)**,	$ 288
DDWO-PB	Designer drain waste & overflow kit Available finishes: White **(WH)**, Bone **(BO)**, Polished Chrome **(PC)**, Polished Brass**(PB)**, Brushed Nickel**(BN)**,	$ 288
DDWO-BO	Designer drain waste & overflow kit Available finishes: White **(WH)**, Bone **(BO)**, Polished Chrome **(PC)**, Polished Brass**(PB)**, Brushed Nickel**(BN)**,	$ 288
DDWO-WH		$ 288
DDWO-BN		$ 288
35RKBO	Finish repair kit - Case of 12 Available in White **(WH)**, or Bone **(BO)**,	$ 303
35RKWH		$ 303

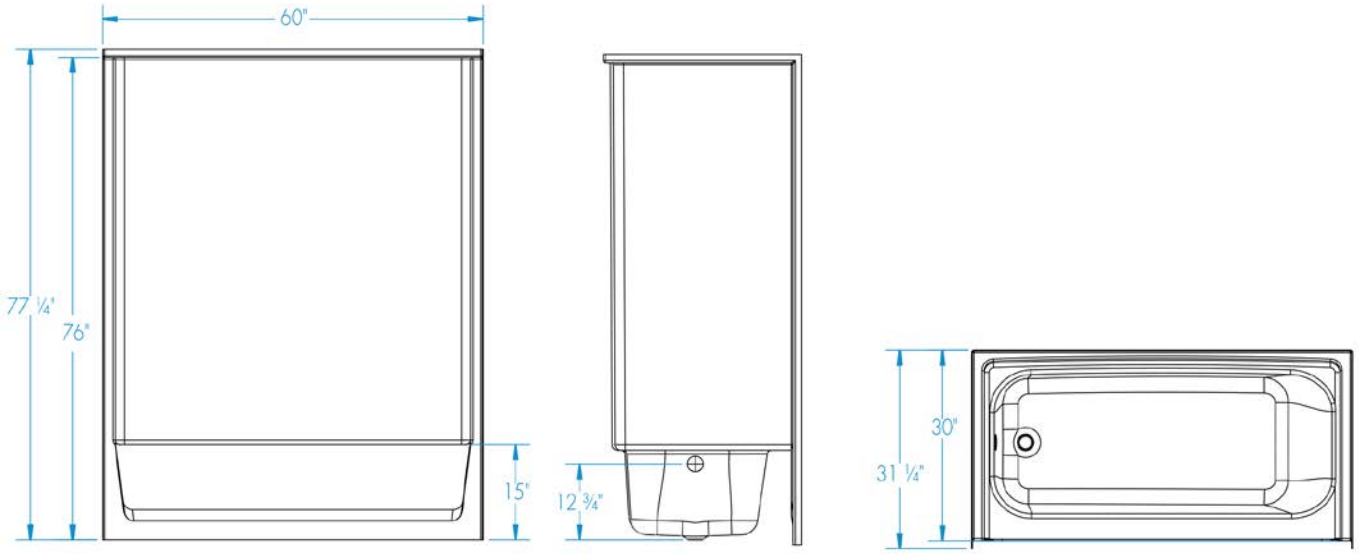
60"
77 ¼"
76"
15"
12 ¾"
30"
31 ¼"

6030STT



Material : AcrylX™

Features

- 1-Piece tub shower
- Simulated subway tile wall design is easy to clean with no messy grout lines
- Ergonomic backrest for bathing comfort
- Streamlined bathing well
- Left or right hand drain
- Slip resistant, textured floor for safety
- Left or right hand drain
- AcrlyX™ applied acrylic surface

6030STT - PRICING CATEGORY : EK

SKU	System	Color	Configuration	Dimensions & Weight	MSRP
6030STTL-AL	Soaker - No System	Almond	Left-hand Drain	60” x 30” x 72” / 122 lb 1524mm x 762mm x 1829mm / 55.33 kg	$ 1088
6030STTL-BI		Biscuit			$ 1088
6030STTL-BK		Black			$ 1408
6030STTL-BO		Bone			$ 1088
6030STTL-LN		Linen			$ 1088
6030STTL-ME		Mexican Sand			$ 1408
6030STTL-SD		Sandbar			$ 1408
6030STTL-ST		Sterling Silver			$ 1408
6030STTL-WH		White			$ 1053
6030STTR-AL		Almond	Right-hand Drain		$ 1088
6030STTR-BI		Biscuit			$ 1088
6030STTR-BK		Black			$ 1408
6030STTR-BO		Bone			$ 1088
6030STTR-LN		Linen			$ 1088
6030STTR-ME		Mexican Sand			$ 1408
6030STTR-SD		Sandbar			$ 1408
6030STTR-ST		Sterling Silver			$ 1408
6030STTR-WH		White			$ 1053

OPTIONS

SKU	Description	MSRP
DDWO-PC	Designer drain waste & overflow kit Available finishes: White **(WH)**, Bone **(BO)**, Polished Chrome **(PC)**, Polished Brass**(PB)**, Brushed Nickel**(BN)**,	$ 288
DDWO-PB	Designer drain waste & overflow kit Available finishes: White **(WH)**, Bone **(BO)**, Polished Chrome **(PC)**, Polished Brass**(PB)**, Brushed Nickel**(BN)**,	$ 288
DDWO-BO	Designer drain waste & overflow kit Available finishes: White **(WH)**, Bone **(BO)**, Polished Chrome **(PC)**, Polished Brass**(PB)**, Brushed Nickel**(BN)**,	$ 288
DDWO-WH		$ 288
DDWO-BN		$ 288
30UPLT	Extra reinforcement for after market accessories installment. Order per wall Reinforcement is applied 30 inches and up **ONLY**,	$ 63
30UPRT		$ 63
30UPBK		$ 63
FLATLT	Extra reinforcement for after market accessories installment. Order per wall Reinforcement is applied to flat surface areas.	$ 81
FLATRT	Extra reinforcement for after market accessories installment Order per wall Reinforcement is applied to flat surface areas.	$ 81
FLATBK	Extra reinforcement for after market accessories installment. Order per wall Reinforcement is applied to flat surface areas.	$ 81
SC	Ultra strong honeycomb reinforcement for demanding applications that require additional strength	$ 101
35RKBO	Finish repair kit - Case of 12 Available in White **(WH)**, or Bone **(BO)**,	$ 303
35RKWH		$ 303

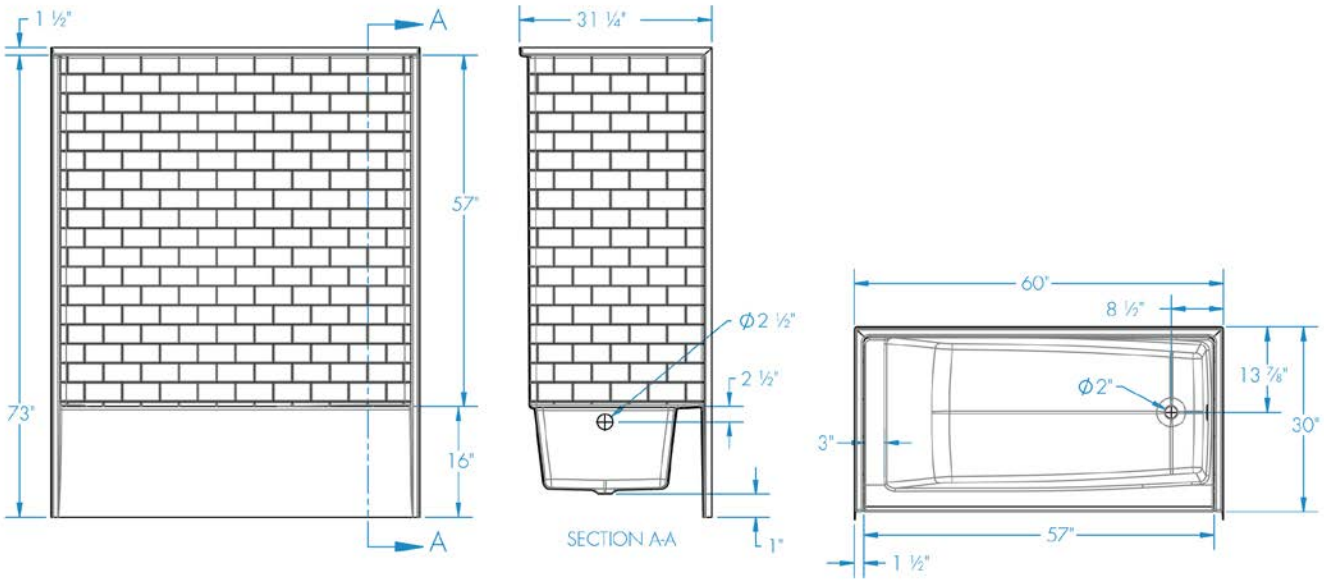
1 ½"
A
57"
73"
16"
A
31 ¼"
Ø2 ½"
2 ½"
SECTION A-A
1"
60"
8 ½"
Ø2"
13 ⅞"
30"
3"
57"
1 ½"

6030STTM AFR



Material : AcrylX™

Features

- 1-Piece tub shower
- Simulated subway tile wall design is easy to clean with no messy grout lines
- Ergonomic backrest for bathing comfort
- Streamlined bathing well
- This AFR unit accommodates the installation of drain, waste and overflow above the floor
- Left or right hand drain
- Slip resistant, textured floor for safety
- Left or right hand drain
- AcrlyX™ applied acrylic surface

6030STTM AFR - PRICING CATEGORY : EK

SKU	System	Color	Configuration	Dimensions & Weight	MSRP
6030STTML-AL	Soaker - No System	Almond	Left-hand Drain	60” x 30” x 75” / 125 lb 1524mm x 762mm x 1905mm / 56.69 kg	$ 1125
6030STTML-BI		Biscuit			$ 1125
6030STTML-BK		Black			$ 1445
6030STTML-BO		Bone			$ 1125
6030STTML-LN		Linen			$ 1125
6030STTML-ME		Mexican Sand			$ 1445
6030STTML-SD		Sandbar			$ 1445
6030STTML-ST		Sterling Silver			$ 1445
6030STTML-WH		White			$ 1090
6030STTMR-AL		Almond	Right-hand Drain		$ 1125
6030STTMR-BI		Biscuit			$ 1125
6030STTMR-BK		Black			$ 1445
6030STTMR-BO		Bone			$ 1125
6030STTMR-LN		Linen			$ 1125
6030STTMR-ME		Mexican Sand			$ 1445
6030STTMR-SD		Sandbar			$ 1445
6030STTMR-ST		Sterling Silver			$ 1445
6030STTMR-WH		White			$ 1090

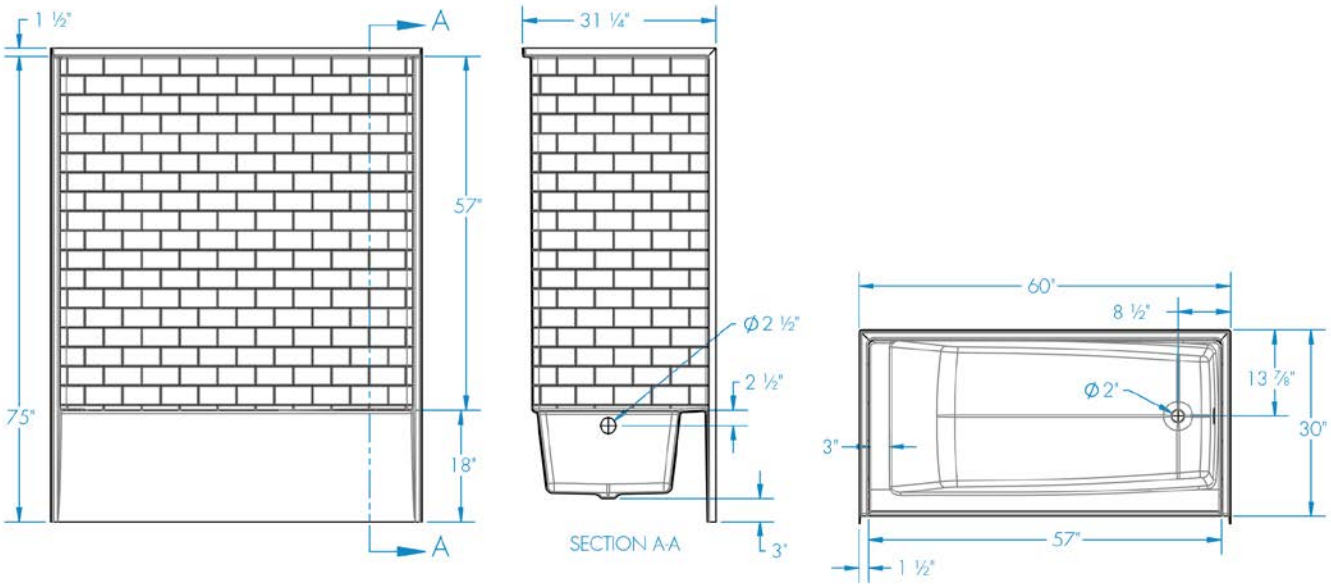
1 ½"
A
57"
75"
18"
A
31 ¼"
Ø2 ½"
2 ½"
SECTION A-A
3"
60"
8 ½"
Ø2"
13 ⅞"
30"
3"
57"
1 ½"

6032CTT





Material : AcrylX™

Features

- 1-Piece tub shower
- Smooth square tile wall finish is easy to clean, no messy grout lines
- Extra tall extended wall height
- Molded toiletry shelves
- Ergonomic backrest for bathing comfort
- Left or right hand drain
- Slip resistant, textured floor for safety
- AcrylX™ applied acrylic surface

6032CTT - PRICING CATEGORY : EF

SKU	System	Color	Configuration	Dimensions & Weight	MSRP
6032CTTL-AL	Soaker - No System	Almond	Left-hand Drain	60” x 32” x 80” / 140 lb 1524mm x 813mm x 2032mm / 63.49 kg	$ 1425
6032CTTL-BI		Biscuit			$ 1425
6032CTTL-BK		Black			$ 1745
6032CTTL-BO		Bone			$ 1425
6032CTTL-LN		Linen			$ 1425
6032CTTL-ME		Mexican Sand			$ 1745
6032CTTL-SD		Sandbar			$ 1745
6032CTTL-ST		Sterling Silver			$ 1745
6032CTTL-WH		White			$ 1390
6032CTTR-AL		Almond	Right-hand Drain		$ 1425
6032CTTR-BI		Biscuit			$ 1425
6032CTTR-BK		Black			$ 1745
6032CTTR-BO		Bone			$ 1425
6032CTTR-LN		Linen			$ 1425
6032CTTR-ME		Mexican Sand			$ 1745
6032CTTR-SD		Sandbar			$ 1745
6032CTTR-ST		Sterling Silver			$ 1745
6032CTTR-WH		White			$ 1390

OPTIONS

SKU	Description	MSRP
DDWO-PC	Designer drain waste & overflow kit Available finishes: White **(WH)**, Bone **(BO)**, Polished Chrome **(PC)**, Polished Brass**(PB)**, Brushed Nickel**(BN)**,	$ 288
DDWO-PB	Designer drain waste & overflow kit Available finishes: White **(WH)**, Bone **(BO)**, Polished Chrome **(PC)**, Polished Brass**(PB)**, Brushed Nickel**(BN)**,	$ 288
DDWO-BO	Designer drain waste & overflow kit Available finishes: White **(WH)**, Bone **(BO)**, Polished Chrome **(PC)**, Polished Brass**(PB)**, Brushed Nickel**(BN)**,	$ 288
DDWO-WH		$ 288
DDWO-BN		$ 288
30UPLT	Extra reinforcement for after market accessories installment. Order per wall Reinforcement is applied 30 inches and up **ONLY**,	$ 63
30UPRT		$ 63
30UPBK		$ 63
FLATLT	Extra reinforcement for after market accessories installment. Order per wall Reinforcement is applied to flat surface areas.	$ 81
FLATRT	Extra reinforcement for after market accessories installment Order per wall Reinforcement is applied to flat surface areas.	$ 81
FLATBK	Extra reinforcement for after market accessories installment. Order per wall Reinforcement is applied to flat surface areas.	$ 81
SC	Ultra strong honeycomb reinforcement for demanding applications that require additional strength	$ 101
35RKBO	Finish repair kit - Case of 12 Available in White **(WH)**, or Bone **(BO)**,	$ 303
35RKWH		$ 303

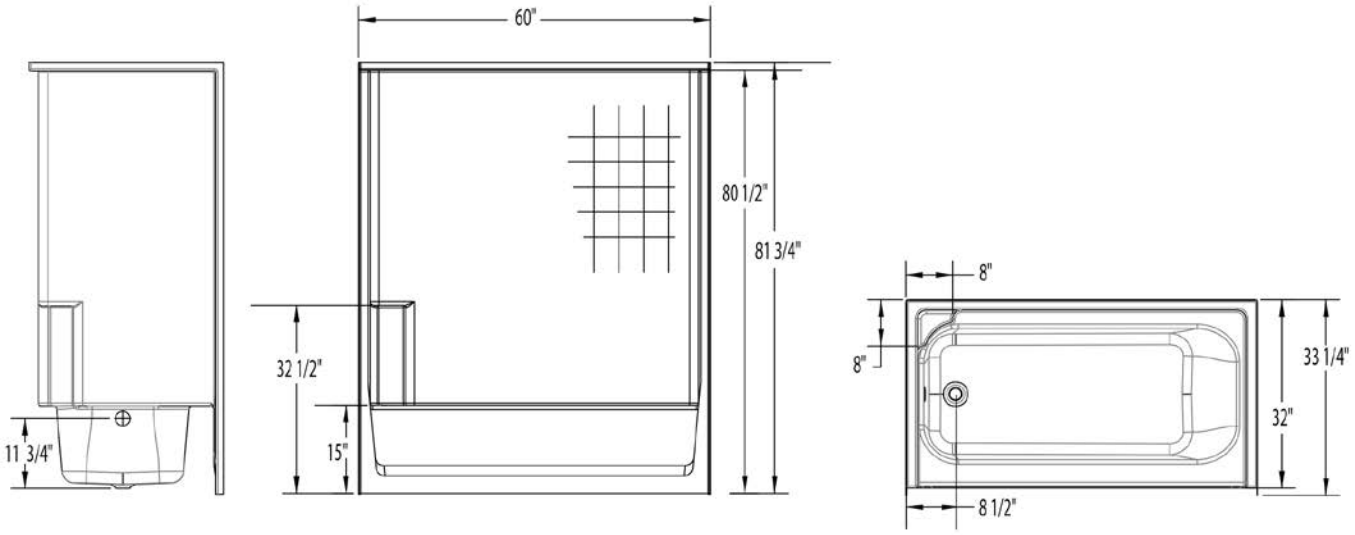
60"
80 1/2"
81 3/4"
32 1/2"
15"
11 3/4"
8"
8"
33 1/4"
32"
8 1/2"

6032STT



Material : AcrylX™

Features

- 1-Piece tub shower
- Simulated subway tile wall design is easy to clean with no messy grout lines
- Ergonomic backrest for bathing comfort
- Streamlined bathing well
- Left or right hand drain
- Slip resistant, textured floor for safety
- ArmorCore™ reinforced bottom
- AcrlyX™ applied acrylic surface

6032STT - PRICING CATEGORY : EK

SKU	System	Color	Configuration	Dimensions & Weight	MSRP
6032STTL-BI	Soaker - No System	Biscuit	Left-hand Drain	60” x 32” x 80” / 137 lb 1524mm x 813mm x 2032mm / 62.13 kg	$ 1162
6032STTL-BO		Bone			$ 1162
6032STTL-WH		White			$ 1127
6032STTR-BI		Biscuit	Right-hand Drain		$ 1162
6032STTR-BO		Bone			$ 1162
6032STTR-WH		White			$ 1127

OPTIONS

SKU	Description	MSRP
DDWO-PC	Designer drain waste & overflow kit Available finishes: White **(WH)**, Bone **(BO)**, Polished Chrome **(PC)**, Polished Brass**(PB)**, Brushed Nickel**(BN)**,	$ 288
DDWO-PB	Designer drain waste & overflow kit Available finishes: White **(WH)**, Bone **(BO)**, Polished Chrome **(PC)**, Polished Brass**(PB)**, Brushed Nickel**(BN)**,	$ 288
DDWO-BO	Designer drain waste & overflow kit Available finishes: White **(WH)**, Bone **(BO)**, Polished Chrome **(PC)**, Polished Brass**(PB)**, Brushed Nickel**(BN)**,	$ 288
DDWO-WH		$ 288
DDWO-BN		$ 288
30UPLT	Extra reinforcement for after market accessories installment. Order per wall Reinforcement is applied 30 inches and up **ONLY**,	$ 63
30UPRT		$ 63
30UPBK		$ 63
FLATLT	Extra reinforcement for after market accessories installment. Order per wall Reinforcement is applied to flat surface areas.	$ 81

OPTIONS

SKU	Description	MSRP
FLATRT	Extra reinforcement for after market accessories installment Order per wall Reinforcement is applied to flat surface areas.	$ 81
FLATBK	Extra reinforcement for after market accessories installment. Order per wall Reinforcement is applied to flat surface areas.	$ 81
SC	Ultra strong honeycomb reinforcement for demanding applications that require additional strength	$ 101
35RKBO	Finish repair kit - Case of 12 Available in White **(WH)**, or Bone **(BO)**,	$ 303
35RKWH		$ 303

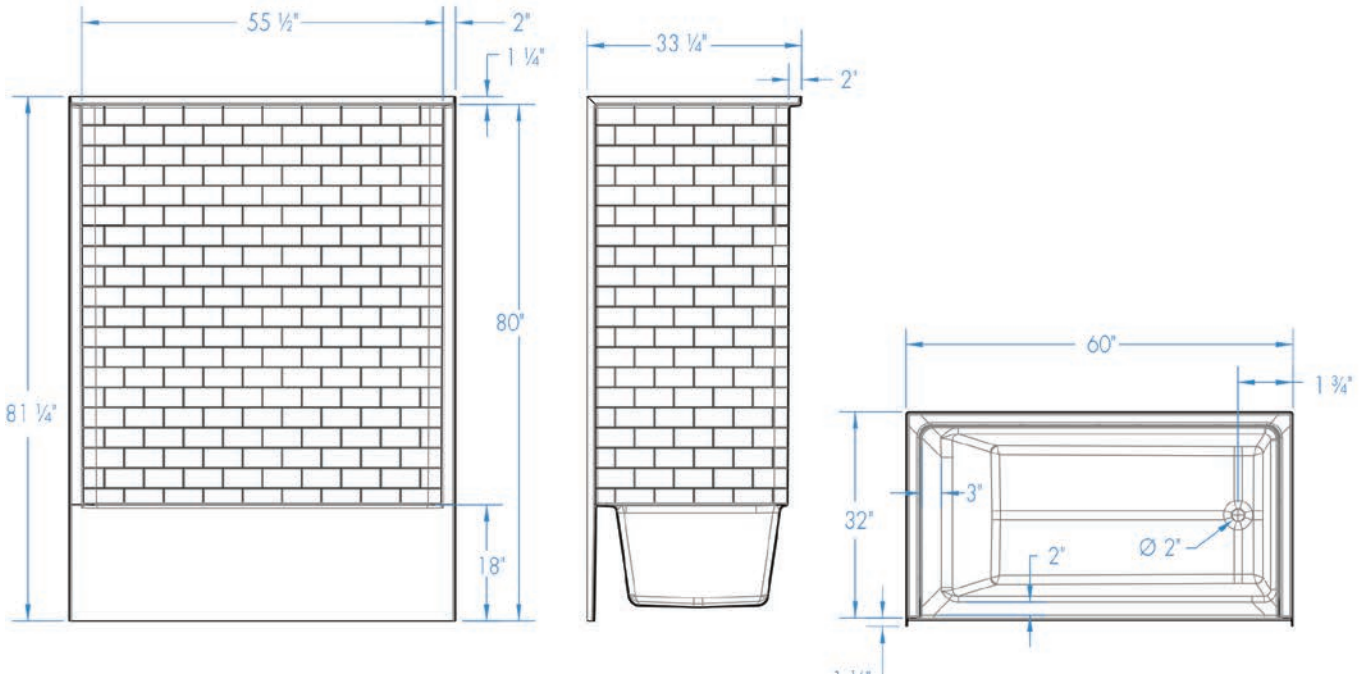
55 ½"
2"
1 ¼"
80"
81 ¼"
18"
33 ¼"
2"
60"
1 ¾"
32"
3"
2"
Ø 2"

6032STTM AFR





Material : AcrylX™

Features

- 1-Piece tub shower
- Simulated subway tile wall design is easy to clean with no messy grout lines
- Ergonomic backrest for bathing comfort
- Streamlined bathing well
- This AFR unit accommodates the installation of drain, waste and overflow above the floor
- Left or right hand drain
- Slip resistant, textured floor for safety
- ArmorCore™ reinforced bottom
- AcrlyX™ applied acrylic surface

6032STTM AFR - PRICING CATEGORY : EK

SKU	System	Color	Configuration	Dimensions & Weight	MSRP
6032STTML-AL	Soaker - No System	Almond	Left-hand Drain	60” x 32” x 83” / 137 lb 1524mm x 813mm x 2108mm / 62.13 kg	$ 1200
6032STTML-BI		Biscuit			$ 1200
6032STTML-BK		Black			$ 1520
6032STTML-BO		Bone			$ 1200
6032STTML-LN		Linen			$ 1200
6032STTML-ME		Mexican Sand			$ 1520
6032STTML-SD		Sandbar			$ 1520
6032STTML-ST		Sterling Silver			$ 1520
6032STTML-WH		White			$ 1165
6032STTMR-AL		Almond	Right-hand Drain		$ 1200
6032STTMR-BI		Biscuit			$ 1200
6032STTMR-BK		Black			$ 1520
6032STTMR-BO		Bone			$ 1200
6032STTMR-LN		Linen			$ 1200
6032STTMR-ME		Mexican Sand			$ 1520
6032STTMR-SD		Sandbar			$ 1520
6032STTMR-ST		Sterling Silver			$ 1520
6032STTMR-WH		White			$ 1165

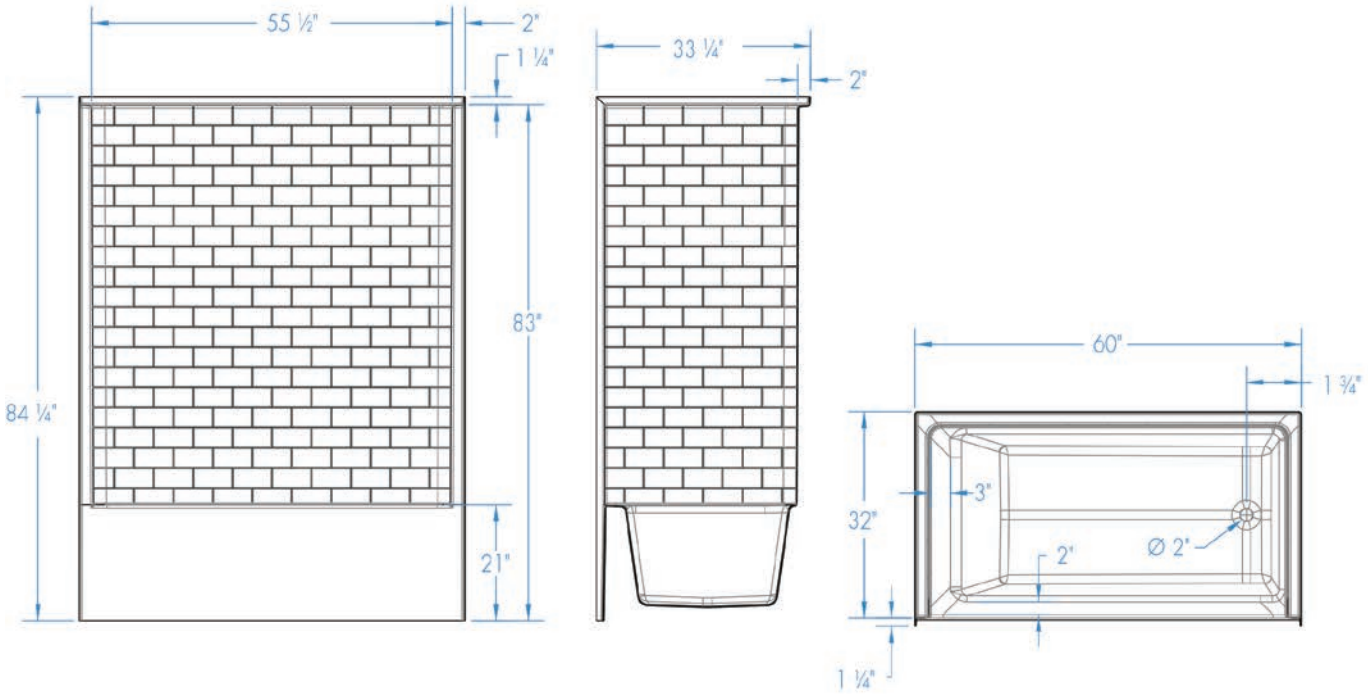
55 ½"
2"
1 ¼"
83"
84 ¼"
21"
33 ¼"
2"
60"
1 ¾"
32"
3"
2"
Ø 2"
1 ¼"

6036BSTM AFR





Material : AcrylX™

Min: 47 Gal
Max: 49 Gal

Features

- 1-Piece tub shower
- Smooth square tile wall finish is easy to clean with no messy grout lines
- Bowed front skirt creates a larger bathing basin
- Molded toiletry shelves
- Ergonomic backrest for bathing comfort
- This AFR unit accommodates the installation of drain, waste and overflow above the floor
- Right or left hand drain
- Slip resistant, textured floor for safety
- ArmorCore™ reinforced bottom< for extra strength/ li>
- AcrylX™ applied acrylic surface
- Available in the west only
- Whirlpool Features:
- Whirlpool pump
- 6 directional hydrotherapy jets
- Color matched trim
- Available in White and Biscuit/Linen only
- Pneumatic on/off control
- Advanced safety suction

6036BSTM AFR - PRICING CATEGORY : EH

SKU	System	Color	Configuration	Dimensions & Weight	MSRP
6036BSTML-AL	Soaker - No System	Almond	Left-hand Drain	60” x 36” x 70” / 154 lb 1524mm x 914mm x 1778mm / 69.84 kg	$ 1796
6036BSTML-BI		Biscuit			$ 1796
6036BSTML-BK		Black			$ 2116
6036BSTML-BO		Bone			$ 1796
6036BSTML-LN		Linen			$ 1796
6036BSTML-ME		Mexican Sand			$ 2116
6036BSTML-SD		Sandbar			$ 2116
6036BSTML-ST		Sterling Silver			$ 2116
6036BSTML-WH		White			$ 1761
6036BSTMLWP-BI	Whirlpool Massage	Biscuit			$ 4200
6036BSTMLWP-LN		Linen			$ 4200

6036BSTM AFR - PRICING CATEGORY : EH

SKU	System	Color	Configuration	Dimensions & Weight	MSRP
6036BSTMLWP-WH	Whirlpool Massage	White	Left-hand Drain	60” x 36” x 70” / 154 lb 1524mm x 914mm x 1778mm / 69.84 kg	$ 4165
6036BSTMR-AL	Soaker - No System	Almond	Right-hand Drain		$ 1796
6036BSTMR-BI		Biscuit			$ 1796
6036BSTMR-BK		Black			$ 2116
6036BSTMR-BO		Bone			$ 1796
6036BSTMR-LN		Linen			$ 1796
6036BSTMR-ME		Mexican Sand			$ 2116
6036BSTMR-SD		Sandbar			$ 2116
6036BSTMR-ST		Sterling Silver			$ 2116
6036BSTMR-WH		White			$ 1761
6036BSTMRWP-BI	Whirlpool Massage	Biscuit			$ 4200
6036BSTMRWP-LN		Linen			$ 4200
6036BSTMRWP-WH		White			$ 4165

OPTIONS

SKU	Description	MSRP
DDWO-PC	Designer drain waste & overflow kit Available finishes: White **(WH)**, Bone **(BO)**, Polished Chrome **(PC)**, Polished Brass**(PB)**, Brushed Nickel**(BN)**,	$ 288
DDWO-PB	Designer drain waste & overflow kit Available finishes: White **(WH)**, Bone **(BO)**, Polished Chrome **(PC)**, Polished Brass**(PB)**, Brushed Nickel**(BN)**,	$ 288
DDWO-BO	Designer drain waste & overflow kit Available finishes: White **(WH)**, Bone **(BO)**, Polished Chrome **(PC)**, Polished Brass**(PB)**, Brushed Nickel**(BN)**,	$ 288
DDWO-WH		$ 288
DDWO-BN		$ 288
30UPLT	Extra reinforcement for after market accessories installment. Order per wall Reinforcement is applied 30 inches and up **ONLY**,	$ 63
30UPRT		$ 63
30UPBK		$ 63
FLATLT	Extra reinforcement for after market accessories installment. Order per wall Reinforcement is applied to flat surface areas.	$ 81
FLATRT	Extra reinforcement for after market accessories installment Order per wall Reinforcement is applied to flat surface areas.	$ 81
FLATBK	Extra reinforcement for after market accessories installment. Order per wall Reinforcement is applied to flat surface areas.	$ 81
SC	Ultra strong honeycomb reinforcement for demanding applications that require additional strength	$ 101
35RKBO	Finish repair kit - Case of 12 Available in White **(WH)**, or Bone **(BO)**,	$ 303
35RKWH		$ 303

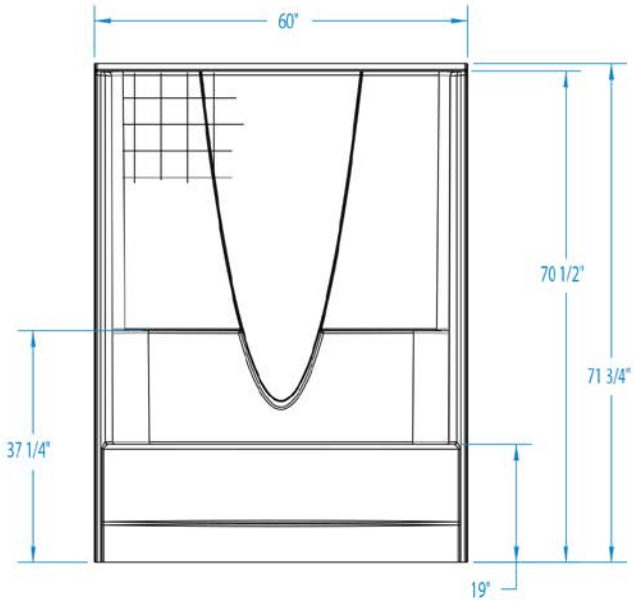

AFR: Allows for above the floor installation of waste, overflow and drainage.

Note: Not IPC compliant to 72" minimum height requirement. Alternative is 2603BSTM.

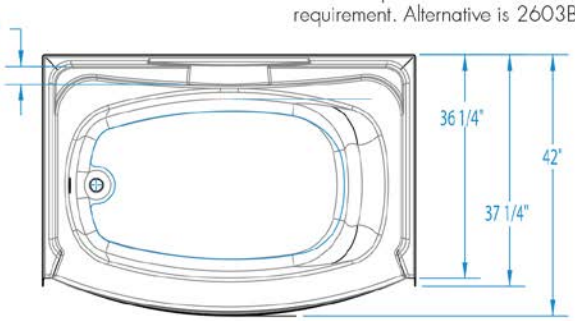

6036CTT





Material : AcrylX™

Features

- 1-Piece tub shower
- Smooth square tile wall finish is easy to clean with no messy grout lines
- Extra tall wall heightli>
- Molded toiletry shelves
- Ergonomic backrest for bathing comfort
- Right or left hand drain
- Slip resistant, textured floor for safety
- ArmorCore™ reinforced bottom< for extra strength/ li>
- AcrylX™ applied acrylic surface
- Available in the west only

6036CTT - PRICING CATEGORY : EF

SKU	System	Color	Configuration	Dimensions & Weight	MSRP
6036CTTL-AL	Soaker - No System	Almond	Left-hand Drain	60” x 36” x 80” / 153 lb 1524mm x 914mm x 2032mm / 69.39 kg	$ 1501
6036CTTL-BI		Biscuit			$ 1501
6036CTTL-BK		Black			$ 1821
6036CTTL-BO		Bone			$ 1501
6036CTTL-LN		Linen			$ 1501
6036CTTL-ME		Mexican Sand			$ 1821
6036CTTL-SD		Sandbar			$ 1821
6036CTTL-ST		Sterling Silver			$ 1821
6036CTTL-WH		White			$ 1466
6036CTTR-AL		Almond	Right-hand Drain		$ 1501
6036CTTR-BI		Biscuit			$ 1501
6036CTTR-BK		Black			$ 1821
6036CTTR-BO		Bone			$ 1501
6036CTTR-LN		Linen			$ 1501
6036CTTR-ME		Mexican Sand			$ 1821
6036CTTR-SD		Sandbar			$ 1821
6036CTTR-ST		Sterling Silver			$ 1821
6036CTTR-WH		White			$ 1466

OPTIONS

SKU	Description	MSRP
DDWO-PC	Designer drain waste & overflow kit Available finishes: White **(WH)**, Bone **(BO)**, Polished Chrome **(PC)**, Polished Brass**(PB)**, Brushed Nickel**(BN)**,	$ 288
DDWO-PB	Designer drain waste & overflow kit Available finishes: White **(WH)**, Bone **(BO)**, Polished Chrome **(PC)**, Polished Brass**(PB)**, Brushed Nickel**(BN)**,	$ 288
DDWO-BO	Designer drain waste & overflow kit Available finishes: White **(WH)**, Bone **(BO)**, Polished Chrome **(PC)**, Polished Brass**(PB)**, Brushed Nickel**(BN)**,	$ 288
DDWO-WH		$ 288
DDWO-BN		$ 288
30UPLT	Extra reinforcement for after market accessories installment. Order per wall Reinforcement is applied 30 inches and up **ONLY**,	$ 63
30UPRT		$ 63
30UPBK		$ 63
FLATLT	Extra reinforcement for after market accessories installment. Order per wall Reinforcement is applied to flat surface areas.	$ 81
FLATRT	Extra reinforcement for after market accessories installment Order per wall Reinforcement is applied to flat surface areas.	$ 81
FLATBK	Extra reinforcement for after market accessories installment. Order per wall Reinforcement is applied to flat surface areas.	$ 81
SC	Ultra strong honeycomb reinforcement for demanding applications that require additional strength	$ 101
35RKBO	Finish repair kit - Case of 12 Available in White **(WH)**, or Bone **(BO)**,	$ 303
35RKWH		$ 303

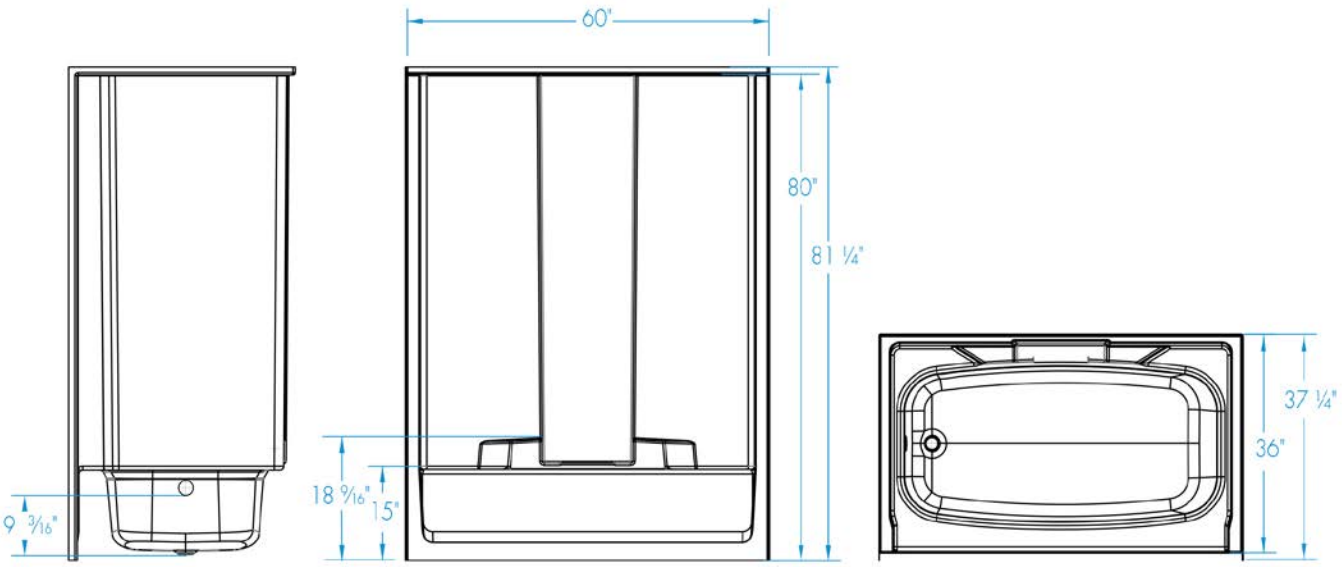
60"
80"
81 ¼"
37 ¼"
36"
18 9⁄16"
15"
9 3⁄16"

6036SG



Material : AcrylX™

Min: 35 Gal
Max: 40 Gal

Features

- 1-Piece tub shower
- Classic smooth wall finish is easy to maintain
- Molded toiletry shelves
- Ergonomic backrest for bathing comfort
- Left or right hand drain
- Slip resistant, textured floor for safety
- AcrylX™ applied acrylic surface
- Whirlpool Features:
- Whirlpool pump
- 6 directional hydrotherapy jets
- Color matched trim
- Available in White and Biscuit/Linen only
- Pneumatic on/off control
- Advanced safety suction

6036SG - PRICING CATEGORY : EH

SKU	System	Color	Configuration	Dimensions & Weight	MSRP
6036SGL-AL	Soaker - No System	Almond	Left-hand Drain	60” x 34” x 76” / 128 lb 1524mm x 864mm x 1930mm / 58.05 kg	$ 1372
6036SGL-BI		Biscuit			$ 1372
6036SGL-BK		Black			$ 1692
6036SGL-BO		Bone			$ 1372
6036SGL-LN		Linen			$ 1372
6036SGL-ME		Mexican Sand			$ 1692
6036SGL-SD		Sandbar			$ 1692
6036SGL-ST		Sterling Silver			$ 1692
6036SGL-WH		White			$ 1337
6036SGLWP-BI	Whirlpool Massage	Biscuit			$ 3532
6036SGLWP-LN		Linen			$ 3532
6036SGLWP-WH		White			$ 3497
6036SGR-AL	Soaker - No System	Almond	Right-hand Drain		$ 1372
6036SGR-BI		Biscuit			$ 1372
6036SGR-BK		Black			$ 1692
6036SGR-BO		Bone			$ 1372
6036SGR-LN		Linen			$ 1372

6036SG - PRICING CATEGORY : EH

SKU	System	Color	Configuration	Dimensions & Weight	MSRP
6036SGR-ME	Soaker - No System	Mexican Sand	Right-hand Drain	60” x 34” x 76” / 128 lb 1524mm x 864mm x 1930mm / 58.05 kg	$ 1692
6036SGR-SD		Sandbar			$ 1692
6036SGR-ST		Sterling Silver			$ 1692
6036SGR-WH		White			$ 1337
6036SGRWP-BI	Whirlpool Massage	Biscuit			$ 3532
6036SGRWP-LN		Linen			$ 3532
6036SGRWP-WH		White			$ 3497

OPTIONS

SKU	Description	MSRP
DDWO-PC	Designer drain waste & overflow kit Available finishes: White **(WH)**, Bone **(BO)**, Polished Chrome **(PC)**, Polished Brass**(PB)**, Brushed Nickel**(BN)**,	$ 288
DDWO-PB	Designer drain waste & overflow kit Available finishes: White **(WH)**, Bone **(BO)**, Polished Chrome **(PC)**, Polished Brass**(PB)**, Brushed Nickel**(BN)**,	$ 288
DDWO-BO	Designer drain waste & overflow kit Available finishes: White **(WH)**, Bone **(BO)**, Polished Chrome **(PC)**, Polished Brass**(PB)**, Brushed Nickel**(BN)**,	$ 288
DDWO-WH		$ 288
DDWO-BN		$ 288
30UPLT	Extra reinforcement for after market accessories installment. Order per wall Reinforcement is applied 30 inches and up **ONLY**,	$ 63
30UPRT		$ 63
30UPBK		$ 63
FLATLT	Extra reinforcement for after market accessories installment. Order per wall Reinforcement is applied to flat surface areas.	$ 81
FLATRT	Extra reinforcement for after market accessories installment Order per wall Reinforcement is applied to flat surface areas.	$ 81
FLATBK	Extra reinforcement for after market accessories installment. Order per wall Reinforcement is applied to flat surface areas.	$ 81
SC	Ultra strong honeycomb reinforcement for demanding applications that require additional strength	$ 101
35RKBO	Finish repair kit - Case of 12 Available in White **(WH)**, or Bone **(BO)**,	$ 303
35RKWH		$ 303

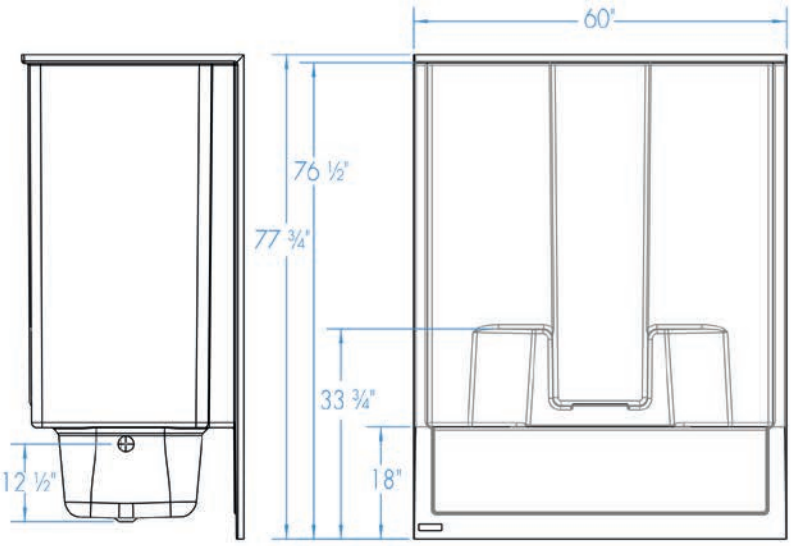
60"
76 ½"
77 ¾"
33 ¾"
18"
12 ½"

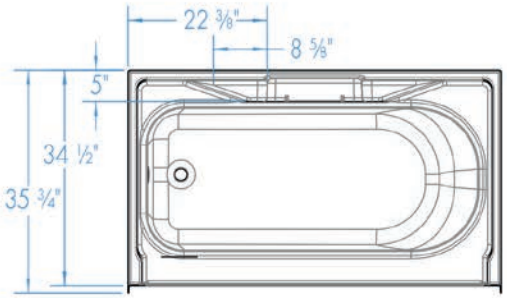
22 ⅜"
8 ⅝"
5"
34 ½"
35 ¾"

6036SGM AFR



Material : AcrylX™

Min: 35 Gal
Max: 40 Gal

Features

- 1-Piece tub shower
- Classic smooth wall finish is easy to maintain
- Molded toiletry shelves
- Ergonomic backrest for bathing comfort
- This AFR unit accommodates the installation of drain, waste and overflow above the floor
- Left or right hand drain
- Slip resistant, textured floor for safety
- AcrylX™ applied acrylic surface

6036SGM AFR - PRICING CATEGORY : EF

SKU	System	Color	Configuration	Dimensions & Weight	MSRP
6036SGML-AL	Soaker - No System	Almond	Left-hand Drain	60” x 34” x 78” / 138 lb 1524mm x 864mm x 1981mm / 62.59 kg	$ 1545
6036SGML-BI		Biscuit			$ 1545
6036SGML-BK		Black			$ 1865
6036SGML-BO		Bone			$ 1545
6036SGML-LN		Linen			$ 1545
6036SGML-ME		Mexican Sand			$ 1865
6036SGML-SD		Sandbar			$ 1865
6036SGML-ST		Sterling Silver			$ 1865
6036SGML-WH		White			$ 1510
6036SGMR-AL		Almond	Right-hand Drain		$ 1545
6036SGMR-BI		Biscuit			$ 1545
6036SGMR-BK		Black			$ 1865
6036SGMR-BO		Bone			$ 1545
6036SGMR-LN		Linen			$ 1545
6036SGMR-ME		Mexican Sand			$ 1865
6036SGMR-SD		Sandbar			$ 1865
6036SGMR-ST		Sterling Silver			$ 1865
6036SGMR-WH		White			$ 1510

OPTIONS

SKU	Description	MSRP
30UPLT	Extra reinforcement for after market accessories installment. Order per wall Reinforcement is applied 30 inches and up **ONLY**,	$ 63
30UPRT	Extra reinforcement for after market accessories installment. Order per wall Reinforcement is applied 30 inches and up **ONLY**,	$ 63
30UPBK	Extra reinforcement for after market accessories installment. Order per wall Reinforcement is applied 30 inches and up **ONLY**,	$ 63
FLATLT	Extra reinforcement for after market accessories installment. Order per wall Reinforcement is applied to flat surface areas.	$ 81
FLATRT	Extra reinforcement for after market accessories installment Order per wall Reinforcement is applied to flat surface areas.	$ 81
FLATBK	Extra reinforcement for after market accessories installment. Order per wall Reinforcement is applied to flat surface areas.	$ 81
SC	Ultra strong honeycomb reinforcement for demanding applications that require additional strength	$ 101
35RKBO	Finish repair kit - Case of 12 Available in White **(WH)**, or Bone **(BO)**,	$ 303
35RKWH		$ 303

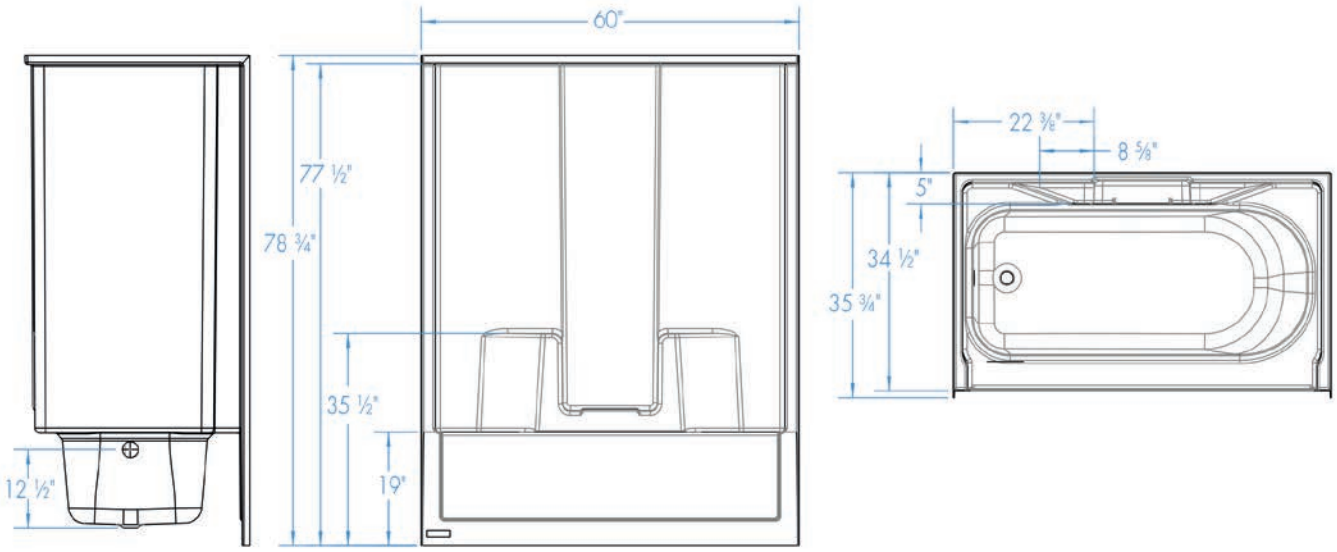
60"
77 ½"
78 ¾"
35 ½"
19"
12 ½"
22 ⅜"
8 ⅝"
5"
34 ½"
35 ¾"

6036ST





Material : AcrylX™

Min: 35 Gal
Max: 50 Gal

Features

- 1-Piece tub shower
- Smooth square tile wall finish is easy to clean, no messy grout lines
- Molded toiletry shelves
- Ergonomic backrest for bathing comfort
- This AFR unit accommodates the installation of drain, waste and overflow above the floor
- Left or right hand drain
- Slip resistant, textured floor for safety/li>
- AcrylX™ applied acrylic surface
- >

6036ST - PRICING CATEGORY : EH

SKU	System	Color	Configuration	Dimensions & Weight	MSRP
6036STL-AL	Soaker - No System	Almond	Left-hand Drain	60” x 36” x 76” / 146 lb 1524mm x 914mm x 1930mm / 66.21 kg	$ 1562
6036STL-BI		Biscuit			$ 1562
6036STL-BK		Black			$ 1882
6036STL-BO		Bone			$ 1562
6036STL-LN		Linen			$ 1562
6036STL-ME		Mexican Sand			$ 1882
6036STL-SD		Sandbar			$ 1882
6036STL-ST		Sterling Silver			$ 1882
6036STL-WH		White			$ 1527
6036STLWP-BI	Whirlpool Massage	Biscuit			$ 3608
6036STLWP-LN		Linen			$ 3608
6036STLWP-WH		White			$ 3573
6036STR-AL	Soaker - No System	Almond	Right-hand Drain		$ 1562
6036STR-BI		Biscuit			$ 1562
6036STR-BK		Black			$ 1882
6036STR-BO		Bone			$ 1562
6036STR-LN		Linen			$ 1562
6036STR-ME		Mexican Sand			$ 1882
6036STR-SD		Sandbar			$ 1882
6036STR-ST		Sterling Silver			$ 1882

6036ST - PRICING CATEGORY : EH

SKU	System	Color	Configuration	Dimensions & Weight	MSRP
6036STR-WH	Soaker - No System	White	Right-hand Drain	60” x 36” x 76” / 146 lb 1524mm x 914mm x 1930mm / 66.21 kg	$ 1527
6036STRWP-BI	Whirlpool Massage	Biscuit			$ 3608
6036STRWP-LN		Linen			$ 3608
6036STRWP-WH		White			$ 3573

OPTIONS

SKU	Description	MSRP
DDWO-PC	Designer drain waste & overflow kit Available finishes: White **(WH)**, Bone **(BO)**, Polished Chrome **(PC)**, Polished Brass**(PB)**, Brushed Nickel**(BN)**,	$ 288
DDWO-PB	Designer drain waste & overflow kit Available finishes: White **(WH)**, Bone **(BO)**, Polished Chrome **(PC)**, Polished Brass**(PB)**, Brushed Nickel**(BN)**,	$ 288
DDWO-BO	Designer drain waste & overflow kit Available finishes: White **(WH)**, Bone **(BO)**, Polished Chrome **(PC)**, Polished Brass**(PB)**, Brushed Nickel**(BN)**,	$ 288
DDWO-WH		$ 288
DDWO-BN		$ 288
30UPLT	Extra reinforcement for after market accessories installment. Order per wall Reinforcement is applied 30 inches and up **ONLY**,	$ 63
30UPRT		$ 63
30UPBK		$ 63
FLATLT	Extra reinforcement for after market accessories installment. Order per wall Reinforcement is applied to flat surface areas.	$ 81
FLATRT	Extra reinforcement for after market accessories installment Order per wall Reinforcement is applied to flat surface areas.	$ 81
FLATBK	Extra reinforcement for after market accessories installment. Order per wall Reinforcement is applied to flat surface areas.	$ 81
SC	Ultra strong honeycomb reinforcement for demanding applications that require additional strength	$ 101
35RKBO	Finish repair kit - Case of 12 Available in White **(WH)**, or Bone **(BO)**,	$ 303
35RKWH		$ 303
5715RSP	Convenient access panel Whirlpool option only	$ 240
PLL2	Pump location is applicable to whirlpools and blower location for air system No charge option Refer to technical drawing for applicable choices	$ 0
PLL3		$ 0

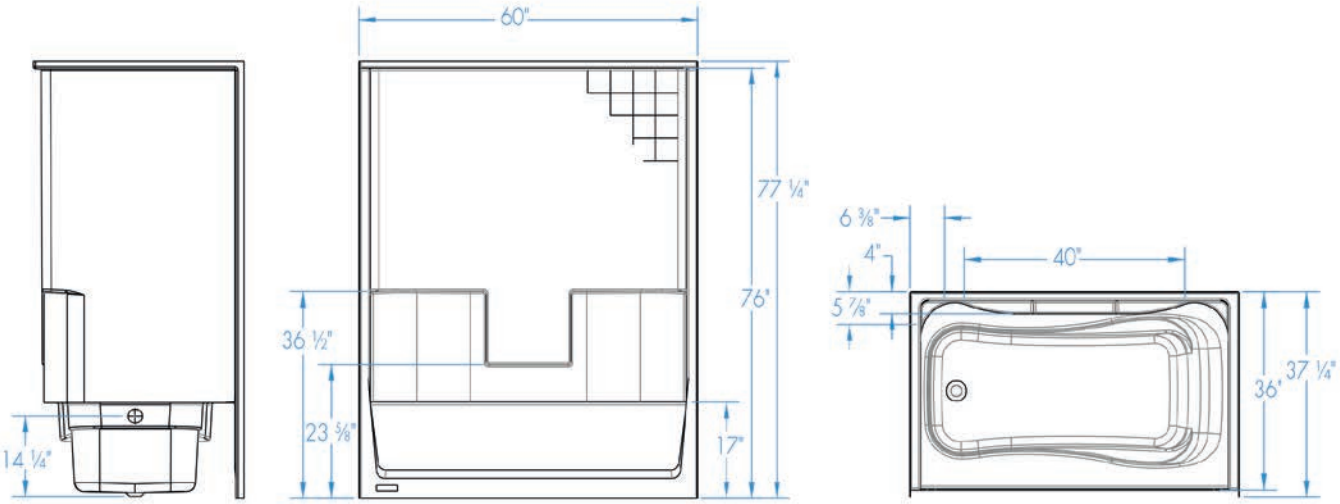
60"
77 ¼"
76"
36 ½"
23 ⅝"
17"
14 ¼"
6 ⅜"
4"
40"
5 ⅞"
36"
37 ¼"

6036STT



Material : AcrylX™

Features

- 1-Piece tub shower
- Simulated subway tile wall design is easy to clean with no messy grout lines
- Ergonomic backrest for bathing comfort
- Streamlined bathing well
- Left or right hand drain
- Slip resistant, textured floor for safety
- AcrlyX™ applied acrylic surface

6036STT - PRICING CATEGORY : EK

SKU	System	Color	Configuration	Dimensions & Weight	MSRP
6036STTL-AL	Soaker - No System	Almond	Left-hand Drain	60” x 36” x 80” / 120 lb 1524mm x 914mm x 2032mm / 54.42 kg	$ 1313
6036STTL-BI		Biscuit			$ 1313
6036STTL-BK		Black			$ 1633
6036STTL-BO		Bone			$ 1313
6036STTL-LN		Linen			$ 1313
6036STTL-ME		Mexican Sand			$ 1633
6036STTL-SD		Sandbar			$ 1633
6036STTL-ST		Sterling Silver			$ 1633
6036STTL-WH		White			$ 1278
6036STTR-AL		Almond	Right-hand Drain		$ 1313
6036STTR-BI		Biscuit			$ 1313
6036STTR-BK		Black			$ 1633
6036STTR-BO		Bone			$ 1313
6036STTR-LN		Linen			$ 1313
6036STTR-ME		Mexican Sand			$ 1633
6036STTR-SD		Sandbar			$ 1633
6036STTR-ST		Sterling Silver			$ 1633
6036STTR-WH		White			$ 1278

OPTIONS

SKU	Description	MSRP
DDWO-PC	Designer drain waste & overflow kit Available finishes: White **(WH)**, Bone **(BO)**, Polished Chrome **(PC)**, Polished Brass**(PB)**, Brushed Nickel**(BN)**,	$ 288
DDWO-PB	Designer drain waste & overflow kit Available finishes: White **(WH)**, Bone **(BO)**, Polished Chrome **(PC)**, Polished Brass**(PB)**, Brushed Nickel**(BN)**,	$ 288
DDWO-BO	Designer drain waste & overflow kit Available finishes: White **(WH)**, Bone **(BO)**, Polished Chrome **(PC)**, Polished Brass**(PB)**, Brushed Nickel**(BN)**,	$ 288
DDWO-WH		$ 288
DDWO-BN		$ 288
30UPLT	Extra reinforcement for after market accessories installment. Order per wall Reinforcement is applied 30 inches and up **ONLY**,	$ 63
30UPRT		$ 63
30UPBK		$ 63
FLATLT	Extra reinforcement for after market accessories installment. Order per wall Reinforcement is applied to flat surface areas.	$ 81
FLATRT	Extra reinforcement for after market accessories installment Order per wall Reinforcement is applied to flat surface areas.	$ 81
FLATBK	Extra reinforcement for after market accessories installment. Order per wall Reinforcement is applied to flat surface areas.	$ 81
SC	Ultra strong honeycomb reinforcement for demanding applications that require additional strength	$ 101
35RKBO	Finish repair kit - Case of 12 Available in White **(WH)**, or Bone **(BO)**,	$ 303
35RKWH		$ 303

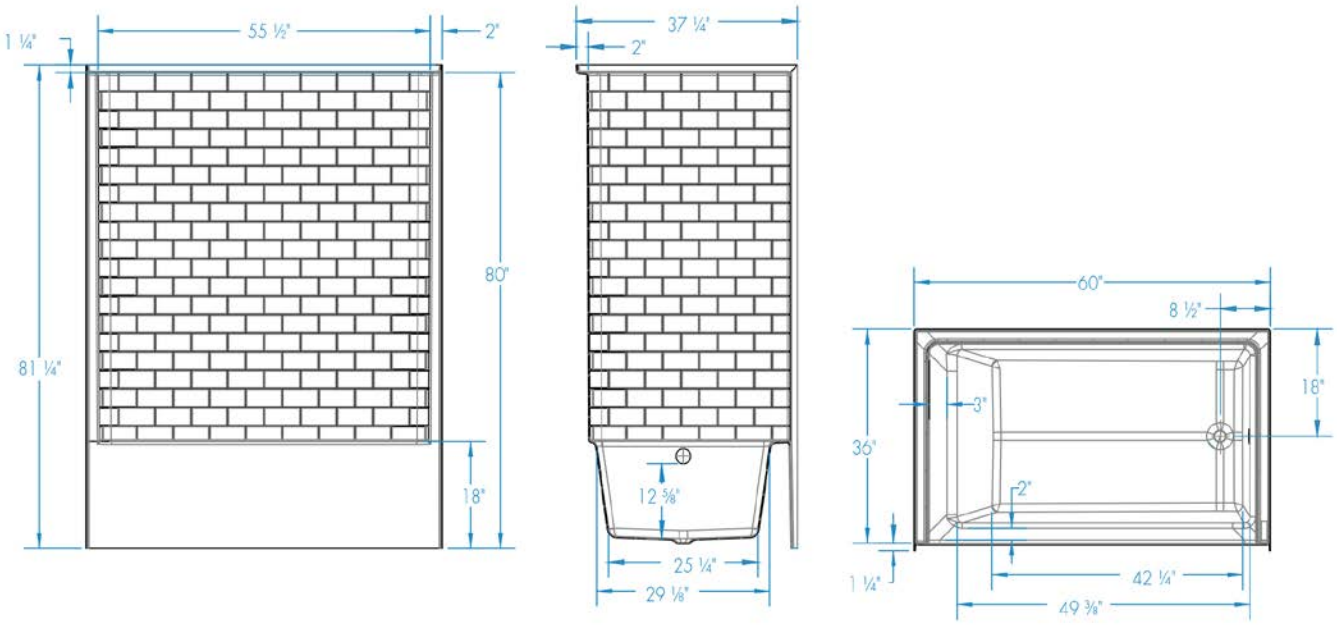
1 ¼"
55 ½"
2"
80"
81 ¼"
18"
37 ¼"
2"
12 ⅝"
25 ¼"
29 ⅛"
60"
8 ½"
18"
3"
36"
2"
1 ¼"
42 ¼"
49 ⅜"

6036STTM AFR



Material : AcrylX™

Features

- 1-Piece tub shower
- Simulated subway tile wall design is easy to clean with no messy grout lines
- Ergonomic backrest for bathing comfort
- Streamlined bathing well
- This AFR unit accommodates the installation of drain, waste and overflow above the floor
- Left or right hand drain
- Slip resistant, textured floor for safety
- AcrlyX™ applied acrylic surface

6036STTM AFR - PRICING CATEGORY : EK

SKU	System	Color	Configuration	Dimensions & Weight	MSRP
6036STTML-AL	Soaker - No System	Almond	Left-hand Drain	60” x 36” x 84” / 120 lb 1524mm x 914mm x 2134mm / 54.42 kg	$ 1351
6036STTML-BI		Biscuit			$ 1351
6036STTML-BK		Black			$ 1671
6036STTML-BO		Bone			$ 1351
6036STTML-LN		Linen			$ 1351
6036STTML-ME		Mexican Sand			$ 1671
6036STTML-SD		Sandbar			$ 1671
6036STTML-ST		Sterling Silver			$ 1671
6036STTML-WH		White			$ 1316
6036STTMR-AL		Almond	Right-hand Drain		$ 1351
6036STTMR-BI		Biscuit			$ 1351
6036STTMR-BK		Black			$ 1671
6036STTMR-BO		Bone			$ 1351
6036STTMR-LN		Linen			$ 1351
6036STTMR-ME		Mexican Sand			$ 1671
6036STTMR-SD		Sandbar			$ 1671
6036STTMR-ST		Sterling Silver			$ 1671
6036STTMR-WH		White			$ 1316

OPTIONS

SKU	Description	MSRP
30UPLT	Extra reinforcement for after market accessories installment. Order per wall Reinforcement is applied 30 inches and up **ONLY**,	$ 63
30UPRT	Extra reinforcement for after market accessories installment. Order per wall Reinforcement is applied 30 inches and up **ONLY**,	$ 63
30UPBK	Extra reinforcement for after market accessories installment. Order per wall Reinforcement is applied 30 inches and up **ONLY**,	$ 63
FLATLT	Extra reinforcement for after market accessories installment. Order per wall Reinforcement is applied to flat surface areas.	$ 81
FLATRT	Extra reinforcement for after market accessories installment Order per wall Reinforcement is applied to flat surface areas.	$ 81
FLATBK	Extra reinforcement for after market accessories installment. Order per wall Reinforcement is applied to flat surface areas.	$ 81
SC	Ultra strong honeycomb reinforcement for demanding applications that require additional strength	$ 101
35RKBO	Finish repair kit - Case of 12 Available in White **(WH)**, or Bone **(BO)**,	$ 303
35RKWH		$ 303

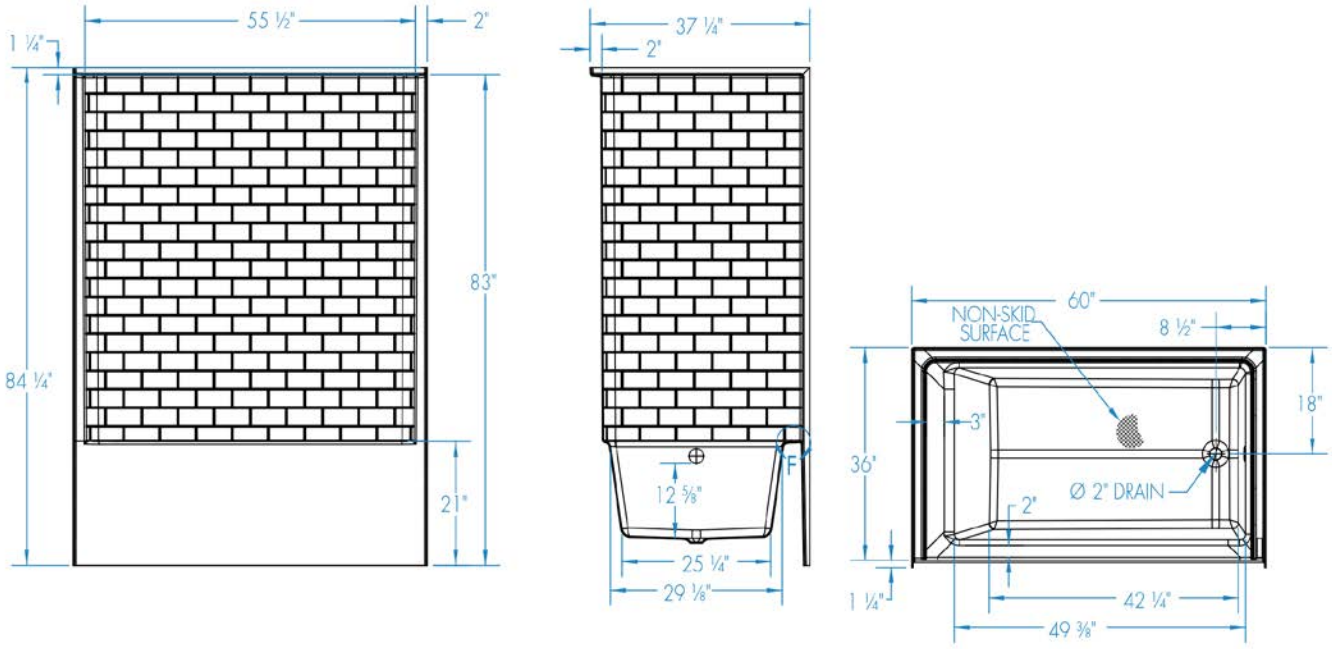
55 ½"
2"
1 ¼"
84 ¼"
83"
21"
37 ¼"
2"
12 ⅝"
25 ¼"
29 ⅛"
60"
NON-SKID SURFACE
8 ½"
18"
3"
36"
Ø 2" DRAIN
2"
1 ¼"
42 ¼"
49 ⅜"

6042ST



Material : AcrylX™

Min: 50 Gal
Max: 65 Gal

Features

- 1-Piece tub shower
- Smooth square tile wall finish is easy to clean with no messy grout lines
- Molded toiletry shelves
- Ergonomic backrest for bathing comfort
- Extra roomy bathing well
- Left or right hand drain
- Slip resistant, textured floor for safety
- AcrylX™ applied acrylic surface
- >
- Whirlpool Features:
- Whirlpool pump
- 6 directional hydrotherapy jets
- Color matched trim
- Available in White and Biscuit/Linen only
- Pneumatic on/off control
- Advanced safety suction

6042ST - PRICING CATEGORY : EH

SKU	System	Color	Configuration	Dimensions & Weight	MSRP
6042STL-AL	Soaker - No System	Almond	Left-hand Drain	60” x 42” x 74” / 152 lb 1524mm x 1067mm x 1880mm / 68.93 kg	$ 1666
6042STL-BI		Biscuit			$ 1666
6042STL-BK		Black			$ 1986
6042STL-BO		Bone			$ 1666
6042STL-LN		Linen			$ 1666
6042STL-ME		Mexican Sand			$ 1986
6042STL-SD		Sandbar			$ 1986
6042STL-ST		Sterling Silver			$ 1986
6042STL-WH		White			$ 1631
6042STLWP-BI	Whirlpool Massage	Biscuit			$ 4342
6042STLWP-LN		Linen			$ 4377
6042STLWP-WH	Soaker - No System	White			$ 1631
6042STR-AL		Almond	Right-hand Drain		$ 1666
6042STR-BI		Biscuit			$ 1666

6042ST - PRICING CATEGORY : EH

SKU	System	Color	Configuration	Dimensions & Weight	MSRP
6042STR-BK	Soaker - No System	Black	Right-hand Drain	60” x 42” x 74” / 152 lb 1524mm x 1067mm x 1880mm / 68.93 kg	$ 1986
6042STR-BO		Bone			$ 1666
6042STR-LN		Linen			$ 1666
6042STR-ME		Mexican Sand			$ 1986
6042STR-SD		Sandbar			$ 1986
6042STR-ST		Sterling Silver			$ 1986
6042STR-WH		White			$ 1631
6042STRWP-BI	Whirlpool Massage	Biscuit			$ 4377
6042STRWP-LN		Linen			$ 4377
6042STRWP-WH		White			$ 4377

OPTIONS

SKU	Description	MSRP
DDWO-PC	Designer drain waste & overflow kit Available finishes: White **(WH)**, Bone **(BO)**, Polished Chrome **(PC)**, Polished Brass**(PB)**, Brushed Nickel**(BN)**,	$ 288
DDWO-PB	Designer drain waste & overflow kit Available finishes: White **(WH)**, Bone **(BO)**, Polished Chrome **(PC)**, Polished Brass**(PB)**, Brushed Nickel**(BN)**,	$ 288
DDWO-BO	Designer drain waste & overflow kit Available finishes: White **(WH)**, Bone **(BO)**, Polished Chrome **(PC)**, Polished Brass**(PB)**, Brushed Nickel**(BN)**,	$ 288
DDWO-WH		$ 288
DDWO-BN		$ 288

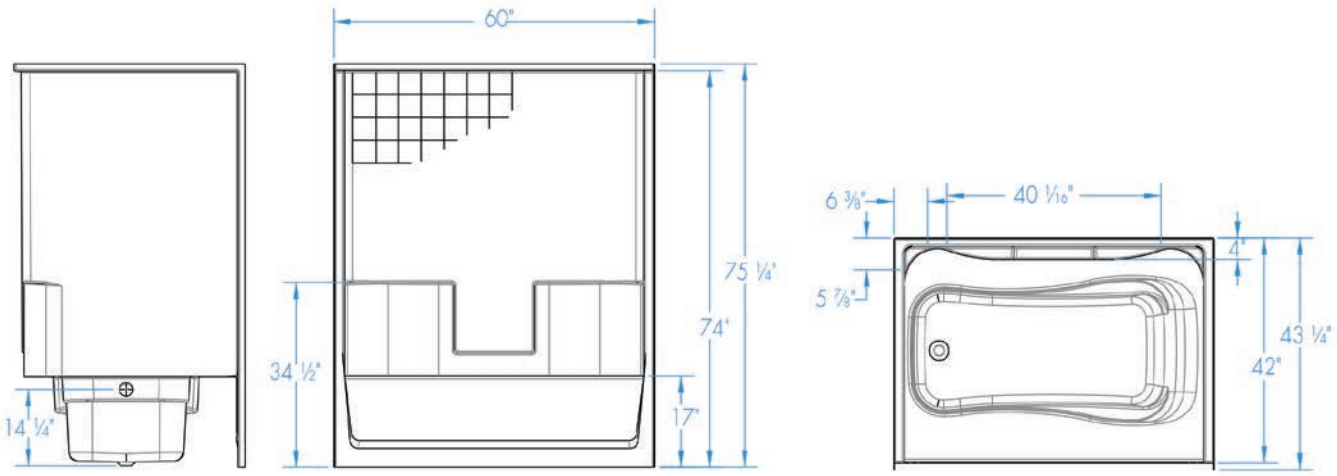
60"
75 ¼"
74"
34 ½"
17"
14 ¼"
6 ⅜"
40 1⁄16"
4"
5 ⅞"
43 ¼"
42"

6042STM AFR



Material : AcrylX™

Min: 50 Gal
Max: 65 Gal

Features

- 1-Piece tub shower
- Smooth square tile wall finish is easy to clean with no messy grout lines
- Molded toiletry shelves
- Ergonomic backrest for bathing comfort
- This AFR unit accommodates the installation of drain, waste and overflow above the floor
- Left or right hand drain
- Slip resistant, textured floor for safety
- AcrylX™ applied acrylic surface
- Whirlpool Features:
- Whirlpool pump
- 6 directional hydrotherapy jets
- Color matched trim
- Available in White and Biscuit/Linen only
- Pneumatic on/off control
- Advanced safety suction

6042STM AFR - PRICING CATEGORY : EH

SKU	System	Color	Configuration	Dimensions & Weight	MSRP
6042STML-AL	Soaker - No System	Almond	Left-hand Drain	60” x 42” x 77” / 160 lb 1524mm x 1067mm x 1956mm / 72.56 kg	$ 1746
6042STML-BI		Biscuit			$ 1746
6042STML-BK		Black			$ 2066
6042STML-BO		Bone			$ 1746
6042STML-LN		Linen			$ 1746
6042STML-ME		Mexican Sand			$ 2066
6042STML-SD		Sandbar			$ 2066
6042STML-ST		Sterling Silver			$ 2066
6042STML-WH		White			$ 1711
6042STMLWP-BI	Whirlpool Massage	Biscuit			$ 4457
6042STMLWP-LN		Linen			$ 4457
6042STMLWP-WH		White			$ 4422
6042STMR-AL	Soaker - No System	Almond	Right-hand Drain		$ 1746
6042STMR-BI		Biscuit			$ 1746
6042STMR-BK		Black			$ 2066

6042STM AFR - PRICING CATEGORY : EH

SKU	System	Color	Configuration	Dimensions & Weight	MSRP
6042STMR-BO	Soaker - No System	Bone	Right-hand Drain	60” x 42” x 77” / 160 lb 1524mm x 1067mm x 1956mm / 72.56 kg	$ 1746
6042STMR-LN		Linen			$ 1746
6042STMR-ME		Mexican Sand			$ 2066
6042STMR-SD		Sandbar			$ 2066
6042STMR-ST		Sterling Silver			$ 2066
6042STMR-WH		White			$ 1711
6042STMRWP-BI	Whirlpool Massage	Biscuit			$ 4457
6042STMRWP-LN		Linen			$ 4457
6042STMRWP-WH		White			$ 4422

OPTIONS

SKU	Description	MSRP
30UPLT	Extra reinforcement for after market accessories installment. Order per wall Reinforcement is applied 30 inches and up **ONLY**,	$ 63
30UPRT	Extra reinforcement for after market accessories installment. Order per wall Reinforcement is applied 30 inches and up **ONLY**,	$ 63
30UPBK	Extra reinforcement for after market accessories installment. Order per wall Reinforcement is applied 30 inches and up **ONLY**,	$ 63
FLATLT	Extra reinforcement for after market accessories installment. Order per wall Reinforcement is applied to flat surface areas.	$ 81
FLATRT	Extra reinforcement for after market accessories installment Order per wall Reinforcement is applied to flat surface areas.	$ 81
FLATBK	Extra reinforcement for after market accessories installment. Order per wall Reinforcement is applied to flat surface areas.	$ 81
SC	Ultra strong honeycomb reinforcement for demanding applications that require additional strength	$ 101
35RKBO	Finish repair kit - Case of 12 Available in White **(WH)**, or Bone **(BO)**,	$ 303
35RKWH		$ 303
5715RSP	Convenient access panel Whirlpool option only	$ 240
PLL2	Pump location is applicable to whirlpools and blower location for air system No charge option Refer to technical drawing for applicable choices	$ 0
PLL3		$ 0

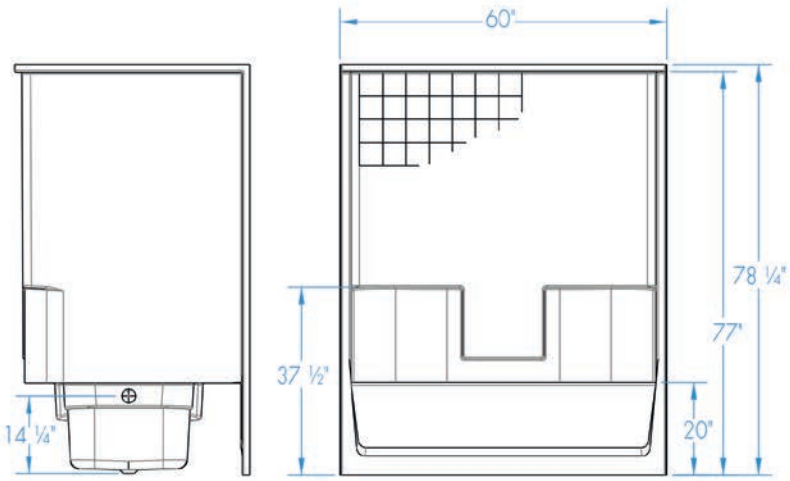

AFR: Allows for above the floor installation of waste, overflow and drainage.

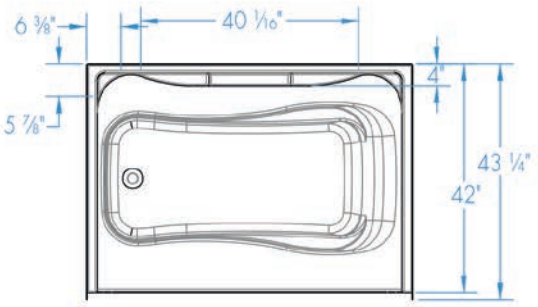

6042STT



Material : AcrylX™

Features

- 1-Piece tub shower
- Simulated subway tile wall design is easy to clean with no messy grout lines
- Ergonomic backrest for bathing comfort
- Streamlined, roomy bathing well
- Left or right hand drain
- Slip resistant, textured floor for safety
- AcrlyX™ applied acrylic surface

6042STT - PRICING CATEGORY : EK

SKU	System	Color	Configuration	Dimensions & Weight	MSRP
6042STTL-AL	Soaker - No System	Almond	Left-hand Drain	60” x 42” x 80” / 167 lb 1524mm x 1067mm x 2032mm / 75.74 kg	$ 1501
6042STTL-BI		Biscuit			$ 1501
6042STTL-BK		Black			$ 1821
6042STTL-BO		Bone			$ 1501
6042STTL-LN		Linen			$ 1501
6042STTL-ME		Mexican Sand			$ 1821
6042STTL-SD		Sandbar			$ 1821
6042STTL-ST		Sterling Silver			$ 1821
6042STTL-WH		White			$ 1466
6042STTR-AL		Almond	Right-hand Drain		$ 1501
6042STTR-BI		Biscuit			$ 1501
6042STTR-BK		Black			$ 1821
6042STTR-BO		Bone			$ 1501
6042STTR-LN		Linen			$ 1501
6042STTR-ME		Mexican Sand			$ 1821
6042STTR-SD		Sandbar			$ 1821
6042STTR-ST		Sterling Silver			$ 1821
6042STTR-WH		White			$ 1466

OPTIONS

SKU	Description	MSRP
DDWO-PC	Designer drain waste & overflow kit Available finishes: White **(WH)**, Bone **(BO)**, Polished Chrome **(PC)**, Polished Brass**(PB)**, Brushed Nickel**(BN)**,	$ 288
DDWO-PB	Designer drain waste & overflow kit Available finishes: White **(WH)**, Bone **(BO)**, Polished Chrome **(PC)**, Polished Brass**(PB)**, Brushed Nickel**(BN)**,	$ 288
DDWO-BO	Designer drain waste & overflow kit Available finishes: White **(WH)**, Bone **(BO)**, Polished Chrome **(PC)**, Polished Brass**(PB)**, Brushed Nickel**(BN)**,	$ 288
DDWO-WH		$ 288
DDWO-BN		$ 288
30UPLT	Extra reinforcement for after market accessories installment. Order per wall Reinforcement is applied 30 inches and up **ONLY**,	$ 63
30UPRT		$ 63
30UPBK		$ 63
FLATLT	Extra reinforcement for after market accessories installment. Order per wall Reinforcement is applied to flat surface areas.	$ 81
FLATRT	Extra reinforcement for after market accessories installment Order per wall Reinforcement is applied to flat surface areas.	$ 81
FLATBK	Extra reinforcement for after market accessories installment. Order per wall Reinforcement is applied to flat surface areas.	$ 81
SC	Ultra strong honeycomb reinforcement for demanding applications that require additional strength	$ 101
35RKBO	Finish repair kit - Case of 12 Available in White **(WH)**, or Bone **(BO)**,	$ 303
35RKWH		$ 303

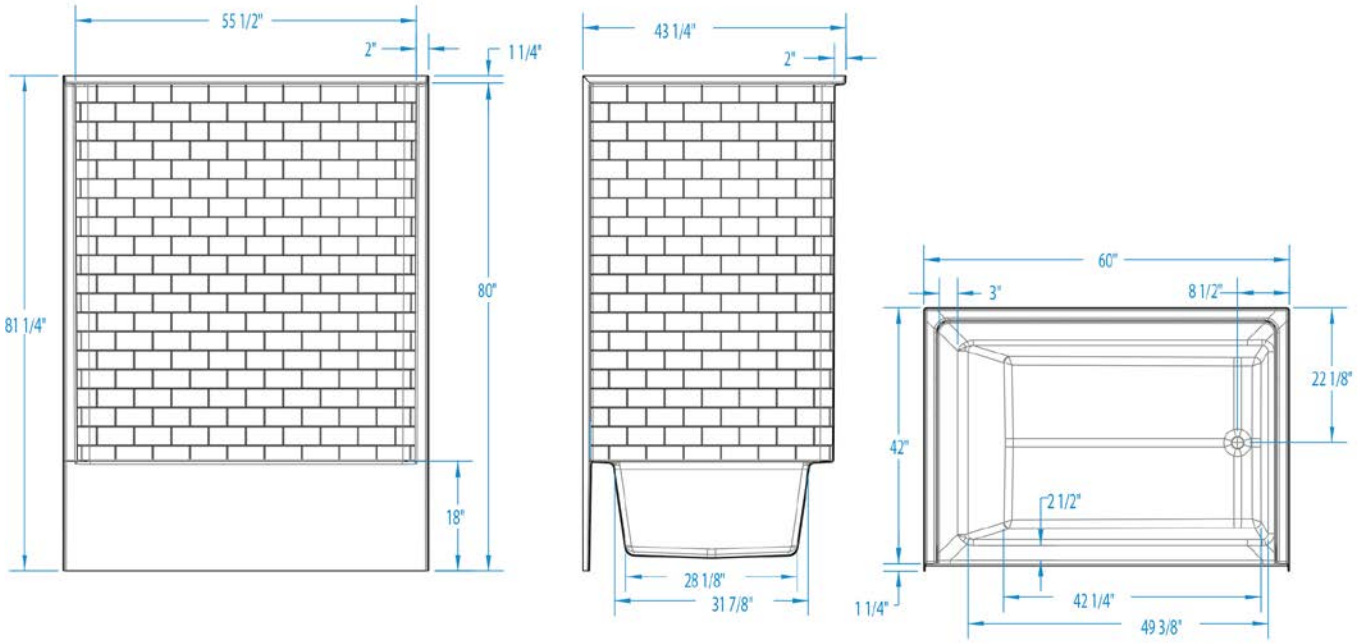
55 1/2"
2"
1 1/4"
81 1/4"
80"
18"
43 1/4"
2"
28 1/8"
31 7/8"
60"
3"
8 1/2"
22 1/8"
42"
2 1/2"
1 1/4"
42 1/4"
49 3/8"

6042STTM AFR





Material : AcrylX™

Features

- 1-Piece tub shower
- Simulated subway tile wall design is easy to clean with no messy grout lines
- Ergonomic backrest for bathing comfort
- Streamlined, roomy bathing well
- This AFR unit accommodates the installation of drain, waste and overflow above the floor
- Left or right hand drain
- Slip resistant, textured floor for safety
- AcrlyX™ applied acrylic surface

6042STTM AFR - PRICING CATEGORY : EK

SKU	System	Color	Configuration	Dimensions & Weight	MSRP
6042STTML-AL	Soaker - No System	Almond	Left-hand Drain	60” x 42” x 83” / 167 lb 1524mm x 1067mm x 2108mm / 75.74 kg	$ 1537
6042STTML-BI		Biscuit			$ 1537
6042STTML-BK		Black			$ 1857
6042STTML-BO		Bone			$ 1537
6042STTML-LN		Linen			$ 1537
6042STTML-ME		Mexican Sand			$ 1857
6042STTML-SD		Sandbar			$ 1857
6042STTML-ST		Sterling Silver			$ 1857
6042STTML-WH		White			$ 1502
6042STTMR-AL		Almond	Right-hand Drain		$ 1537
6042STTMR-BI		Biscuit			$ 1537
6042STTMR-BK		Black			$ 1857
6042STTMR-BO		Bone			$ 1537
6042STTMR-LN		Linen			$ 1537
6042STTMR-ME		Mexican Sand			$ 1857
6042STTMR-SD		Sandbar			$ 1857
6042STTMR-ST		Sterling Silver			$ 1857
6042STTMR-WH		White			$ 1502

OPTIONS

SKU	Description	MSRP
30UPLT	Extra reinforcement for after market accessories installment. Order per wall Reinforcement is applied 30 inches and up **ONLY**,	$ 63
30UPRT	Extra reinforcement for after market accessories installment. Order per wall Reinforcement is applied 30 inches and up **ONLY**,	$ 63
30UPBK	Extra reinforcement for after market accessories installment. Order per wall Reinforcement is applied 30 inches and up **ONLY**,	$ 63
FLATLT	Extra reinforcement for after market accessories installment. Order per wall Reinforcement is applied to flat surface areas.	$ 81
FLATRT	Extra reinforcement for after market accessories installment Order per wall Reinforcement is applied to flat surface areas.	$ 81
FLATBK	Extra reinforcement for after market accessories installment. Order per wall Reinforcement is applied to flat surface areas.	$ 81
SC	Ultra strong honeycomb reinforcement for demanding applications that require additional strength	$ 101
35RKBO	Finish repair kit - Case of 12 Available in White **(WH)**, or Bone **(BO)**,	$ 303
35RKWH		$ 303

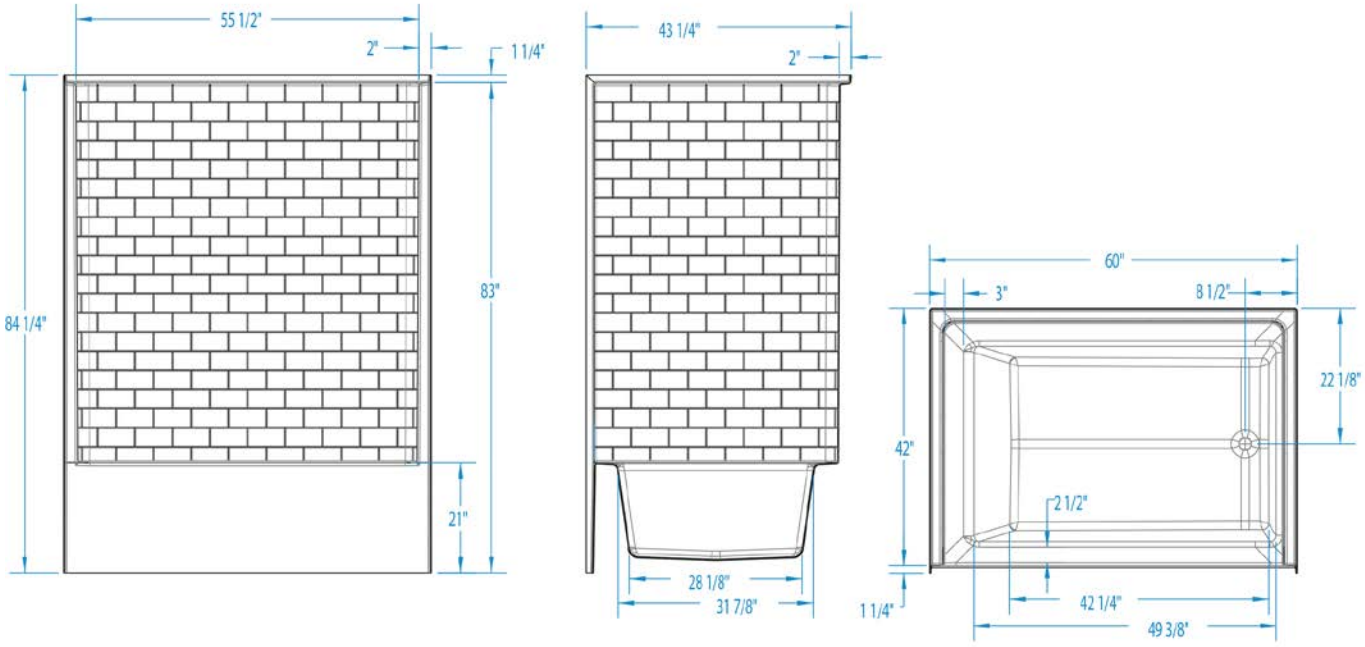
55 1/2"
2"
1 1/4"
84 1/4"
83"
21"
43 1/4"
2"
28 1/8"
31 7/8"
60"
3"
8 1/2"
22 1/8"
42"
2 1/2"
1 1/4"
42 1/4"
49 3/8"

6042STWC



Material : AcrylX™

Min: 40 Gal
Max: 60 Gal

Features

- 1-Piece tub shower
- Smooth square tile wall finish is easy to clean with no messy grout lines
- Molded toiletry shelves
- Ergonomic backrest for bathing comfort
- extra roomy bathing well
- Center rear drain
- Slip resistant, textured floor for safety< for extra strength/li>
- AcrylX™ applied acrylic surface
- Whirlpool Features:
- Whirlpool pump
- 6 directional hydrotherapy jets
- Color matched trim
- Available in White and Biscuit/Linen only
- Pneumatic on/off control
- Advanced safety suction

6042STWC - PRICING CATEGORY : EH

SKU	System	Color	Configuration	Dimensions & Weight	MSRP
6042STWC-AL	Soaker - No System	Almond	Back Center Drain	60” x 42” x 76” / 154 lb 1524mm x 1067mm x 1930mm / 69.84 kg	$ 1666
6042STWC-BI		Biscuit			$ 1666
6042STWC-BK		Black			$ 1986
6042STWC-BO	Whirlpool Massage	Linen			$ 4121
6042STWC-LN	Soaker - No System				$ 1666
6042STWC-ME		Mexican Sand			$ 1986
6042STWC-SD		Sandbar			$ 1986
6042STWC-ST		Sterling Silver			$ 1986
6042STWC-WH		White			$ 1631

OPTIONS

SKU	Description	MSRP
DDWO-PC	Designer drain waste & overflow kit Available finishes: White **(WH)**, Bone **(BO)**, Polished Chrome **(PC)**, Polished Brass**(PB)**, Brushed Nickel**(BN)**,	$ 288
DDWO-PB	Designer drain waste & overflow kit Available finishes: White **(WH)**, Bone **(BO)**, Polished Chrome **(PC)**, Polished Brass**(PB)**, Brushed Nickel**(BN)**,	$ 288

OPTIONS

SKU	Description	MSRP
DDWO-BO	Designer drain waste & overflow kit Available finishes: White **(WH)**, Bone **(BO)**, Polished Chrome **(PC)**, Polished Brass**(PB)**, Brushed Nickel**(BN)**,	$ 288
DDWO-WH		$ 288
DDWO-BN		$ 288
30UPLT	Extra reinforcement for after market accessories installment. Order per wall Reinforcement is applied 30 inches and up **ONLY**,	$ 63
30UPRT		$ 63
30UPBK		$ 63
FLATLT	Extra reinforcement for after market accessories installment. Order per wall Reinforcement is applied to flat surface areas.	$ 81
FLATRT	Extra reinforcement for after market accessories installment Order per wall Reinforcement is applied to flat surface areas.	$ 81
FLATBK	Extra reinforcement for after market accessories installment. Order per wall Reinforcement is applied to flat surface areas.	$ 81
SC	Ultra strong honeycomb reinforcement for demanding applications that require additional strength	$ 101
35RKBO	Finish repair kit - Case of 12 Available in White **(WH)**, or Bone **(BO)**,	$ 303
35RKWH		$ 303
5715RSP	Convenient access panel Whirlpool option only	$ 240
PLL2	Pump location is applicable to whirlpools and blower location for air system No charge option Refer to technical drawing for applicable choices	$ 0

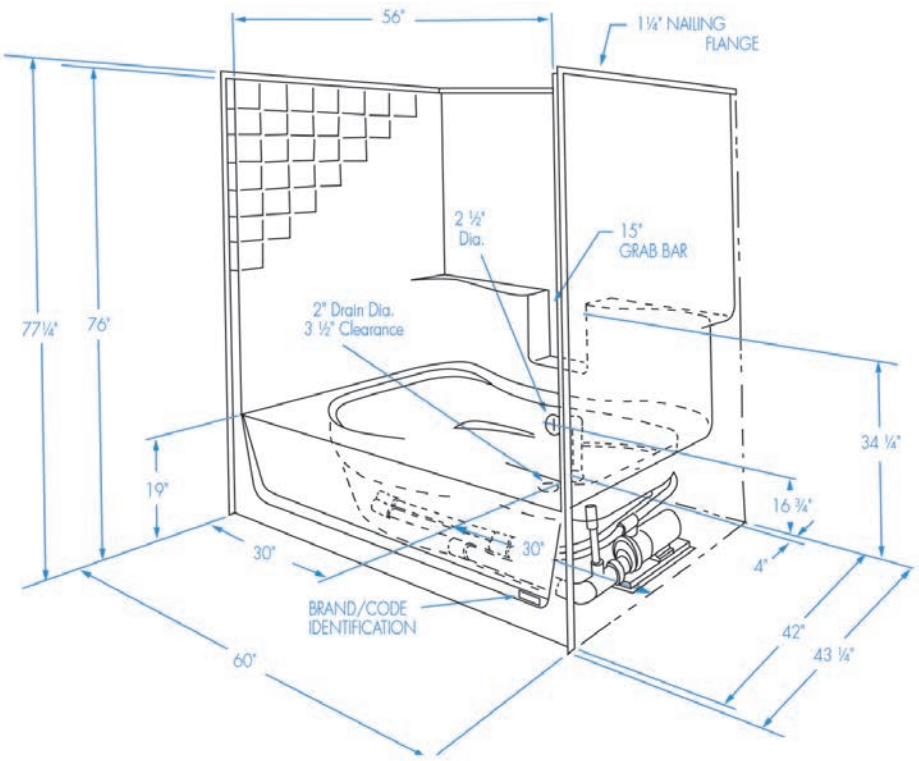
56"
1¼" NAILING FLANGE
2 ½" Dia.
15" GRAB BAR
2" Drain Dia.
3 ½" Clearance
77¼"
76"
19"
34 ¼"
16 ¾"
30"
30"
4"
BRAND/CODE IDENTIFICATION
60"
42"
43 ¼"

60ACTS



Material : Premium Cast Acrylic

Features

- 3-Piece tub shower
- rDecorative back wall
- 3-Piece
- Slip-resistant textured floor for safety
- Premium cast acrylic surface
- Face Pack
- East zone only
- Left or Right hand drain

60ACTS - PRICING CATEGORY : AM

SKU	System	Color	Configuration	Dimensions & Weight	MSRP
60ACTSL-BI	Soaker - No System	Biscuit	Left-hand Drain	60” x 34” x 84” / 175 lb 1524mm x 864mm x 2134mm / 79.37 kg	$ 1675
60ACTSL-WH		White			$ 1640
60ACTSR-BI		Biscuit	Right-hand Drain		$ 1675
60ACTSR-WH		White			$ 1640

OPTIONS

SKU	Description	MSRP
DDWO-PC	Designer drain waste & overflow kit Available finishes: White **(WH)**, Bone **(BO)**, Polished Chrome **(PC)**, Polished Brass**(PB)**, Brushed Nickel**(BN)**,	$ 288
DDWO-PB	Designer drain waste & overflow kit Available finishes: White **(WH)**, Bone **(BO)**, Polished Chrome **(PC)**, Polished Brass**(PB)**, Brushed Nickel**(BN)**,	$ 288
DDWO-BO	Designer drain waste & overflow kit Available finishes: White **(WH)**, Bone **(BO)**, Polished Chrome **(PC)**, Polished Brass**(PB)**, Brushed Nickel**(BN)**,	$ 288
DDWO-WH		$ 288
DDWO-BN		$ 288
DLN1	Ships ready to install - 120 Volt	$ 228

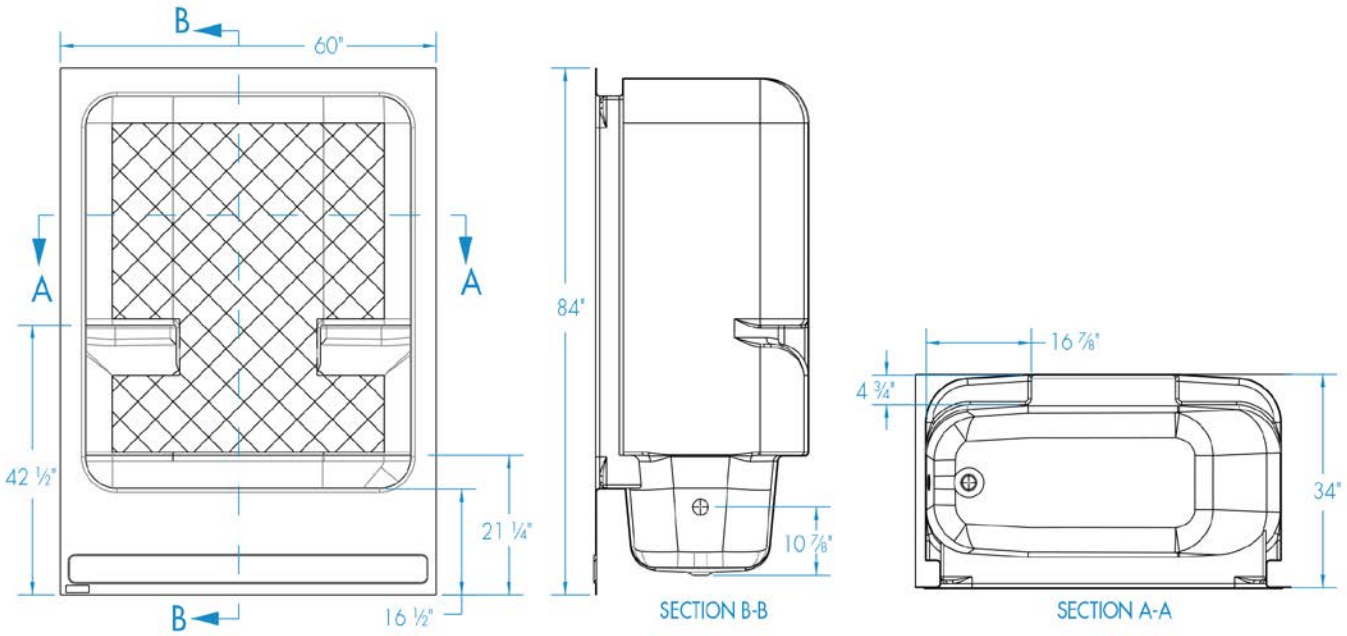
B
60"
A
A
42 ½"
21 ¼"
B
16 ½"
84"
10 ⅞"
SECTION B-B
16 ⅞"
4 ¾"
34"
SECTION A-A

6636STT



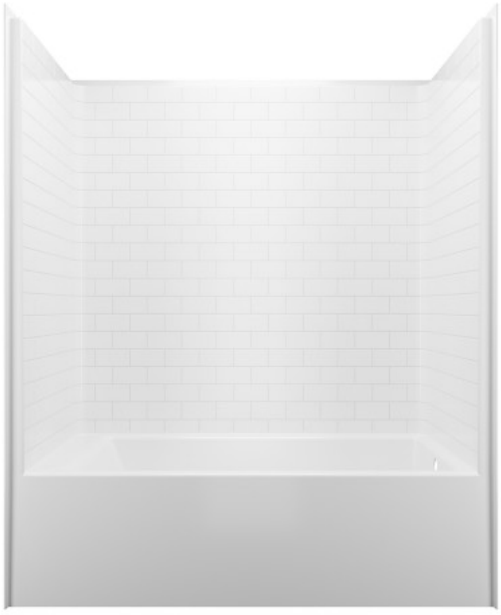

Material : AcrylX™

Features

- 1-Piece tub shower
- Simulated subway tile wall design is easy to clean with no messy grout lines
- Ergonomic backrest for bathing comfort
- Streamlined, roomy bathing well
- Left or right hand drain
- Slip resistant, textured floor for safety
- AcrlyX™ applied acrylic surface

6636STT - PRICING CATEGORY : EK

SKU	System	Color	Configuration	Dimensions & Weight	MSRP
6636STTL-AL	Soaker - No System	Almond	Left-hand Drain	66” x 36” x 80” / 154 lb 1676mm x 914mm x 2032mm / 69.84 kg	$ 1501
6636STTL-BI		Biscuit			$ 1501
6636STTL-BK		Black			$ 1821
6636STTL-BO		Bone			$ 1501
6636STTL-LN		Linen			$ 1501
6636STTL-ME		Mexican Sand			$ 1821
6636STTL-SD		Sandbar			$ 1821
6636STTL-ST		Sterling Silver			$ 1821
6636STTL-WH		White			$ 1466
6636STTR-AL		Almond	Right-hand Drain		$ 1501
6636STTR-BI		Biscuit			$ 1501
6636STTR-BK		Black			$ 1821
6636STTR-BO		Bone			$ 1501
6636STTR-LN		Linen			$ 1501
6636STTR-ME		Mexican Sand			$ 1821
6636STTR-SD		Sandbar			$ 1821
6636STTR-ST		Sterling Silver			$ 1821
6636STTR-WH		White			$ 1466

OPTIONS

SKU	Description	MSRP
DDWO-PC	Designer drain waste & overflow kit Available finishes: White **(WH)**, Bone **(BO)**, Polished Chrome **(PC)**, Polished Brass**(PB)**, Brushed Nickel**(BN)**,	$ 288
DDWO-PB	Designer drain waste & overflow kit Available finishes: White **(WH)**, Bone **(BO)**, Polished Chrome **(PC)**, Polished Brass**(PB)**, Brushed Nickel**(BN)**,	$ 288
DDWO-BO	Designer drain waste & overflow kit Available finishes: White **(WH)**, Bone **(BO)**, Polished Chrome **(PC)**, Polished Brass**(PB)**, Brushed Nickel**(BN)**,	$ 288
DDWO-WH		$ 288
DDWO-BN		$ 288
30UPLT	Extra reinforcement for after market accessories installment. Order per wall Reinforcement is applied 30 inches and up **ONLY**,	$ 63
30UPRT		$ 63
30UPBK		$ 63
FLATLT	Extra reinforcement for after market accessories installment. Order per wall Reinforcement is applied to flat surface areas.	$ 81
FLATRT	Extra reinforcement for after market accessories installment Order per wall Reinforcement is applied to flat surface areas.	$ 81
FLATBK	Extra reinforcement for after market accessories installment. Order per wall Reinforcement is applied to flat surface areas.	$ 81
SC	Ultra strong honeycomb reinforcement for demanding applications that require additional strength	$ 101
35RKBO	Finish repair kit - Case of 12 Available in White **(WH)**, or Bone **(BO)**,	$ 303
35RKWH		$ 303

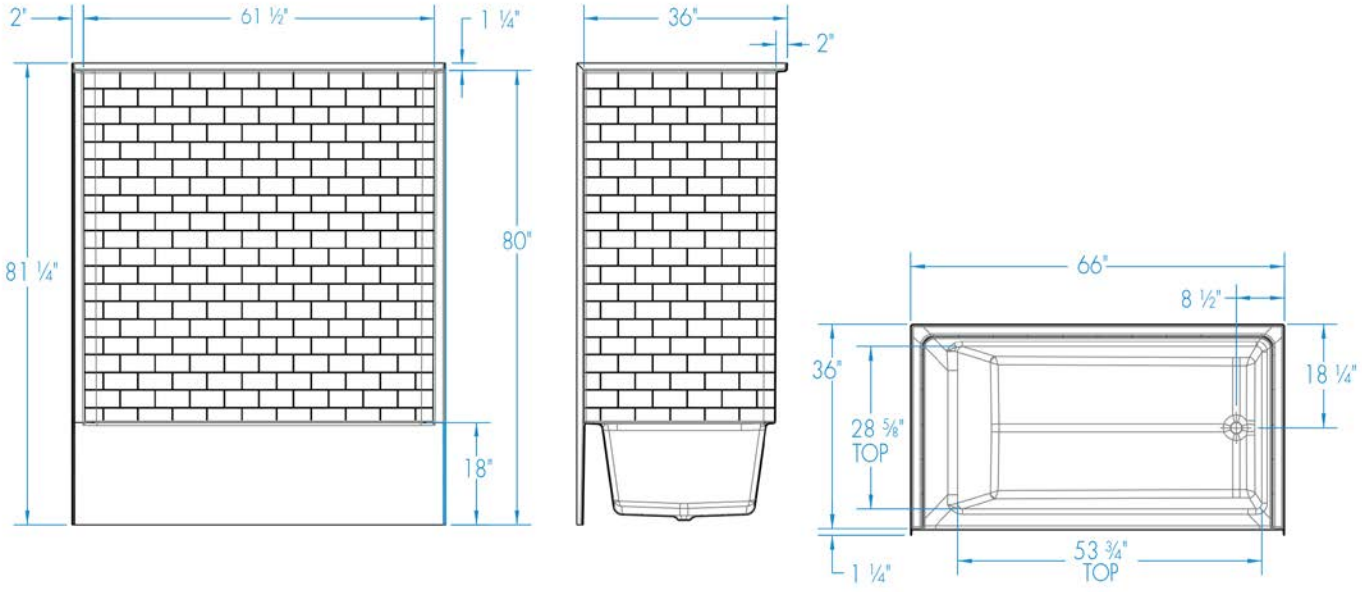
2"
61 ½"
1 ¼"
81 ¼"
80"
18"
36"
2"
66"
8 ½"
36"
28 ⅝"
TOP
18 ¼"
1 ¼"
53 ¾"
TOP

6636STTM AFR



Material : AcrylX™

Features

- 1-Piece tub shower
- Simulated subway tile wall design is easy to clean with no messy grout lines
- Ergonomic backrest for bathing comfort
- Streamlined, roomy bathing well
- This AFR unit accommodates the installation of drain, waste and overflow above the floor
- Left or right hand drain
- Slip resistant, textured floor for safety
- AcrlyX™ applied acrylic surface

6636STTM AFR - PRICING CATEGORY : EK

SKU	System	Color	Configuration	Dimensions & Weight	MSRP
6636STTML-AL	Soaker - No System	Almond	Left-hand Drain	66” x 36” x 84” / 154 lb 1676mm x 914mm x 2134mm / 69.84 kg	$ 1958
6636STTML-BI		Biscuit			$ 1958
6636STTML-BK		Black			$ 2278
6636STTML-BO		Bone			$ 1958
6636STTML-LN		Linen			$ 1958
6636STTML-ME		Mexican Sand			$ 2278
6636STTML-SD		Sandbar			$ 2278
6636STTML-ST		Sterling Silver			$ 2278
6636STTML-WH		White			$ 1923
6636STTMR-AL		Almond	Right-hand Drain		$ 1958
6636STTMR-BI		Biscuit			$ 1958
6636STTMR-BK		Black			$ 2278
6636STTMR-BO		Bone			$ 1958
6636STTMR-LN		Linen			$ 1958
6636STTMR-ME		Mexican Sand			$ 2278
6636STTMR-SD		Sandbar			$ 2278
6636STTMR-ST		Sterling Silver			$ 2278
6636STTMR-WH		White			$ 1923

OPTIONS

SKU	Description	MSRP
30UPLT	Extra reinforcement for after market accessories installment. Order per wall Reinforcement is applied 30 inches and up **ONLY**,	$ 63
30UPRT	Extra reinforcement for after market accessories installment. Order per wall Reinforcement is applied 30 inches and up **ONLY**,	$ 63
30UPBK	Extra reinforcement for after market accessories installment. Order per wall Reinforcement is applied 30 inches and up **ONLY**,	$ 63
FLATLT	Extra reinforcement for after market accessories installment. Order per wall Reinforcement is applied to flat surface areas.	$ 81
FLATRT	Extra reinforcement for after market accessories installment Order per wall Reinforcement is applied to flat surface areas.	$ 81
FLATBK	Extra reinforcement for after market accessories installment. Order per wall Reinforcement is applied to flat surface areas.	$ 81
SC	Ultra strong honeycomb reinforcement for demanding applications that require additional strength	$ 101
35RKBO	Finish repair kit - Case of 12 Available in White **(WH)**, or Bone **(BO)**,	$ 303
35RKWH		$ 303

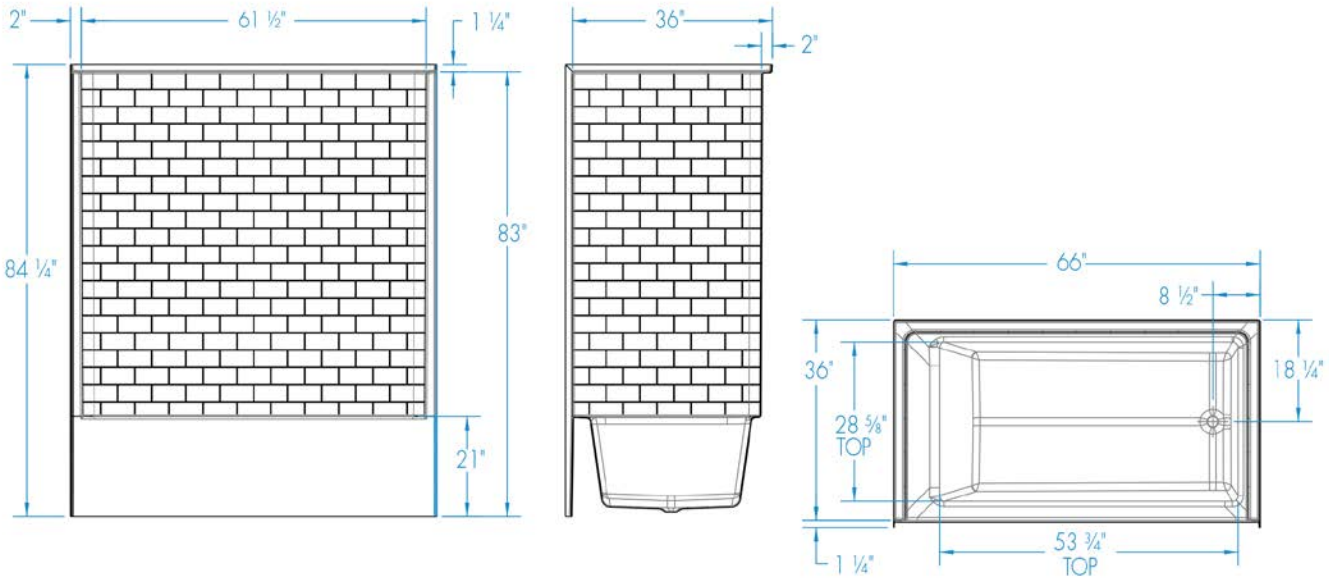
2"
61 ½"
1 ¼"
84 ¼"
83"
21"
36"
2"
66"
8 ½"
36"
18 ¼"
28 ⅝"
TOP
1 ¼"
53 ¾"
TOP

7236ST





Material : AcrylX™

Min: 50 Gal
Max: 63 Gal

Features

- 1-Piece tub shower
- Smooth square tile wall finish is easy to clean with no messy grout lines
- Molded toiletry shelves
- Ergonomic backrest for bathing comfort
- Extra large bathing well
- Left or right hand drain
- Slip resistant, textured floor for safety
- AcrylX™ applied acrylic surface
- Whirlpool Features:
- Whirlpool pump
- 6 directional hydrotherapy jets
- Color matched trim
- Available in White and Biscuit/Linen only
- Pneumatic on/off control
- Advanced safety suction

7236ST - PRICING CATEGORY : EH

SKU	System	Color	Configuration	Dimensions & Weight	MSRP
7236STL-AL	Soaker - No System	Almond	Left-hand Drain	72” x 36” x 76” / 167 lb 1829mm x 914mm x 1930mm / 75.74 kg	$ 1750
7236STL-BI		Biscuit			$ 1750
7236STL-BK		Black			$ 2070
7236STL-LN		Linen			$ 1750
7236STL-ME		Mexican Sand			$ 2070
7236STL-SD		Sandbar			$ 2070
7236STL-ST		Sterling Silver			$ 2070
7236STL-WH		White			$ 1715
7236STLWP-BI	Whirlpool Massage	Biscuit			$ 3796
7236STLWP-WH		White			$ 3761
7236STR-AL	Soaker - No System	Almond	Right-hand Drain		$ 1750
7236STR-BI		Biscuit			$ 1750
7236STR-BK		Black			$ 2070
7236STR-LN		Linen			$ 1750
7236STR-ME		Mexican Sand			$ 2070

7236ST - PRICING CATEGORY : EH

SKU	System	Color	Configuration	Dimensions & Weight	MSRP
7236STR-SD	Soaker - No System	Sandbar	Right-hand Drain	72” x 36” x 76” / 167 lb 1829mm x 914mm x 1930mm / 75.74 kg	$ 2070
7236STR-ST		Sterling Silver			$ 2070
7236STR-WH		White			$ 1715
7236STRWP-BI	Whirlpool Massage	Biscuit			$ 3796
7236STRWP-WH		White			$ 3761

OPTIONS

SKU	Description	MSRP
DDWO-PC	Designer drain waste & overflow kit Available finishes: White **(WH)**, Bone **(BO)**, Polished Chrome **(PC)**, Polished Brass**(PB)**, Brushed Nickel**(BN)**,	$ 288
DDWO-PB	Designer drain waste & overflow kit Available finishes: White **(WH)**, Bone **(BO)**, Polished Chrome **(PC)**, Polished Brass**(PB)**, Brushed Nickel**(BN)**,	$ 288
DDWO-BO	Designer drain waste & overflow kit Available finishes: White **(WH)**, Bone **(BO)**, Polished Chrome **(PC)**, Polished Brass**(PB)**, Brushed Nickel**(BN)**,	$ 288
DDWO-WH		$ 288
DDWO-BN		$ 288
30UPLT	Extra reinforcement for after market accessories installment. Order per wall Reinforcement is applied 30 inches and up **ONLY**,	$ 63
30UPRT		$ 63
30UPBK		$ 63
FLATLT	Extra reinforcement for after market accessories installment. Order per wall Reinforcement is applied to flat surface areas.	$ 81
FLATRT	Extra reinforcement for after market accessories installment Order per wall Reinforcement is applied to flat surface areas.	$ 81
FLATBK	Extra reinforcement for after market accessories installment. Order per wall Reinforcement is applied to flat surface areas.	$ 81
SC	Ultra strong honeycomb reinforcement for demanding applications that require additional strength	$ 101
35RKBO	Finish repair kit - Case of 12 Available in White **(WH)**, or Bone **(BO)**,	$ 303
35RKWH		$ 303
5813RSP	Convenient access panel Whirlpool option only	$ 269
PLL2	Pump location is applicable to whirlpools and blower location for air system No charge option Refer to technical drawing for applicable choices	$ 0
PLL3		$ 0

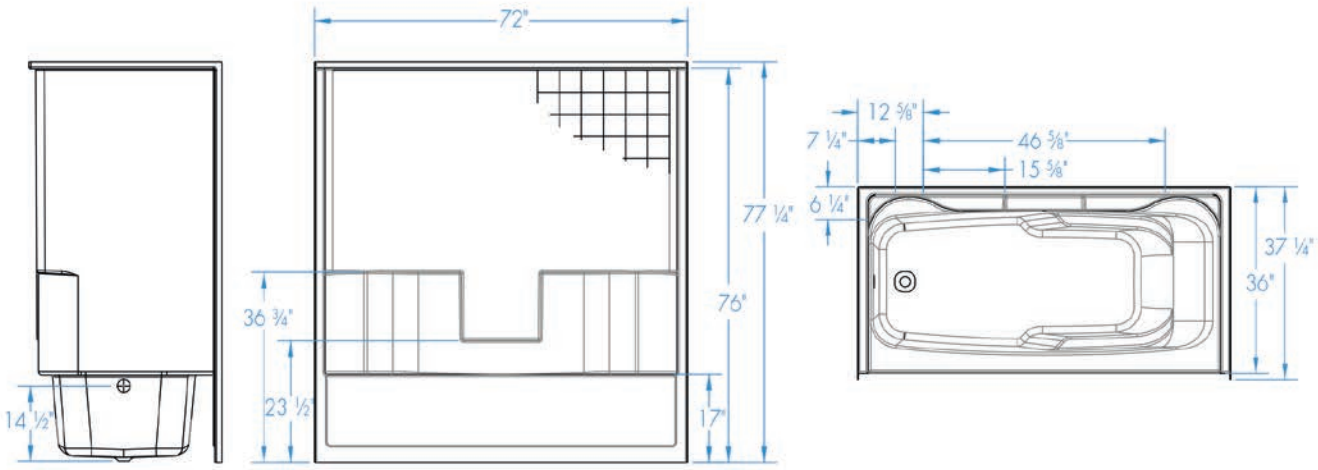
72"
77 ¼"
76"
36 ¾"
23 ½"
17"
14 ½"
12 5⁄8"
7 ¼"
46 5⁄8"
15 5⁄8"
6 ¼"
37 ¼"
36"

DARSEY 10242



Material : AcrylX™

Min: 50 Gal
Max: 67 Gal

Features

- 2-Piece tub and shower suite
- 42 Inch x 42 Inch shower with integral toiletry shelf
- 60 Inch x 42 Inch bathtub with oval sump and integral skirt
- Pony wall and double sided 8-Inch wainscot
- Textured square tile wall finish is easy to clean with no messy grout lines
- Right or left hand tub location
- Ergonomic backrest
- Slip resistant, textured floor for safety
- AcrylX™ applied acrylic surface
- Whirlpool Features:
- Whirlpool pump
- 6 directional hydrotherapy jets
- Color matched trim
- Available in White and Biscuit/Linen only
- Pneumatic on/off control
- Advanced safety suction

DARSEY 10242 - PRICING CATEGORY : EH

SKU	System	Color	Configuration	Dimensions & Weight	MSRP
102422PL-AL	Soaker - No System	Almond	Left-hand Drain	102” x 42” x 79” / 190 lb 2591mm x 1067mm x 2007mm / 86.17 kg	$ 3766
102422PL-BI		Biscuit			$ 3766
102422PL-BK		Black			$ 4086
102422PL-BO		Bone			$ 3766
102422PL-LN		Linen			$ 3766
102422PL-ME		Mexican Sand			$ 4086
102422PL-SD		Sandbar			$ 4086
102422PL-ST		Sterling Silver			$ 4086
102422PL-WH		White			$ 3731
102422PLWP-BI	Whirlpool Massage	Biscuit			$ 5476
102422PLWP-LN		Linen			$ 5476
102422PLWP-WH		White			$ 5441
102422PR-AL	Soaker - No System	Almond	Right-hand Drain		$ 3766
102422PR-BI		Biscuit			$ 3766

DARSEY 10242 - PRICING CATEGORY : EH

SKU	System	Color	Configuration	Dimensions & Weight	MSRP
102422PR-BK	Soaker - No System	Black	Right-hand Drain	102” x 42” x 79” / 190 lb 2591mm x 1067mm x 2007mm / 86.17 kg	$ 4086
102422PR-BO		Bone			$ 3766
102422PR-LN		Linen			$ 3766
102422PR-ME		Mexican Sand			$ 4086
102422PR-SD		Sandbar			$ 4086
102422PR-ST		Sterling Silver			$ 4086
102422PR-WH		White			$ 3731
102422PRWP-BI	Whirlpool Massage	Biscuit			$ 5476
102422PRWP-LN		Linen			$ 5476
102422PRWP-WH		White			$ 5441

OPTIONS

SKU	Description	MSRP
DDWO-PC	Designer drain waste & overflow kit Available finishes: White **(WH)**, Bone **(BO)**, Polished Chrome **(PC)**, Polished Brass**(PB)**, Brushed Nickel**(BN)**,	$ 288
DDWO-PB	Designer drain waste & overflow kit Available finishes: White **(WH)**, Bone **(BO)**, Polished Chrome **(PC)**, Polished Brass**(PB)**, Brushed Nickel**(BN)**,	$ 288
DDWO-BO	Designer drain waste & overflow kit Available finishes: White **(WH)**, Bone **(BO)**, Polished Chrome **(PC)**, Polished Brass**(PB)**, Brushed Nickel**(BN)**,	$ 288
DDWO-WH		$ 288
DDWO-BN		$ 288
35RKBO	Finish repair kit - Case of 12 Available in White **(WH)**, or Bone **(BO)**,	$ 303
35RKWH		$ 303
4816STRP	Convenient access panel Whirlpool option only	$ 240
PLL2	Pump location is applicable to whirlpools and blower location for air system No charge option Refer to technical drawing for applicable choices	$ 0
PLL3		$ 0
PLL4		$ 0
PLL5		$ 0

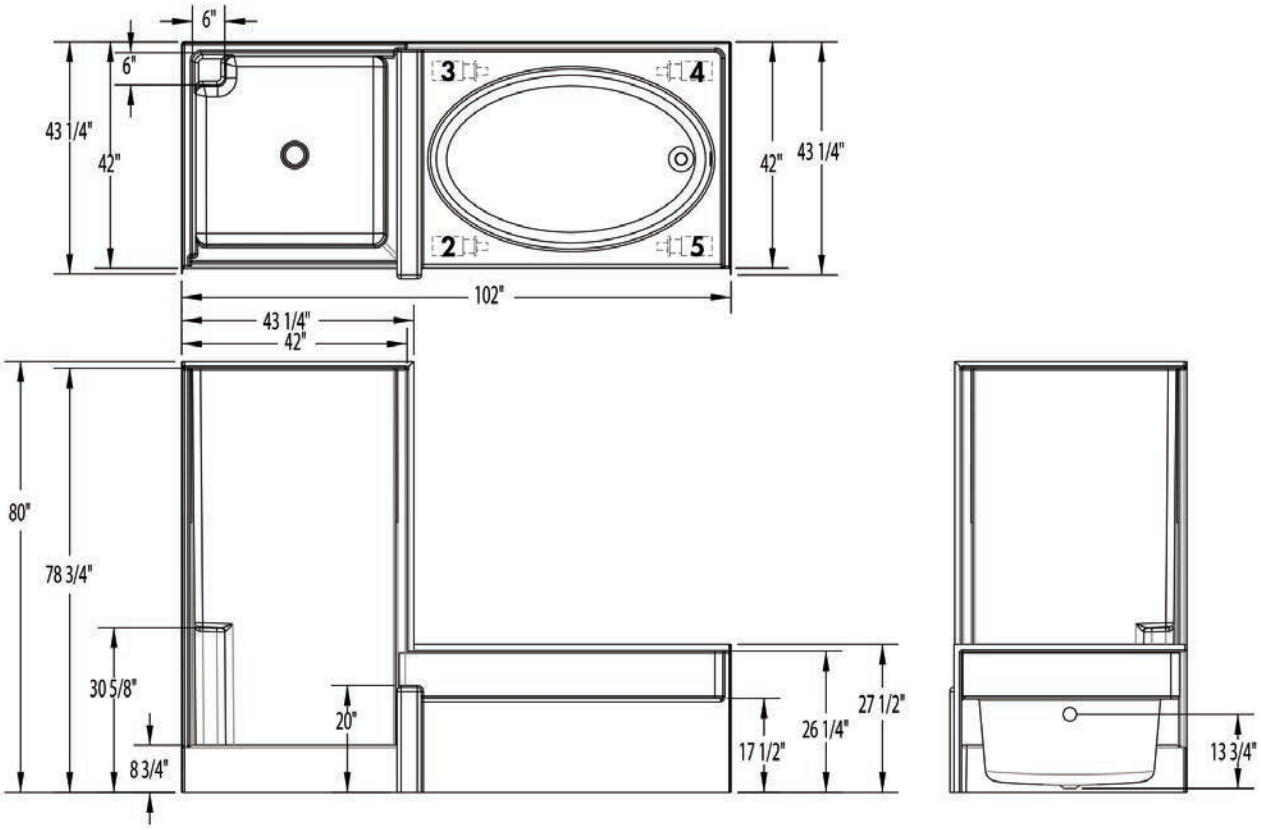
6"
6"
43 1/4"
42"
3
4
2
5
42"
43 1/4"
102"
43 1/4"
42"
80"
78 3/4"
30 5/8"
8 3/4"
20"
17 1/2"
26 1/4"
27 1/2"
13 3/4"

DARSEY 10242S



Material : AcrylX™

Min: 50 Gal
Max: 67 Gal

Features

- 2-Piece tub and shower suite
- 42 Inch x 42 Inch shower with integral toiletry shelf and seat
- 60 Inch x 42 Inch bathtub with oval sump and integral skirt
- Pony wall and double sided 8-Inch wainscot
- Textured square tile wall finish is easy to clean with no messy grout lines
- Right or left hand tub location
- Ergonomic backrest
- Slip resistant, textured floor for safety
- AcrylX™ applied acrylic surface
- Removable access panel (whirlpools only)
- Whirlpool Features:
- Whirlpool pump
- 6 directional hydrotherapy jets
- Color matched trim
- Available in White and Biscuit/Linen only
- Pneumatic on/off control
- Advanced safety suction

DARSEY 10242S - PRICING CATEGORY : EH

SKU	System	Color	Configuration	Dimensions & Weight	MSRP
10242S2PL-AL	Soaker - No System	Almond	Left-hand Drain	102” x 42” x 79” / 240 lb 2591mm x 1067mm x 2007mm / 108.84 kg	$ 3978
10242S2PL-BI		Biscuit			$ 3978
10242S2PL-BK		Black			$ 4298
10242S2PL-BO		Bone			$ 3978
10242S2PL-LN		Linen			$ 3978
10242S2PL-ME		Mexican Sand			$ 4298
10242S2PL-SD		Sandbar			$ 4298
10242S2PL-ST		Sterling Silver			$ 4298
10242S2PL-WH		White			$ 3943
10242S2PLWP-BI	Whirlpool Massage	Biscuit			$ 5608
10242S2PLWP-LN		Linen			$ 5608
10242S2PLWP-WH		White			$ 5573

DARSEY 10242S - PRICING CATEGORY : EH

SKU	System	Color	Configuration	Dimensions & Weight	MSRP
10242S2PR-AL	Soaker - No System	Almond	Right-hand Drain	102” x 42” x 79” / 240 lb 2591mm x 1067mm x 2007mm / 108.84 kg	$ 3978
10242S2PR-BI		Biscuit			$ 3978
10242S2PR-BK		Black			$ 4298
10242S2PR-BO		Bone			$ 3978
10242S2PR-LN		Linen			$ 3978
10242S2PR-ME		Mexican Sand			$ 4298
10242S2PR-SD		Sandbar			$ 4298
10242S2PR-ST		Sterling Silver			$ 4298
10242S2PR-WH		White			$ 3943
10242S2PRWP-BI	Whirlpool Massage	Biscuit			$ 5608
10242S2PRWP-LN		Linen			$ 5608
10242S2PRWP-WH		White			$ 5573

OPTIONS

SKU	Description	MSRP
DDWO-PC	Designer drain waste & overflow kit Available finishes: White **(WH)**, Bone **(BO)**, Polished Chrome **(PC)**, Polished Brass**(PB)**, Brushed Nickel**(BN)**,	$ 288
DDWO-PB	Designer drain waste & overflow kit Available finishes: White **(WH)**, Bone **(BO)**, Polished Chrome **(PC)**, Polished Brass**(PB)**, Brushed Nickel**(BN)**,	$ 288
DDWO-BO	Designer drain waste & overflow kit Available finishes: White **(WH)**, Bone **(BO)**, Polished Chrome **(PC)**, Polished Brass**(PB)**, Brushed Nickel**(BN)**,	$ 288
DDWO-WH		$ 288
DDWO-BN		$ 288
35RKBO	Finish repair kit - Case of 12 Available in White **(WH)**, or Bone **(BO)**,	$ 303
35RKWH		$ 303
4816STRP	Convenient access panel Whirlpool option only	$ 240
PLL2	Pump location is applicable to whirlpools and blower location for air system No charge option Refer to technical drawing for applicable choices	$ 0
PLL3		$ 0
PLL4		$ 0
PLL5		$ 0

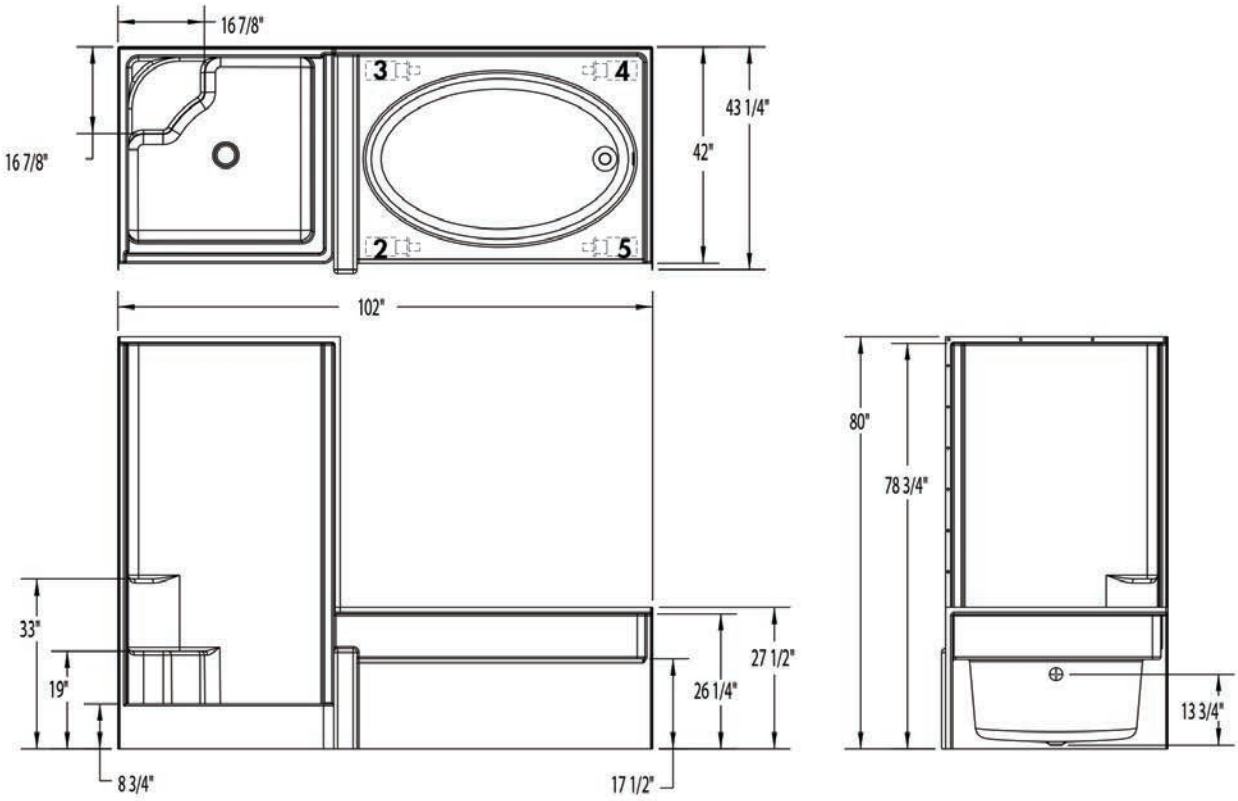
16 7/8"
16 7/8"
3
4
2
5
43 1/4"
42"
102"
33"
19"
8 3/4"
26 1/4"
27 1/2"
17 1/2"
80"
78 3/4"
13 3/4"

DARSEY 10242STNSW





Material : AcrylX™

Min: 50 Gal
Max: 76.5 Gal

Features

- 2-Piece tub and shower suite
- 42 Inch x 42 Inch shower with integral toiletry shelf
- 60 Inch x 43-1/4 Inch bathtub with sleek minimalist design and integral skirt
- Double sided 7-1/2 Inch wainscot
- Simulated subway tile design is easy to clean with no messy grout lines
- Right or left hand tub location
- Ergonomic backrest
- Slip resistant, textured floor for safety
- AcrylX™ applied acrylic surface
- Available in the west zone only
- Whirlpool Features:
- Whirlpool pump
- 6 directional hydrotherapy jets
- Color matched trim
- Available in White and Biscuit/Linen only
- Pneumatic on/off control
- Advanced safety suction

DARSEY 10242STNSW - PRICING CATEGORY : EH

SKU	System	Color	Configuration	Dimensions & Weight	MSRP
10242STNSWL-AL	Soaker - No System	Almond	Left-hand Drain	102” x 43” x 79” / 240 lb 2591mm x 1092mm x 2007mm / 108.84 kg	$ 3978
10242STNSWL-BI		Biscuit			$ 3978
10242STNSWL-BK		Black			$ 4298
10242STNSWL-BO		Bone			$ 3978
10242STNSWL-LN		Linen			$ 3978
10242STNSWL-ME		Mexican Sand			$ 4298
10242STNSWL-SD		Sandbar			$ 4298
10242STNSWL-ST		Sterling Silver			$ 4298
10242STNSWL-WH		White			$ 3943
10242STNSWLWP-BI	Whirlpool Massage	Biscuit			$ 5608
10242STNSWLWP-LN		Linen			$ 5608
10242STNSWLWP-WH		White			$ 5573

DARSEY 10242STNSW - PRICING CATEGORY : EH

SKU	System	Color	Configuration	Dimensions & Weight	MSRP
10242STNSWR-AL	Soaker - No System	Almond	Right-hand Drain	102” x 43” x 79” / 240 lb 2591mm x 1092mm x 2007mm / 108.84 kg	$ 3978
10242STNSWR-BI		Biscuit			$ 3978
10242STNSWR-BK		Black			$ 4298
10242STNSWR-BO		Bone			$ 3978
10242STNSWR-LN		Linen			$ 3978
10242STNSWR-ME		Mexican Sand			$ 4298
10242STNSWR-SD		Sandbar			$ 4298
10242STNSWR-ST		Sterling Silver			$ 4298
10242STNSWR-WH		White			$ 3943
10242STNSWRWP-BI	Whirlpool Massage	Biscuit			$ 5608
10242STNSWRWP-LN		Linen			$ 5608
10242STNSWRWP-WH		White			$ 5573

OPTIONS

SKU	Description	MSRP
DDWO-PC	Designer drain waste & overflow kit Available finishes: White **(WH)**, Bone **(BO)**, Polished Chrome **(PC)**, Polished Brass**(PB)**, Brushed Nickel**(BN)**,	$ 288
DDWO-PB	Designer drain waste & overflow kit Available finishes: White **(WH)**, Bone **(BO)**, Polished Chrome **(PC)**, Polished Brass**(PB)**, Brushed Nickel**(BN)**,	$ 288
DDWO-BO	Designer drain waste & overflow kit Available finishes: White **(WH)**, Bone **(BO)**, Polished Chrome **(PC)**, Polished Brass**(PB)**, Brushed Nickel**(BN)**,	$ 288
DDWO-WH		$ 288
DDWO-BN		$ 288
35RKBO	Finish repair kit - Case of 12 Available in White **(WH)**, or Bone **(BO)**,	$ 303
35RKWH		$ 303
4816STRP	Convenient access panel Whirlpool option only	$ 240
PLL2	Pump location is applicable to whirlpools and blower location for air system No charge option Refer to technical drawing for applicable choices	$ 0
PLL3		$ 0
PLL4		$ 0
PLL5		$ 0

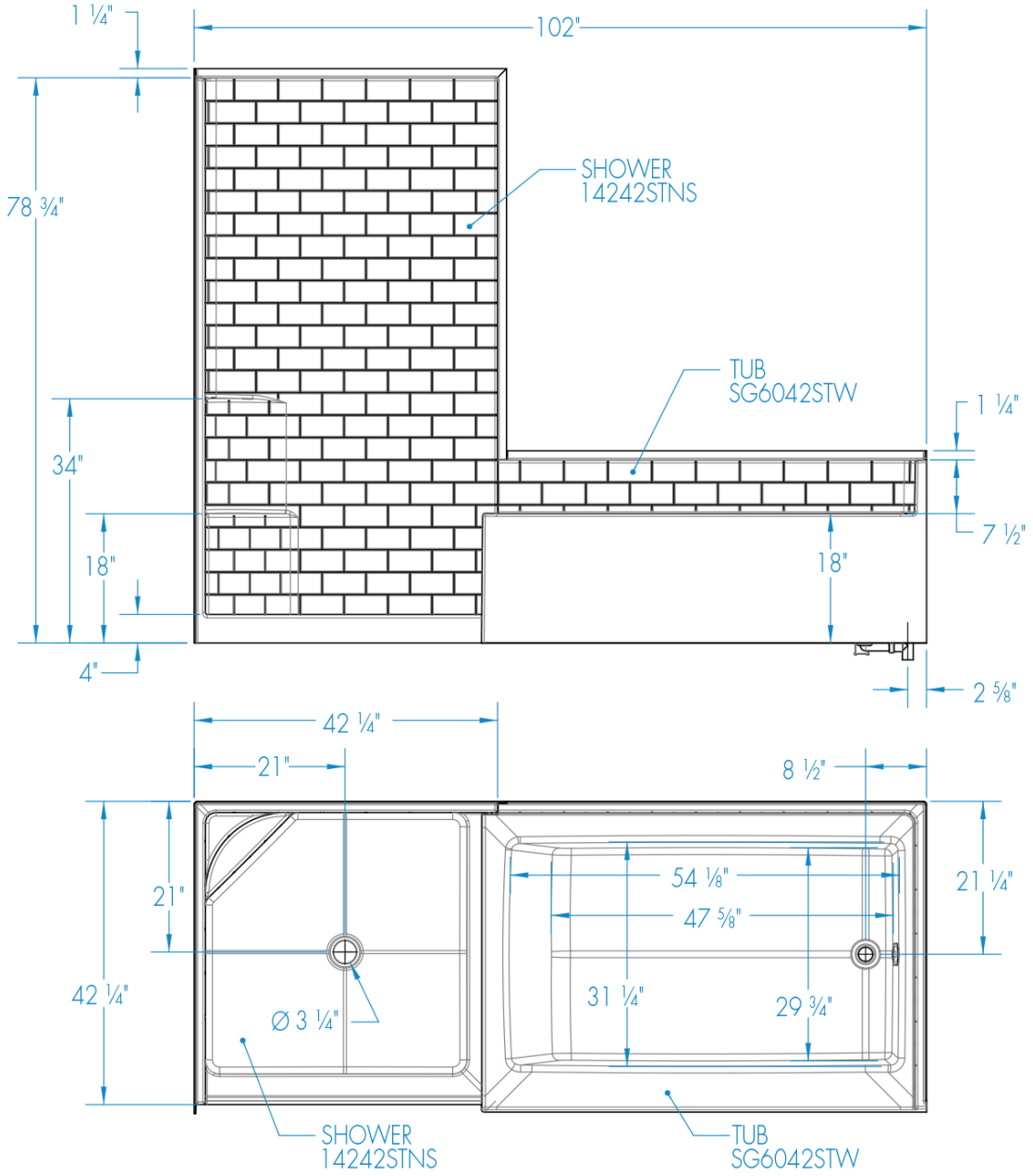
1 ¼"
102"
78 ¾"
SHOWER
14242STNS
TUB
SG6042STW
1 ¼"
34"
7 ½"
18"
18"
4"
2 ⅝"
42 ¼"
21"
8 ½"
21"
54 ⅛"
47 ⅝"
21 ¼"
42 ¼"
31 ¼"
29 ¾"
Ø 3 ¼"
SHOWER
14242STNS
TUB
SG6042STW

DARSEY 10242STSW





Material : AcrylX™

Min: 50 Gal
Max: 76.3 Gal

Features

- 2-Piece tub and shower suite
- 42 Inch x 42 Inch shower with integral toiletry shelf and seat
- 60 Inch x 43-1/4 Inch bathtub with sleek minimalist design and integral skirt
- Double sided 7-1/2 Inch wainscot
- Simulated subway tile design is easy to clean with no messy grout lines
- Right or left hand tub location
- Ergonomic backrest
- Slip resistant, textured floor for safety
- AcrylX™ applied acrylic surface
- Available in the west zone only
- Whirlpool Features:
- Whirlpool pump
- 6 directional hydrotherapy jets
- Color matched trim
- Available in White and Biscuit/Linen only
- Pneumatic on/off control
- Advanced safety suction

DARSEY 10242STSW - PRICING CATEGORY : EH

SKU	System	Color	Configuration	Dimensions & Weight	MSRP
10242STSWL-AL	Soaker - No System	Almond	Left-hand Drain	102” x 43” x 79” / 240 lb 2591mm x 1092mm x 2007mm / 108.84 kg	$ 3978
10242STSWL-BI		Biscuit			$ 3978
10242STSWL-BK		Black			$ 4298
10242STSWL-BO		Bone			$ 3978
10242STSWL-LN		Linen			$ 3978
10242STSWL-ME		Mexican Sand			$ 4298
10242STSWL-SD		Sandbar			$ 4298
10242STSWL-ST		Sterling Silver			$ 4298
10242STSWL-WH		White			$ 3943
10242STSWLWP-BI	Whirlpool Massage	Biscuit			$ 5608
10242STSWLWP-LN		Linen			$ 5608
10242STSWLWP-WH		White			$ 5573

DARSEY 10242STSW - PRICING CATEGORY : EH

SKU	System	Color	Configuration	Dimensions & Weight	MSRP
10242STSWR-AL	Soaker - No System	Almond	Right-hand Drain	102” x 43” x 79” / 240 lb 2591mm x 1092mm x 2007mm / 108.84 kg	$ 3978
10242STSWR-BI		Biscuit			$ 3978
10242STSWR-BK		Black			$ 4298
10242STSWR-BO		Bone			$ 3978
10242STSWR-LN		Linen			$ 3978
10242STSWR-ME		Mexican Sand			$ 4298
10242STSWR-SD		Sandbar			$ 4298
10242STSWR-ST		Sterling Silver			$ 4298
10242STSWR-WH		White			$ 3943
10242STSWRWP-BI	Whirlpool Massage	Biscuit			$ 5608
10242STSWRWP-LN		Linen			$ 5608
10242STSWRWP-WH		White			$ 5573

OPTIONS

SKU	Description	MSRP
DDWO-PC	Designer drain waste & overflow kit Available finishes: White **(WH)**, Bone **(BO)**, Polished Chrome **(PC)**, Polished Brass**(PB)**, Brushed Nickel**(BN)**,	$ 288
DDWO-PB	Designer drain waste & overflow kit Available finishes: White **(WH)**, Bone **(BO)**, Polished Chrome **(PC)**, Polished Brass**(PB)**, Brushed Nickel**(BN)**,	$ 288
DDWO-BO	Designer drain waste & overflow kit Available finishes: White **(WH)**, Bone **(BO)**, Polished Chrome **(PC)**, Polished Brass**(PB)**, Brushed Nickel**(BN)**,	$ 288
DDWO-WH		$ 288
DDWO-BN		$ 288
35RKBO	Finish repair kit - Case of 12 Available in White **(WH)**, or Bone **(BO)**,	$ 303
35RKWH		$ 303
4816STRP	Convenient access panel Whirlpool option only	$ 240
PLL2	Pump location is applicable to whirlpools and blower location for air system No charge option Refer to technical drawing for applicable choices	$ 0
PLL3		$ 0
PLL4		$ 0
PLL5		$ 0

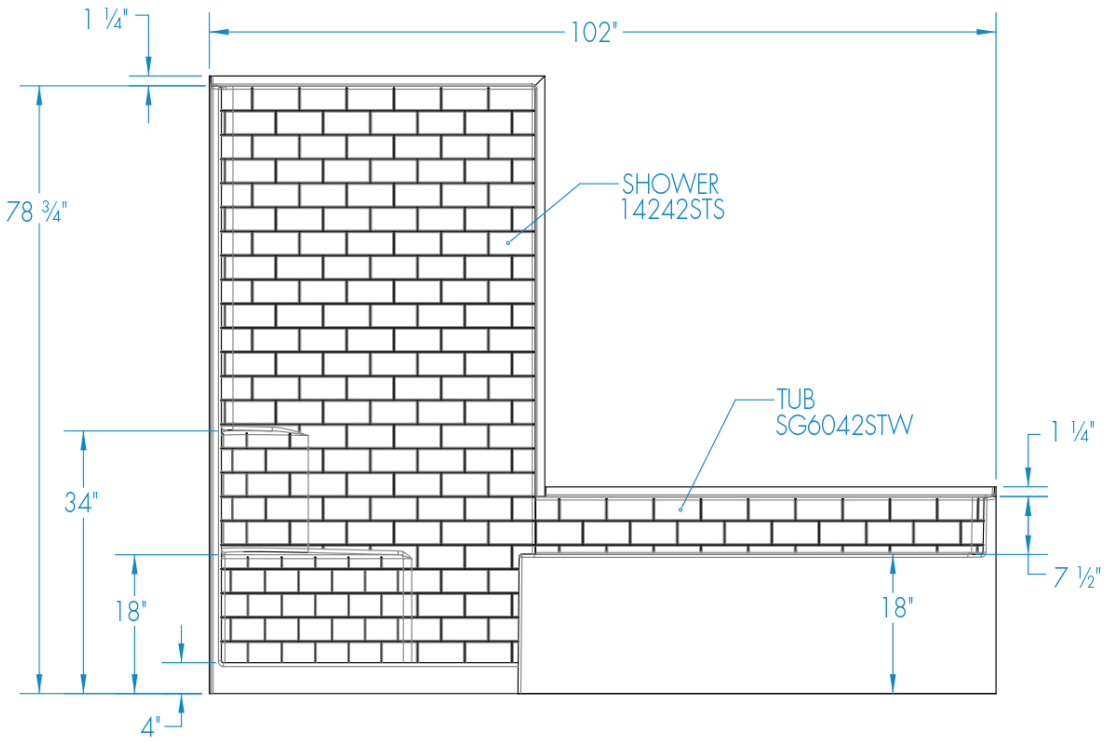
1 ¼"
102"
78 ¾"
SHOWER
14242STS
TUB
SG6042STW
1 ¼"
34"
7 ½"
18"
18"
4"

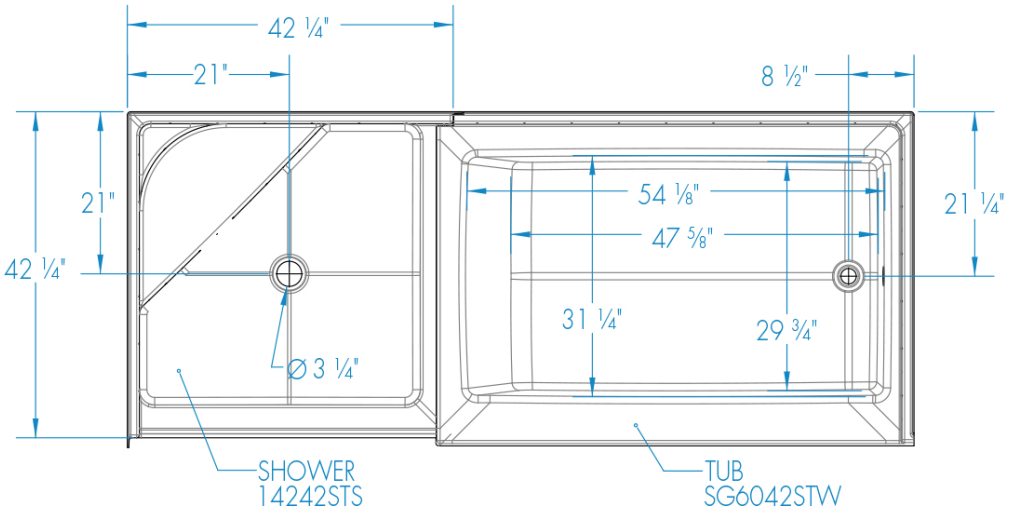
42 ¼"
21"
8 ½"
21"
42 ¼"
54 ⅛"
47 ⅝"
21 ¼"
31 ¼"
29 ¾"
Ø 3 ¼"
SHOWER
14242STS
TUB
SG6042STW

DARSEY 102HG



Material : AcrylX™

Min: 50 Gal
Max: 67 Gal

Features

- 2-Piece tub and shower suite
- 42 Inch x 42 Inch shower with integral toiletry shelf
- 60 Inch x 42 Inch bathtub with hourglass sump and integral skirt
- Double sided 8 Inch wainscot
- Textured square tile wall finish is easy to clean with no messy grout lines
- Right or left hand tub location
- Ergonomic backrest
- Slip resistant, textured floor for safety
- AcrylX™ applied acrylic surface
- Whirlpool Features:
- Whirlpool pump
- 6 directional hydrotherapy jets
- Color matched trim
- Available in White and Biscuit/Linen only
- Pneumatic on/off control
- Advanced safety suction

DARSEY 102HG - PRICING CATEGORY : EH

SKU	System	Color	Configuration	Dimensions & Weight	MSRP
102HG2PL-AL	Soaker - No System	Almond	Left-hand Drain	102” x 42” x 79” / 190 lb 2591mm x 1067mm x 2007mm / 86.17 kg	$ 3966
102HG2PL-BI		Biscuit			$ 3966
102HG2PL-BK		Black			$ 4286
102HG2PL-BO		Bone			$ 3966
102HG2PL-LN		Linen			$ 3966
102HG2PL-ME		Mexican Sand			$ 4286
102HG2PL-SD		Sandbar			$ 4286
102HG2PL-ST		Sterling Silver			$ 4286
102HG2PL-WH		White			$ 3931
102HG2PLWP-BI	Whirlpool Massage	Biscuit			$ 5611
102HG2PLWP-LN		Linen			$ 5611
102HG2PLWP-WH		White			$ 5576
102HG2PR-AL	Soaker - No System	Almond	Right-hand Drain		$ 3966
102HG2PR-BI		Biscuit			$ 3966

DARSEY 102HG - PRICING CATEGORY : EH

SKU	System	Color	Configuration	Dimensions & Weight	MSRP
102HG2PR-BK	Soaker - No System	Black	Right-hand Drain	102” x 42” x 79” / 190 lb 2591mm x 1067mm x 2007mm / 86.17 kg	$ 4286
102HG2PR-BO		Bone			$ 3966
102HG2PR-LN		Linen			$ 3966
102HG2PR-ME		Mexican Sand			$ 4286
102HG2PR-SD		Sandbar			$ 4286
102HG2PR-ST		Sterling Silver			$ 4286
102HG2PR-WH		White			$ 3931
102HG2PRWP-BI	Whirlpool Massage	Biscuit			$ 5611
102HG2PRWP-LN		Linen			$ 5611
102HG2PRWP-WH		White			$ 5576

OPTIONS

SKU	Description	MSRP
DDWO-PC	Designer drain waste & overflow kit Available finishes: White **(WH)**, Bone **(BO)**, Polished Chrome **(PC)**, Polished Brass**(PB)**, Brushed Nickel**(BN)**,	$ 288
DDWO-PB	Designer drain waste & overflow kit Available finishes: White **(WH)**, Bone **(BO)**, Polished Chrome **(PC)**, Polished Brass**(PB)**, Brushed Nickel**(BN)**,	$ 288
DDWO-BO	Designer drain waste & overflow kit Available finishes: White **(WH)**, Bone **(BO)**, Polished Chrome **(PC)**, Polished Brass**(PB)**, Brushed Nickel**(BN)**,	$ 288
DDWO-WH		$ 288
DDWO-BN		$ 288
35RKBO	Finish repair kit - Case of 12 Available in White **(WH)**, or Bone **(BO)**,	$ 303
35RKWH		$ 303
4816STRP	Convenient access panel Whirlpool option only	$ 240
PLL2	Pump location is applicable to whirlpools and blower location for air system No charge option Refer to technical drawing for applicable choices	$ 0
PLL3		$ 0
PLL4		$ 0
PLL5		$ 0

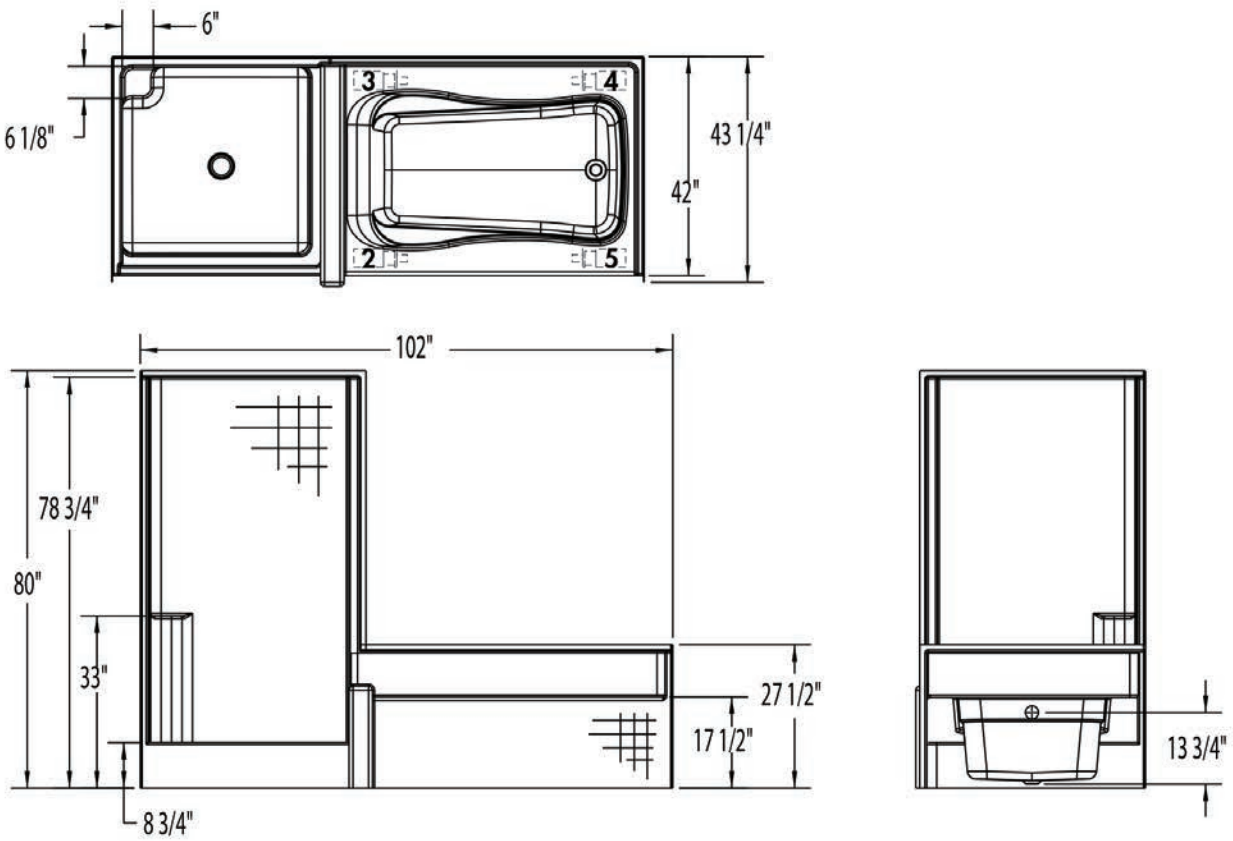
6"
6 1/8"
3
4
2
5
43 1/4"
42"
102"
78 3/4"
80"
33"
8 3/4"
27 1/2"
17 1/2"
13 3/4"

DARSEY 102HGS

Material : AcrylX™

Min: 50 Gal
Max: 67 Gal

Features

- 2-Piece tub and shower suite
- 42 Inch x 42 Inch shower with integral toiletry shelf and seat
- 60 Inch x 42 Inch bathtub with hourglass sump and integral skirt
- Double sided 8 Inch wainscot
- Textured square tile wall finish is easy to clean with no messy grout lines
- Right or left hand tub location
- Ergonomic backrest
- Slip resistant, textured floor for safety
- AcrylX™ applied acrylic surface
- Whirlpool Features:
- Whirlpool pump
- 6 directional hydrotherapy jets
- Color matched trim
- Available in White and Biscuit/Linen only
- Pneumatic on/off control
- Advanced safety suction

DARSEY 102HGS - PRICING CATEGORY : EH

SKU	System	Color	Configuration	Dimensions & Weight	MSRP
102HGS2PL-AL	Soaker - No System	Almond	Left-hand Drain	102” x 42” x 79” / 190 lb 2591mm x 1067mm x 2007mm / 86.17 kg	$ 4097
102HGS2PL-BI		Biscuit			$ 4097
102HGS2PL-BK		Black			$ 4417
102HGS2PL-BO		Bone			$ 4097
102HGS2PL-LN		Linen			$ 4097
102HGS2PL-ME		Mexican Sand			$ 4417
102HGS2PL-SD		Sandbar			$ 4417
102HGS2PL-ST		Sterling Silver			$ 4417
102HGS2PL-WH		White			$ 4062
102HGS2PLWP-BI	Whirlpool Massage	Biscuit			$ 5736
102HGS2PLWP-LN		Linen			$ 5736
102HGS2PLWP-WH		White			$ 5701
102HGS2PR-AL	Soaker - No System	Almond	Right-hand Drain		$ 4097

DARSEY 102HGS - PRICING CATEGORY : EH

SKU	System	Color	Configuration	Dimensions & Weight	MSRP
102HGS2PR-BI	Soaker - No System	Biscuit	Right-hand Drain	102” x 42” x 79” / 190 lb 2591mm x 1067mm x 2007mm / 86.17 kg	$ 4097
102HGS2PR-BK		Black			$ 4417
102HGS2PR-BO		Bone			$ 4097
102HGS2PR-LN		Linen			$ 4097
102HGS2PR-ME		Mexican Sand			$ 4417
102HGS2PR-SD		Sandbar			$ 4417
102HGS2PR-ST		Sterling Silver			$ 4417
102HGS2PR-WH		White			$ 4062
102HGS2PRWP-BI	Whirlpool Massage	Biscuit			$ 5736
102HGS2PRWP-LN		Linen			$ 5736
102HGS2PRWP-WH		White			$ 5701

OPTIONS

SKU	Description	MSRP
DDWO-PC	Designer drain waste & overflow kit Available finishes: White **(WH)**, Bone **(BO)**, Polished Chrome **(PC)**, Polished Brass**(PB)**, Brushed Nickel**(BN)**,	$ 288
DDWO-PB	Designer drain waste & overflow kit Available finishes: White **(WH)**, Bone **(BO)**, Polished Chrome **(PC)**, Polished Brass**(PB)**, Brushed Nickel**(BN)**,	$ 288
DDWO-BO	Designer drain waste & overflow kit Available finishes: White **(WH)**, Bone **(BO)**, Polished Chrome **(PC)**, Polished Brass**(PB)**, Brushed Nickel**(BN)**,	$ 288
DDWO-WH		$ 288
DDWO-BN		$ 288
35RKBO	Finish repair kit - Case of 12 Available in White **(WH)**, or Bone **(BO)**,	$ 303
35RKWH		$ 303
4816STRP	Convenient access panel Whirlpool option only	$ 240
PLL2	Pump location is applicable to whirlpools and blower location for air system No charge option Refer to technical drawing for applicable choices	$ 0
PLL3		$ 0
PLL4		$ 0
PLL5		$ 0

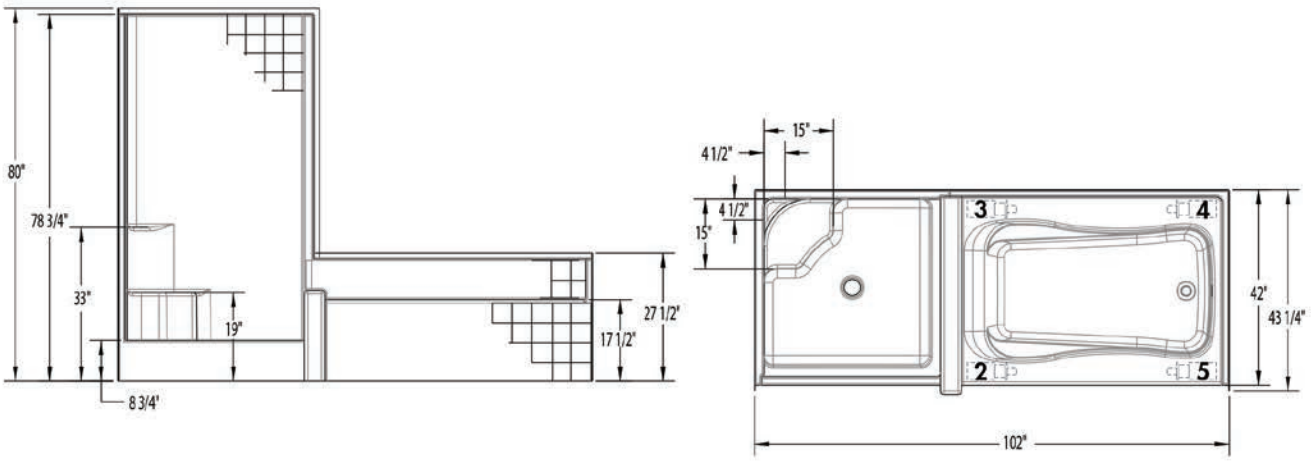
80"
78 3/4"
33"
19"
8 3/4"
27 1/2"
17 1/2"
15"
4 1/2"
4 1/2"
15"
3
4
2
5
42"
43 1/4"
102"

DARSEY 102STA



Material : AcrylX™

Min: 50 Gal
Max: 67 Gal

Features

- 2-Piece tub and shower suite
- 42 Inch x 42 Inch shower with integral toiletry shelf and seat
- 60 Inch x 42 Inch bathtub with oval sump and integral skirt
- Smooth square tile wall finish is easy to clean with no messy grout lines
- Right or left hand tub location
- Ergonomic backrest
- Slip resistant, textured floor for safety
- AcrylX™ applied acrylic surface
- Whirlpool Features:
- Whirlpool pump
- 6 directional hydrotherapy jets
- Color matched trim
- Available in White and Biscuit/Linen only
- Pneumatic on/off control
- Advanced safety suction

DARSEY 102STA - PRICING CATEGORY : EH

SKU	System	Color	Configuration	Dimensions & Weight	MSRP
102STA2PL-AL	Soaker - No System	Almond	Left-hand Drain	102” x 42” x 79” / 240 lb 2591mm x 1067mm x 2007mm / 108.84 kg	$ 3941
102STA2PL-BI		Biscuit			$ 3941
102STA2PL-BK		Black			$ 4261
102STA2PL-BO		Bone			$ 3941
102STA2PL-LN		Linen			$ 3941
102STA2PL-ME		Mexican Sand			$ 4261
102STA2PL-SD		Sandbar			$ 4261
102STA2PL-ST		Sterling Silver			$ 4261
102STA2PL-WH		White			$ 3906
102STA2PLWP-BI	Whirlpool Massage	Biscuit			$ 5643
102STA2PLWP-LN		Linen			$ 5643
102STA2PLWP-WH		White			$ 5608
102STA2PR-AL	Soaker - No System	Almond	Right-hand Drain		$ 3941

DARSEY 102STA - PRICING CATEGORY : EH

SKU	System	Color	Configuration	Dimensions & Weight	MSRP
102STA2PR-BI	Soaker - No System	Biscuit	Right-hand Drain	102” x 42” x 79” / 240 lb 2591mm x 1067mm x 2007mm / 108.84 kg	$ 3941
102STA2PR-BK		Black			$ 4261
102STA2PR-BO		Bone			$ 3941
102STA2PR-LN		Linen			$ 3941
102STA2PR-ME		Mexican Sand			$ 4261
102STA2PR-SD		Sandbar			$ 4261
102STA2PR-ST		Sterling Silver			$ 4261
102STA2PR-WH		White			$ 3906
102STA2PRWP-BI	Whirlpool Massage	Biscuit			$ 5643
102STA2PRWP-LN		Linen			$ 5643
102STA2PRWP-WH		White			$ 5608

OPTIONS

SKU	Description	MSRP
DDWO-PC	Designer drain waste & overflow kit Available finishes: White **(WH)**, Bone **(BO)**, Polished Chrome **(PC)**, Polished Brass**(PB)**, Brushed Nickel**(BN)**,	$ 288
DDWO-PB	Designer drain waste & overflow kit Available finishes: White **(WH)**, Bone **(BO)**, Polished Chrome **(PC)**, Polished Brass**(PB)**, Brushed Nickel**(BN)**,	$ 288
DDWO-BO	Designer drain waste & overflow kit Available finishes: White **(WH)**, Bone **(BO)**, Polished Chrome **(PC)**, Polished Brass**(PB)**, Brushed Nickel**(BN)**,	$ 288
DDWO-WH		$ 288
DDWO-BN		$ 288
35RKBO	Finish repair kit - Case of 12 Available in White **(WH)**, or Bone **(BO)**,	$ 303
35RKWH		$ 303
4816STRP	Convenient access panel Whirlpool option only	$ 240
PLL2	Pump location is applicable to whirlpools and blower location for air system No charge option Refer to technical drawing for applicable choices	$ 0
PLL3		$ 0
PLL4		$ 0
PLL5		$ 0

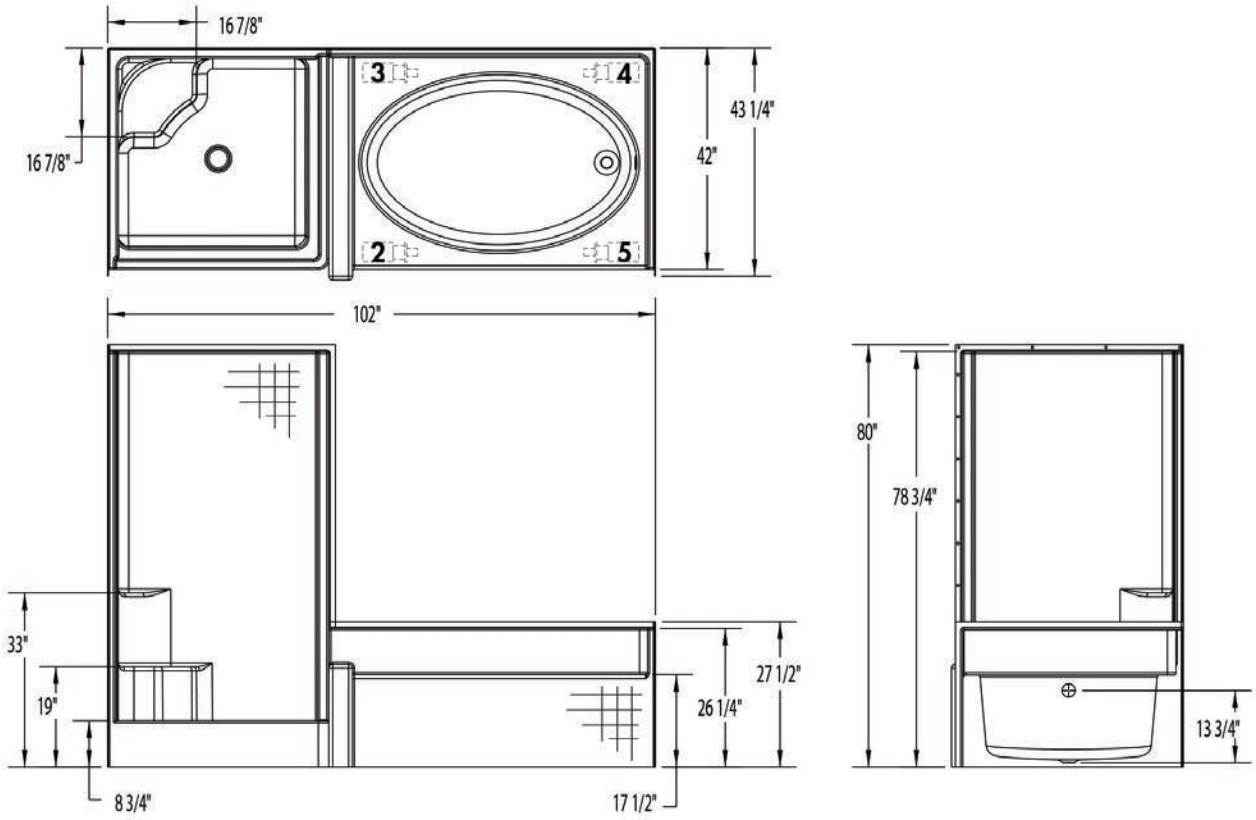
16 7/8"
16 7/8"
3
4
2
5
43 1/4"
42"
102"
33"
19"
8 3/4"
26 1/4"
27 1/2"
17 1/2"
80"
78 3/4"
13 3/4"

DARSEY 11442STNS





Material : AcrylX™

Min: 51 Gal
Max: 74 Gal

Features

- 2-Piece tub and shower suite
- 42 Inch x 42 Inch shower with integral toiletry shelf
- 72 Inch x 42 Inch bathtub with sleek minimalist design and integral skirt
- Pony wall with double sided 7-5/8 Inch wainscot
- Simulated subway tile design is easy to clean with no messy grout lines
- Right or left hand tub location
- Ergonomic backrest
- Slip resistant, textured floor for safety
- AcrylX™ applied acrylic surface
- available in the west zone only
- Whirlpool Features:
- Whirlpool pump
- 6 directional hydrotherapy jets
- Color matched trim
- Available in White and Biscuit/Linen only
- Pneumatic on/off control
- Advanced safety suction

DARSEY 11442STNS - PRICING CATEGORY : EH

SKU	System	Color	Configuration	Dimensions & Weight	MSRP
11442STNSL-AL	Soaker - No System	Almond	Left-hand Drain	114” x 42” x 79” / 250 lb 2896mm x 1067mm x 2007mm / 113.38 kg	$ 4162
11442STNSL-BI		Biscuit			$ 4162
11442STNSL-BK		Black			$ 4482
11442STNSL-BO		Bone			$ 4162
11442STNSL-LN		Linen			$ 4162
11442STNSL-ME		Mexican Sand			$ 4482
11442STNSL-SD		Sandbar			$ 4482
11442STNSL-ST		Sterling Silver			$ 4482
11442STNSL-WH		White			$ 4127
11442STNSLWP-BI	Whirlpool Massage	Biscuit			$ 5733
11442STNSLWP-LN		Linen			$ 5733
11442STNSLWP-WH		White			$ 5698

DARSEY 11442STNS - PRICING CATEGORY : EH

SKU	System	Color	Configuration	Dimensions & Weight	MSRP
11442STNSR-AL	Soaker - No System	Almond	Right-hand Drain	114” x 42” x 79” / 250 lb 2896mm x 1067mm x 2007mm / 113.38 kg	$ 4162
11442STNSR-BI		Biscuit			$ 4162
11442STNSR-BK		Black			$ 4482
11442STNSR-BO		Bone			$ 4162
11442STNSR-LN		Linen			$ 4162
11442STNSR-ME		Mexican Sand			$ 4482
11442STNSR-SD		Sandbar			$ 4482
11442STNSR-ST		Sterling Silver			$ 4482
11442STNSR-WH		White			$ 4127
11442STNSRWP-BI	Whirlpool Massage	Biscuit			$ 5733
11442STNSRWP-LN		Linen			$ 5733
11442STNSRWP-WH		White			$ 5698

OPTIONS

SKU	Description	MSRP
DDWO-PC	Designer drain waste & overflow kit Available finishes: White **(WH)**, Bone **(BO)**, Polished Chrome **(PC)**, Polished Brass**(PB)**, Brushed Nickel**(BN)**,	$ 288
DDWO-PB	Designer drain waste & overflow kit Available finishes: White **(WH)**, Bone **(BO)**, Polished Chrome **(PC)**, Polished Brass**(PB)**, Brushed Nickel**(BN)**,	$ 288
DDWO-BO	Designer drain waste & overflow kit Available finishes: White **(WH)**, Bone **(BO)**, Polished Chrome **(PC)**, Polished Brass**(PB)**, Brushed Nickel**(BN)**,	$ 288
DDWO-WH		$ 288
DDWO-BN		$ 288
35RKBO	Finish repair kit - Case of 12 Available in White **(WH)**, or Bone **(BO)**,	$ 303
35RKWH		$ 303
4816STRP	Convenient access panel Whirlpool option only	$ 240
PLL2	Pump location is applicable to whirlpools and blower location for air system No charge option Refer to technical drawing for applicable choices	$ 0
PLL3		$ 0
PLL4		$ 0
PLL5		$ 0

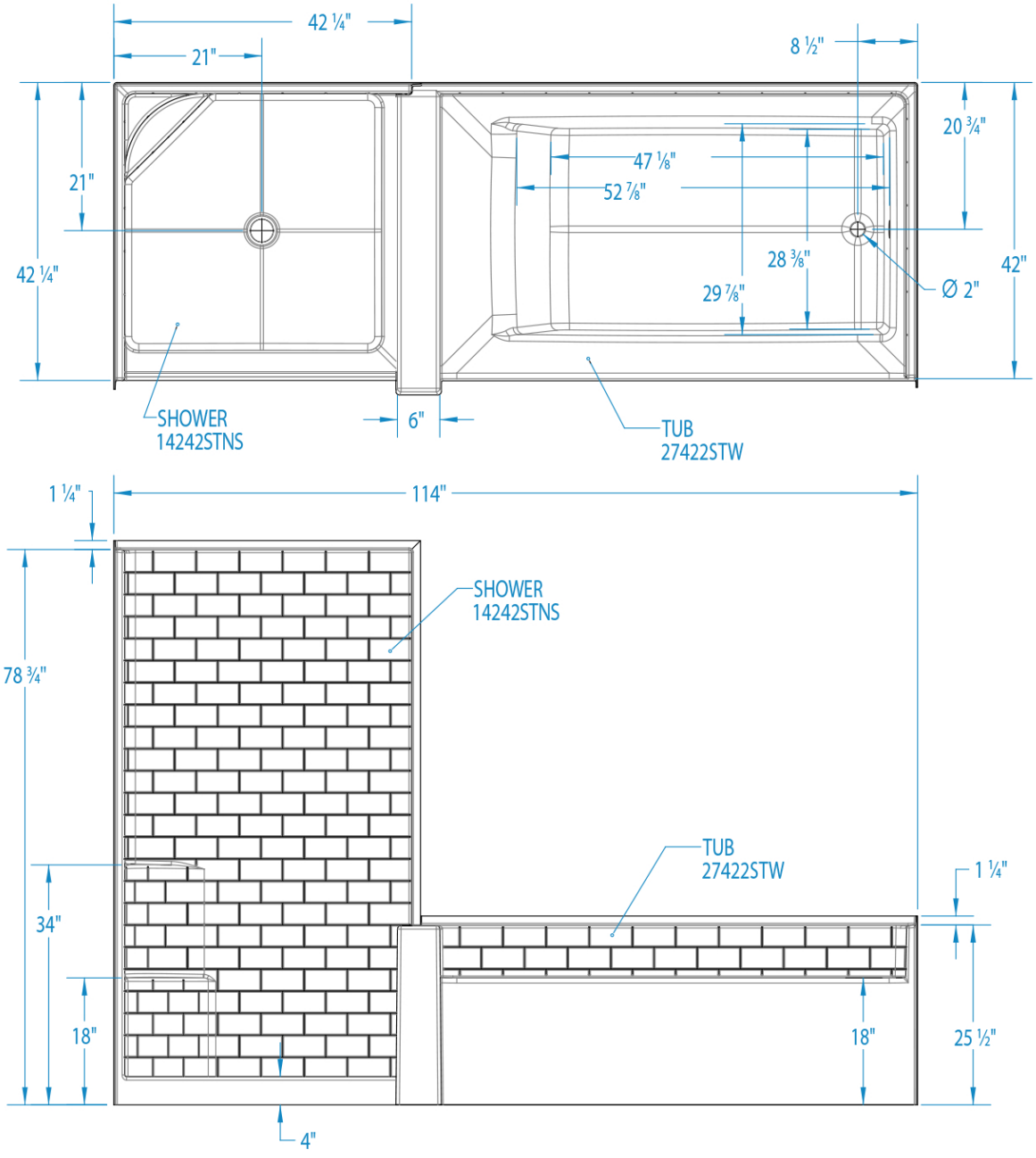
42 ¼"
21"
8 ½"
20 ¾"
21"
47 ⅛"
52 ⅞"
42 ¼"
28 ⅜"
29 ⅞"
Ø 2"
42"
SHOWER
14242STNS
6"
TUB
27422STW
1 ¼"
114"
SHOWER
14242STNS
78 ¾"
TUB
27422STW
1 ¼"
34"
18"
18"
25 ½"
4"

DARSEY 11442STS



Material : AcrylX™

Min: 51 Gal
Max: 74 Gal

Features

- 2-Piece tub and shower suite
- 42 Inch x 42 Inch shower with integral toiletry shelf and seat
- 72 Inch x 42 Inch bathtub with sleek minimalist design and integral skirt
- Double sided 7-5/8 Inch wainscot
- Simulated subway tile design is easy to clean with no messy grout lines
- Right or left hand tub location
- Ergonomic backrest
- Slip resistant, textured floor for safety
- AcrylX™ applied acrylic surface
- Available in the west zone only
- Removable access panel (whirlpool models)
- Whirlpool Features:
- Whirlpool pump
- 6 directional hydrotherapy jets
- Color matched trim
- Available in White and Biscuit/Linen only
- Pneumatic on/off control
- Advanced safety suction

DARSEY 11442STS - PRICING CATEGORY : EH

SKU	System	Color	Configuration	Dimensions & Weight	MSRP
11442STSL-AL	Soaker - No System	Almond	Left-hand Drain	114” x 42” x 79” / 250 lb 2896mm x 1067mm x 2007mm / 113.38 kg	$ 4162
11442STSL-BI		Biscuit			$ 4162
11442STSL-BK		Black			$ 4482
11442STSL-BO		Bone			$ 4162
11442STSL-LN		Linen			$ 4162
11442STSL-ME		Mexican Sand			$ 4482
11442STSL-SD		Sandbar			$ 4482
11442STSL-ST		Sterling Silver			$ 4482
11442STSL-WH		White			$ 4127
11442STSLWP-BI	Whirlpool Massage	Biscuit			$ 5733
11442STSLWP-LN		Linen			$ 5733

DARSEY 11442STS - PRICING CATEGORY : EH

SKU	System	Color	Configuration	Dimensions & Weight	MSRP
11442STSLWP-WH	Whirlpool Massage	White	Left-hand Drain	114” x 42” x 79” / 250 lb 2896mm x 1067mm x 2007mm / 113.38 kg	$ 5698
11442STSR-AL	Soaker - No System	Almond	Right-hand Drain		$ 4162
11442STSR-BI		Biscuit			$ 4162
11442STSR-BK		Black			$ 4482
11442STSR-BO		Bone			$ 4162
11442STSR-LN		Linen			$ 4162
11442STSR-ME		Mexican Sand			$ 4482
11442STSR-SD		Sandbar			$ 4482
11442STSR-ST		Sterling Silver			$ 4482
11442STSR-WH		White			$ 4127
11442STSRWP-BI	Whirlpool Massage	Biscuit			$ 5733
11442STSRWP-WH		White			$ 5698

OPTIONS

SKU	Description	MSRP
DDWO-PC	Designer drain waste & overflow kit Available finishes: White **(WH)**, Bone **(BO)**, Polished Chrome **(PC)**, Polished Brass**(PB)**, Brushed Nickel**(BN)**,	$ 288
DDWO-PB	Designer drain waste & overflow kit Available finishes: White **(WH)**, Bone **(BO)**, Polished Chrome **(PC)**, Polished Brass**(PB)**, Brushed Nickel**(BN)**,	$ 288
DDWO-BO	Designer drain waste & overflow kit Available finishes: White **(WH)**, Bone **(BO)**, Polished Chrome **(PC)**, Polished Brass**(PB)**, Brushed Nickel**(BN)**,	$ 288
DDWO-WH		$ 288
DDWO-BN		$ 288
35RKBO	Finish repair kit - Case of 12 Available in White **(WH)**, or Bone **(BO)**,	$ 303
35RKWH		$ 303
4816STRP	Convenient access panel Whirlpool option only	$ 240
PLL2	Pump location is applicable to whirlpools and blower location for air system No charge option Refer to technical drawing for applicable choices	$ 0
PLL3		$ 0
PLL4		$ 0
PLL5		$ 0

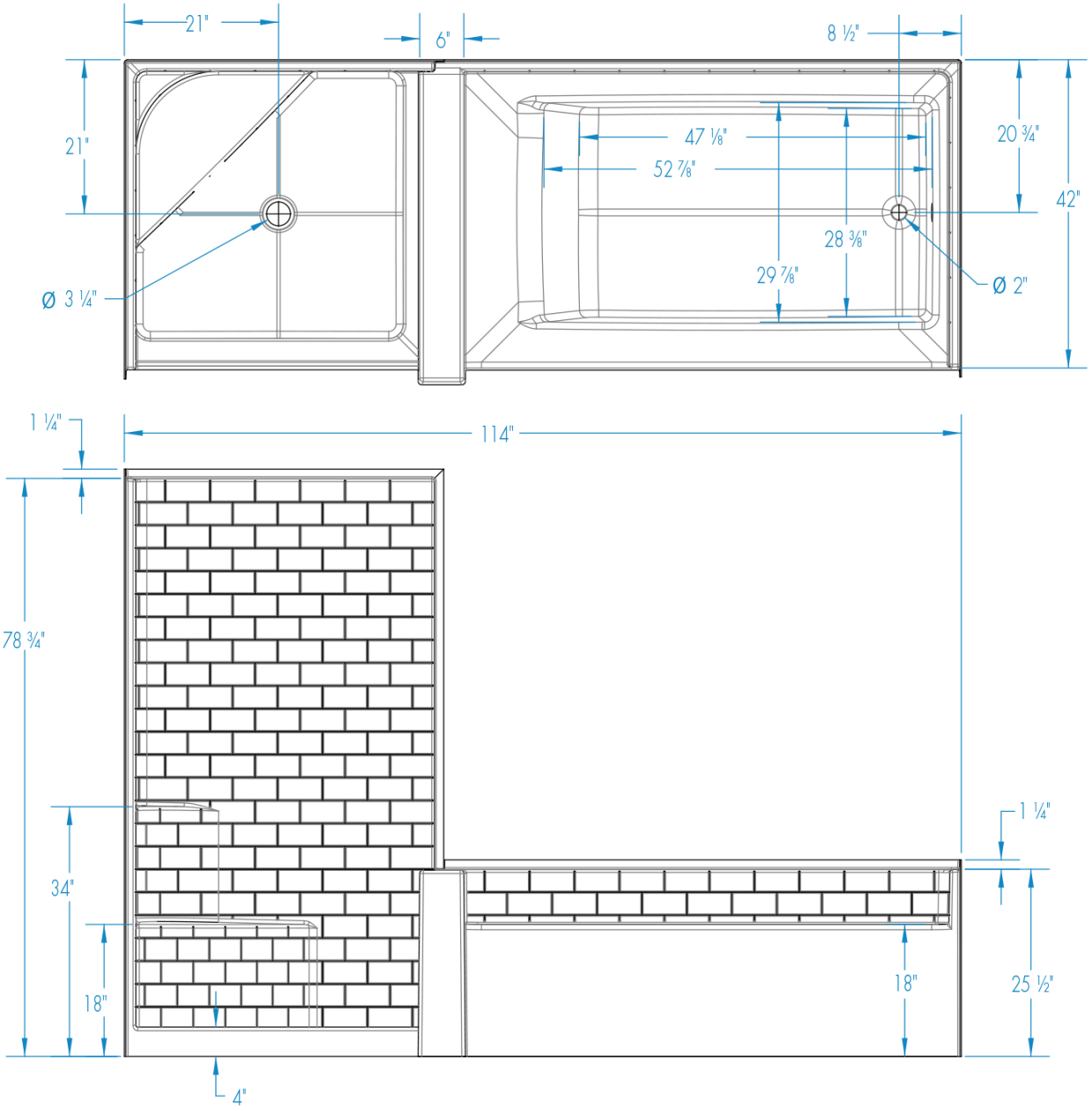
21"
6"
8 ½"
21"
47 ⅛"
52 ⅞"
20 ¾"
42"
28 ⅜"
29 ⅞"
Ø 3 ¼"
Ø 2"
1 ¼"
114"
78 ¾"
34"
18"
4"
1 ¼"
18"
25 ½"

DARSEY 114HG



Material : AcrylX™

Min: 56 Gal
Max: 67 Gal

Features

- 2-Piece tub and shower suite
- 42 Inch x 42 Inch shower with integral toiletry shelf
- 72 Inch x 42 Inch bathtub with hourglass sump and integral skirt
- Double sided 8 Inch wainscot
- Textured square tile wall finish is easy to clean with no messy grout lines
- Right or left hand tub location
- Ergonomic backrest
- Slip resistant, textured floor for safety
- AcrylX™ applied acrylic surface
- Whirlpool Features:
- Whirlpool pump
- 6 directional hydrotherapy jets
- Color matched trim
- Available in White and Biscuit/Linen only
- Pneumatic on/off control
- Advanced safety suction

DARSEY 114HG - PRICING CATEGORY : EH

SKU	System	Color	Configuration	Dimensions & Weight	MSRP
114HG2PL-AL	Soaker - No System	Almond	Left-hand Drain	114” x 42” x 79” / 240 lb 2896mm x 1067mm x 2007mm / 108.84 kg	$ 4033
114HG2PL-BI		Biscuit			$ 4033
114HG2PL-BK		Black			$ 4353
114HG2PL-BO		Bone			$ 4033
114HG2PL-LN		Linen			$ 4033
114HG2PL-ME		Mexican Sand			$ 4353
114HG2PL-SD		Sandbar			$ 4353
114HG2PL-ST		Sterling Silver			$ 4353
114HG2PL-WH		White			$ 3998
114HG2PLWP-BI	Whirlpool Massage	Biscuit			$ 5802
114HG2PLWP-LN		Linen			$ 5802
114HG2PLWP-WH		White			$ 5767
114HG2PR-AL	Soaker - No System	Almond	Right-hand Drain		$ 4033

DARSEY 114HG - PRICING CATEGORY : EH

SKU	System	Color	Configuration	Dimensions & Weight	MSRP
114HG2PR-BI	Soaker - No System	Biscuit	Right-hand Drain	114” x 42” x 79” / 240 lb 2896mm x 1067mm x 2007mm / 108.84 kg	$ 4033
114HG2PR-BK		Black			$ 4353
114HG2PR-BO		Bone			$ 4033
114HG2PR-LN		Linen			$ 4033
114HG2PR-ME		Mexican Sand			$ 4353
114HG2PR-SD		Sandbar			$ 4353
114HG2PR-ST		Sterling Silver			$ 4353
114HG2PR-WH		White			$ 3998
114HG2PRWP-BI	Whirlpool Massage	Biscuit			$ 5802
114HG2PRWP-LN		Linen			$ 5802
114HG2PRWP-WH		White			$ 5767

OPTIONS

SKU	Description	MSRP
DDWO-PC	Designer drain waste & overflow kit Available finishes: White **(WH)**, Bone **(BO)**, Polished Chrome **(PC)**, Polished Brass**(PB)**, Brushed Nickel**(BN)**,	$ 288
DDWO-PB	Designer drain waste & overflow kit Available finishes: White **(WH)**, Bone **(BO)**, Polished Chrome **(PC)**, Polished Brass**(PB)**, Brushed Nickel**(BN)**,	$ 288
DDWO-BO	Designer drain waste & overflow kit Available finishes: White **(WH)**, Bone **(BO)**, Polished Chrome **(PC)**, Polished Brass**(PB)**, Brushed Nickel**(BN)**,	$ 288
DDWO-WH		$ 288
DDWO-BN		$ 288
35RKBO	Finish repair kit - Case of 12 Available in White **(WH)**, or Bone **(BO)**,	$ 303
35RKWH		$ 303
4816STRP	Convenient access panel Whirlpool option only	$ 240
PLL2	Pump location is applicable to whirlpools and blower location for air system No charge option Refer to technical drawing for applicable choices	$ 0
PLL3		$ 0
PLL4		$ 0
PLL5		$ 0

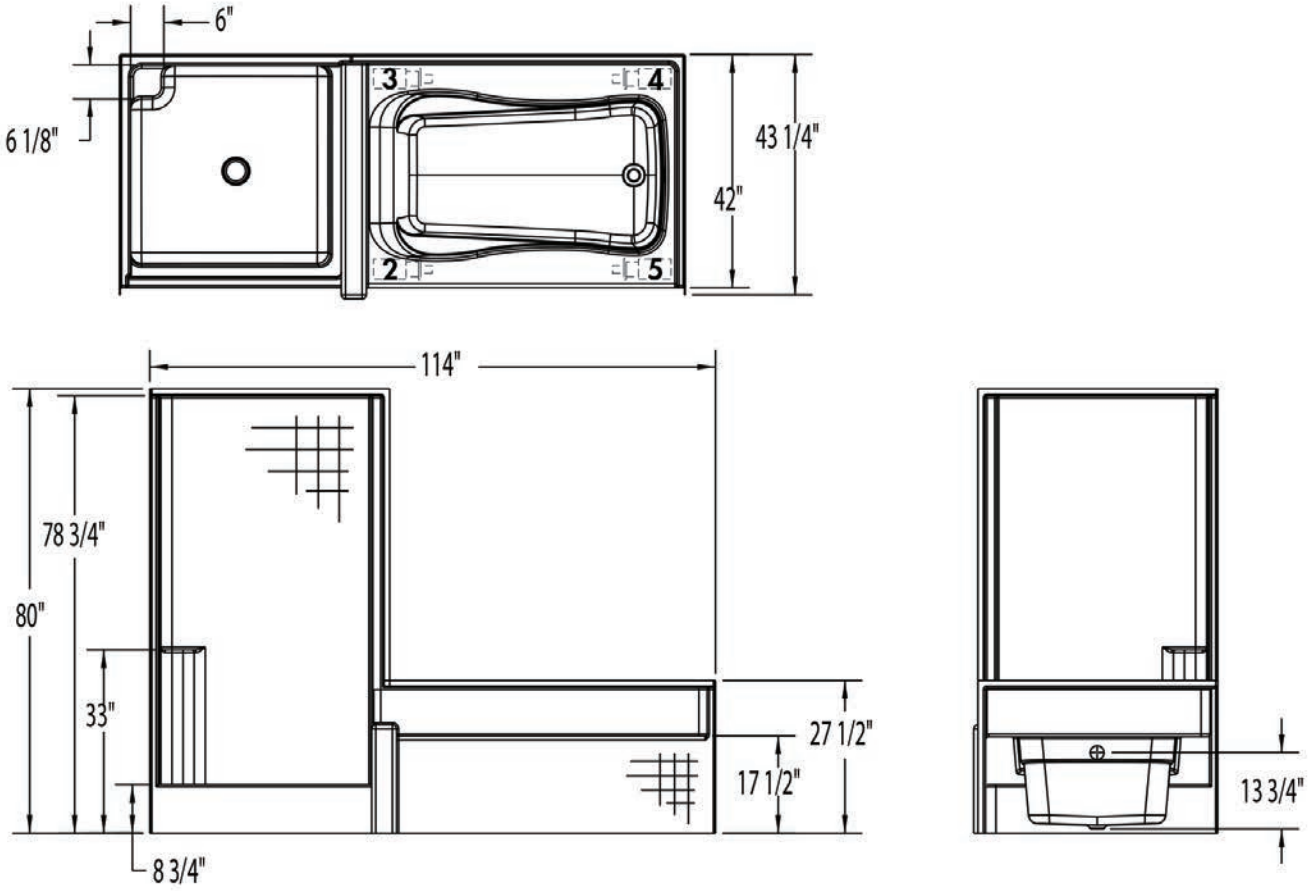
6"
6 1/8"
3
4
2
5
43 1/4"
42"
114"
78 3/4"
80"
33"
8 3/4"
27 1/2"
17 1/2"
13 3/4"

DARSEY 114HGS

Material : AcrylX™

Min: 56 Gal
Max: 67 Gal

Features

- 2-Piece tub and shower suite
- 42 Inch x 42 Inch shower with integral toiletry shelf and seat
- 72 Inch x 42 Inch bathtub with hourglass sump and integral skirt
- Double sided 8 Inch wainscot
- Textured square tile wall finish is easy to clean with no messy grout lines
- Right or left hand tub location
- Ergonomic backrest
- Slip resistant, textured floor for safety
- AcrylX™ applied acrylic surface
- Whirlpool Features:
- Whirlpool pump
- 6 directional hydrotherapy jets
- Color matched trim
- Available in White and Biscuit/Linen only
- Pneumatic on/off control
- Advanced safety suction

DARSEY 114HGS - PRICING CATEGORY : EH

SKU	System	Color	Configuration	Dimensions & Weight	MSRP
114HGS2PL-AL	Soaker - No System	Almond	Left-hand Drain	114” x 42” x 79” / 240 lb 2896mm x 1067mm x 2007mm / 108.84 kg	$ 4162
114HGS2PL-BI		Biscuit			$ 4162
114HGS2PL-BK		Black			$ 4482
114HGS2PL-BO		Bone			$ 4162
114HGS2PL-LN		Linen			$ 4162
114HGS2PL-ME		Mexican Sand			$ 4482
114HGS2PL-SD		Sandbar			$ 4482
114HGS2PL-ST		Sterling Silver			$ 4482
114HGS2PL-WH		White			$ 4127
114HGS2PLWP-BI	Whirlpool Massage	Biscuit			$ 5733
114HGS2PLWP-LN		Linen			$ 5733
114HGS2PLWP-WH		White			$ 5698

DARSEY 114HGS - PRICING CATEGORY : EH

SKU	System	Color	Configuration	Dimensions & Weight	MSRP
114HGS2PR-AL	Soaker - No System	Almond	Right-hand Drain	114” x 42” x 79” / 240 lb 2896mm x 1067mm x 2007mm / 108.84 kg	$ 4162
114HGS2PR-BI		Biscuit			$ 4162
114HGS2PR-BK		Black			$ 4482
114HGS2PR-BO		Bone			$ 4162
114HGS2PR-ME		Mexican Sand			$ 4482
114HGS2PR-SD		Sandbar			$ 4482
114HGS2PR-ST		Sterling Silver			$ 4482
114HGS2PR-WH		White			$ 4127
114HGS2PRWP-BI	Whirlpool Massage	Biscuit			$ 5733
114HGS2PRWP-LN		Linen			$ 5733
114HGS2PRWP-WH		White			$ 5698

OPTIONS

SKU	Description	MSRP
DDWO-PC	Designer drain waste & overflow kit Available finishes: White **(WH)**, Bone **(BO)**, Polished Chrome **(PC)**, Polished Brass**(PB)**, Brushed Nickel**(BN)**,	$ 288
DDWO-PB	Designer drain waste & overflow kit Available finishes: White **(WH)**, Bone **(BO)**, Polished Chrome **(PC)**, Polished Brass**(PB)**, Brushed Nickel**(BN)**,	$ 288
DDWO-BO	Designer drain waste & overflow kit Available finishes: White **(WH)**, Bone **(BO)**, Polished Chrome **(PC)**, Polished Brass**(PB)**, Brushed Nickel**(BN)**,	$ 288
DDWO-WH		$ 288
DDWO-BN		$ 288
35RKBO	Finish repair kit - Case of 12 Available in White **(WH)**, or Bone **(BO)**,	$ 303
35RKWH		$ 303
4816STRP	Convenient access panel Whirlpool option only	$ 240
PLL2	Pump location is applicable to whirlpools and blower location for air system No charge option Refer to technical drawing for applicable choices	$ 0
PLL3		$ 0
PLL4		$ 0
PLL5		$ 0

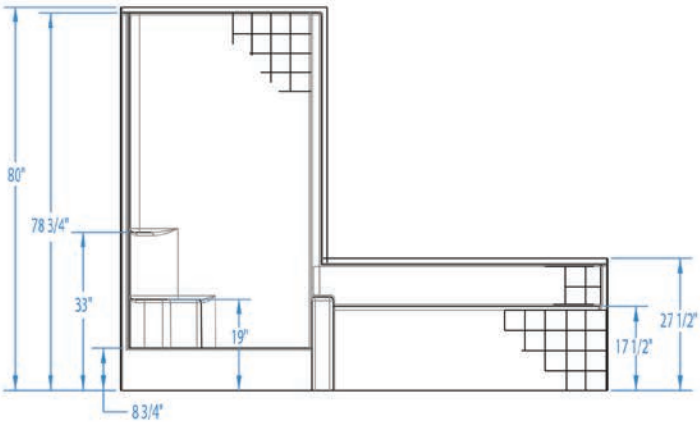
80"
78 3/4"
33"
19"
8 3/4"
27 1/2"
17 1/2"

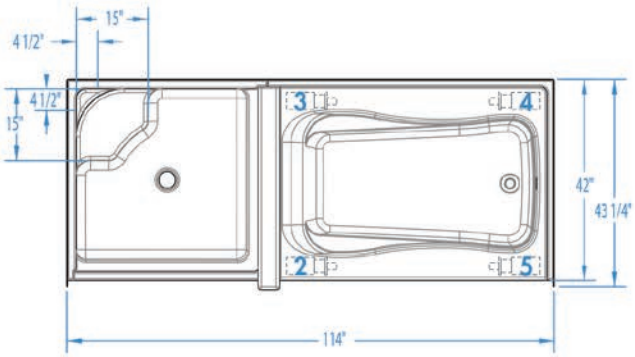
15"
4 1/2"
4 1/2"
15"
3
4
2
5
42"
43 1/4"
114"

HYDROTHERAPY SERIES PRODUCTS



6030AIS





Material : Premium Cast Acrylic

Max: 53 Gal

Features

- Ergonomic bathing well for comfort
- Integral 17 in. skirt
- Slip-resistant textured floor for safety
- Pre-leveled base
- Left or right drain
- Premium cast acrylic surface

6030AIS - PRICING CATEGORY : HV

SKU	System	Color	Configuration	Dimensions & Weight	MSRP
6030AISL-BI	Soaker - No System	Biscuit	Left-hand Drain	60” x 30” x 17” / 742 lb 1524mm x 762mm x 432mm / 336.51 kg	$ 868
6030AISL-WH		White			$ 833
6030AISR-BI		Biscuit	Right-hand Drain		$ 868
6030AISR-WH		White			$ 833

OPTIONS

SKU	Description	MSRP
CDOBCD	Cable drive waste & overflow kit Available finishes: White **(WH)**, Biscuit **(BI)**, Chrome **(CH)**, Polished Brass **(BR)**, Brushed Nickel **(SN)**, Oil rubbed bronze **(OB)**,	$ 625
CDWHCD	Cable drive waste & overflow kit Available finishes: White **(WH)**, Biscuit **(BI)**, Chrome **(CH)**, Polished Brass **(BR)**, Brushed Nickel **(SN)**, Oil rubbed bronze **(OB)**,	$ 554
CDBRCD	Cable drive waste & overflow kit Available finishes: White **(WH)**, Biscuit **(BI)**, Chrome **(CH)**, Polished Brass **(BR)**, Brushed Nickel **(SN)**, Oil rubbed bronze **(OB)**,	$ 625
CDBICD		$ 554
CDSNCD		$ 625
CDCHCD		$ 490

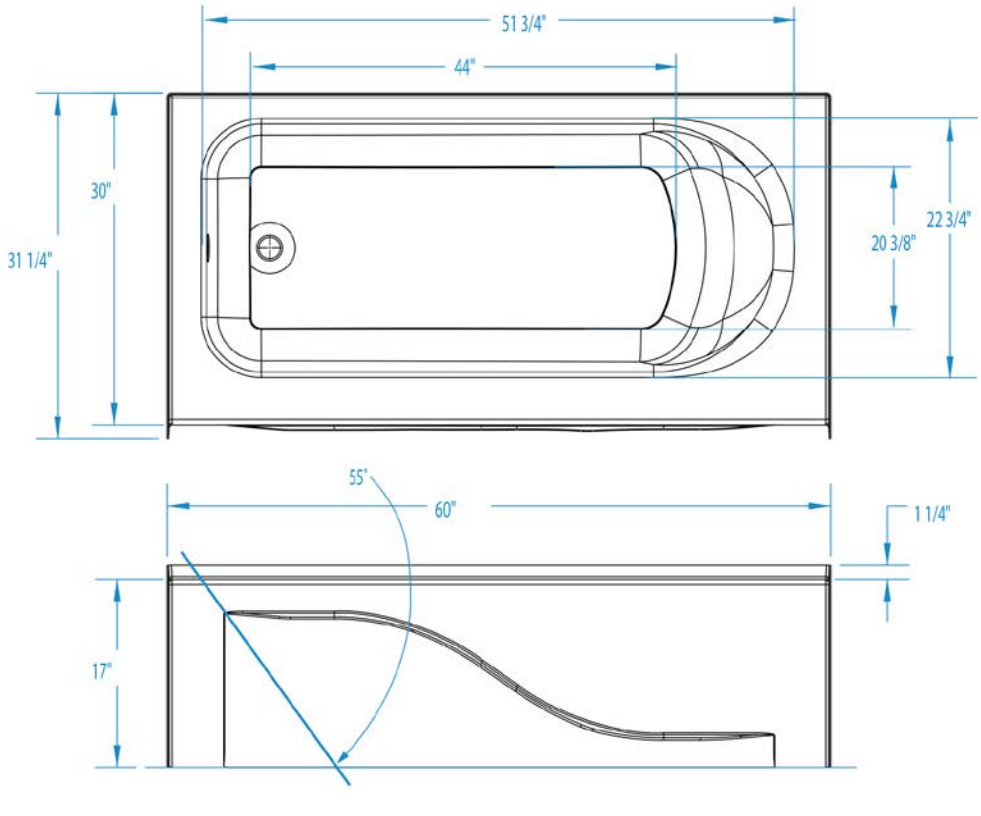
51 3/4"
44"
30"
31 1/4"
20 3/8"
22 3/4"
55°
60"
1 1/4"
17"
B
10 3/4"
A

Alydar I Elements





Material : Premium Cast Acrylic

Min: 44 Gal
Max: 57 Gal

Features

- Ergonomic bathing well for comfort
- Sculpted armrests
- Can be used in undermount or drop-in application
- Pre-leveled wood base makes installation easier
- Slip resistant textured floor for safety
- Universal drain
- Premium cast acrylic surface
- Whirlpool Features:
- Pneumatic on/off control
- 6 directional hydrotherapy jets
- Whirlpool pump
- Safety suction system

ALYDAR I ELEMENTS - PRICING CATEGORY : HE

SKU	System	Color	Configuration	Dimensions & Weight	MSRP
5660620V-BI	Soaker - No System	Biscuit	Universal	60” x 42” x 23 7/8” / 162 lb 1524mm x 1067mm x 584mm / 73.47 kg	$ 884
5660620V-WH		White			$ 849
5660621V-BI	Whirlpool Massage	Biscuit			$ 1496
5660621V-WH		White			$ 1461

OPTIONS

SKU	Description	MSRP
LPNC-ELEMENTS	Alternate pump location Premium option for Elements whirlpools Specify at time of order; refer to drawing.	$ 66
LP45-ELEMENTS	Alternate pump location Premium option for Elements whirlpools Specify at time of order; refer to drawing.	$ 66
LPP4-ELEMENTS	Alternate pump location Premium option for Elements whirlpools Specify at time of order; refer to drawing.	$ 66
LPP5-ELEMENTS		$ 66
8095HEATER	Factory installed inline heater Applicable to whirlpools only	$ 541
HTH1		$ 568
CRATE-ELEMENTS	Crating charge option for one at at time shipment Requires additional charges for freight collect shipment. Consult customer care	$ 73

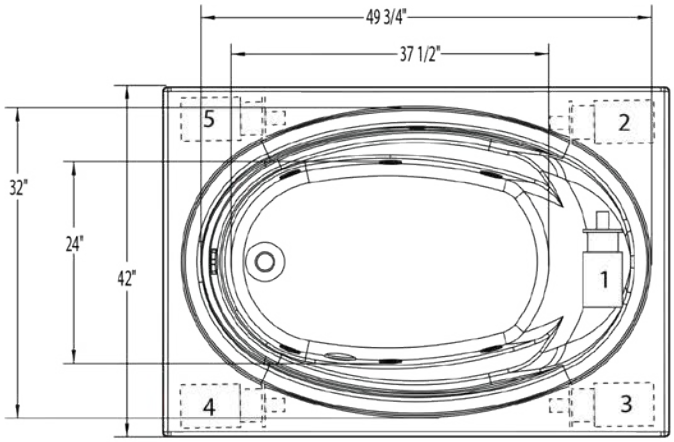
49 3/4"
37 1/2"
32"
24"
42"
5
2
1
4
3

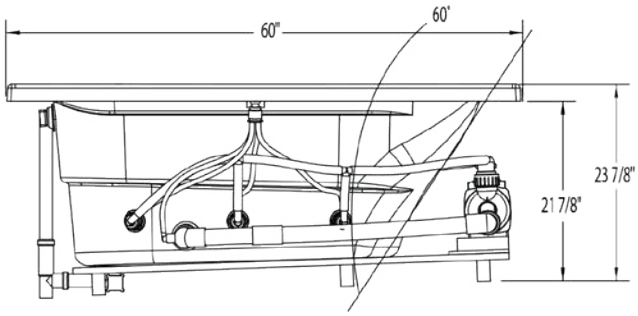
60"
60"
23 7/8"
21 7/8"

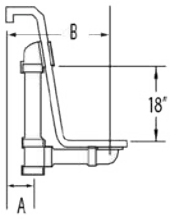
B
18"
A

Alydar I Stocking





Material : Premium Cast Acrylic

Min: 44 Gal
Max: 57 Gal

Features

- Ergonomic bathing well for comfort
- Sculpted armrests
- Can be used in an undermount or drop-in application
- Pre-leveled wood base makes installation easier
- Slip resistant textured floor for safety
- Universal drain
- Premium cast acrylic surface
- Whirlpool Features:
- Pneumatic on/off control
- 8 hydrotherapy jets: High-flow directional and Low-profile spinning micro-jets
- Whirlpool pump
- Safety suction system
- Air Bath Features:
- Pneumatic on/off control
- Perimeter air system
- Single-speed heated-air blower with automated purge and dry cycle

ALYDAR I STOCKING - PRICING CATEGORY : HV

SKU	System	Color	Configuration	Dimensions & Weight	MSRP
5660620-BI	Soaker - No System	Biscuit	Universal	60” x 42” x 23 7/8” / 162 lb 1524mm x 1067mm x 606mm / 73.47 kg	$ 1490
5660620-WH		White			$ 1455
5660620A-BI	Air Massage	Biscuit			$ 2687
5660620A-WH		White			$ 2652
5660621-BI	Whirlpool Massage	Biscuit			$ 2560
5660621-WH		White			$ 2525

OPTIONS

SKU	Description	MSRP
PLL2	Pump location is applicable to whirlpools and blower location for air system No charge option Refer to technical drawing for applicable choices	$ 0
PLL3	Pump location is applicable to whirlpools and blower location for air system No charge option Refer to technical drawing for applicable choices	$ 0

OPTIONS

SKU	Description	MSRP
PLL4	Pump location is applicable to whirlpools and blower location for air system No charge option Refer to technical drawing for applicable choices	$ 0
PLL5		$ 0
CDOBCD	Cable drive waste & overflow kit Available finishes: White **(WH)**, Biscuit **(BI)**, Chrome **(CH)**, Polished Brass **(BR)**, Brushed Nickel **(SN)**, Oil rubbed bronze **(OB)**,	$ 625
CDWHCD		$ 554
CDBRCD		$ 625
CDBICD		$ 554
CDSNCD		$ 625
CDCHCD		$ 490
8095HEATER	Factory installed inline heater Applicable to whirlpools only	$ 541
HTH1		$ 568
IF3T-BC	Factory installed Drawing required at time of order to specify side	$ 98

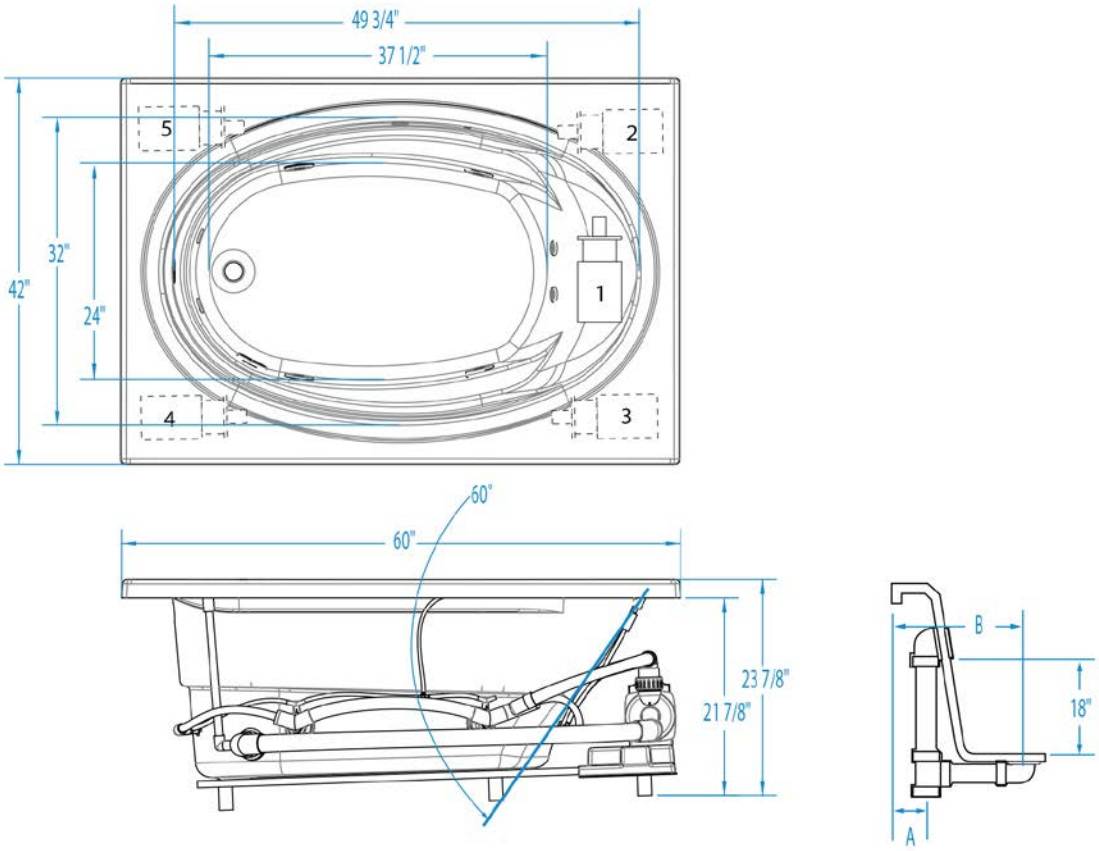
49 3/4"
37 1/2"
42"
32"
24"
5
2
1
4
3
60"
60"
23 7/8"
21 7/8"
B
18"
A

Alydar II Elements





Material : Premium Cast Acrylic

Min: 50 Gal
Max: 67 Gal

Features

- Ergonomic bathing well for comfort
- Sculpted armrests
- Can be used in undermount or drop-in application
- Pre-leveled wood base makes installation easier
- Slip resistant textured floor for safety
- Universal drain
- Premium cast acrylic surface
- Whirlpool Features:
- Pneumatic on/off control
- 6 directional hydrotherapy jets
- Whirlpool pump
- Safety suction system

ALYDAR II ELEMENTS - PRICING CATEGORY : HE

SKU	System	Color	Configuration	Dimensions & Weight	MSRP
5772620V-BI	Soaker - No System	Biscuit	Universal	72” x 42” x 23 7/8” / 171 lb 1829mm x 1067mm x 606mm / 77.55 kg	$ 941
5772620V-WH		White			$ 906
5772621V-BI	Whirlpool Massage	Biscuit			$ 1553
5772621V-WH		White			$ 1518

OPTIONS

SKU	Description	MSRP
LPNC-ELEMENTS	Alternate pump location Premium option for Elements whirlpools Specify at time of order; refer to drawing.	$ 66
LP45-ELEMENTS	Alternate pump location Premium option for Elements whirlpools Specify at time of order; refer to drawing.	$ 66
LPP4-ELEMENTS	Alternate pump location Premium option for Elements whirlpools Specify at time of order; refer to drawing.	$ 66
LPP5-ELEMENTS		$ 66
8095HEATER	Factory installed inline heater Applicable to whirlpools only	$ 541
HTH1		$ 568
CRATE-ELEMENTS	Crating charge option for one at at time shipment Requires additional charges for freight collect shipment. Consult customer care	$ 73

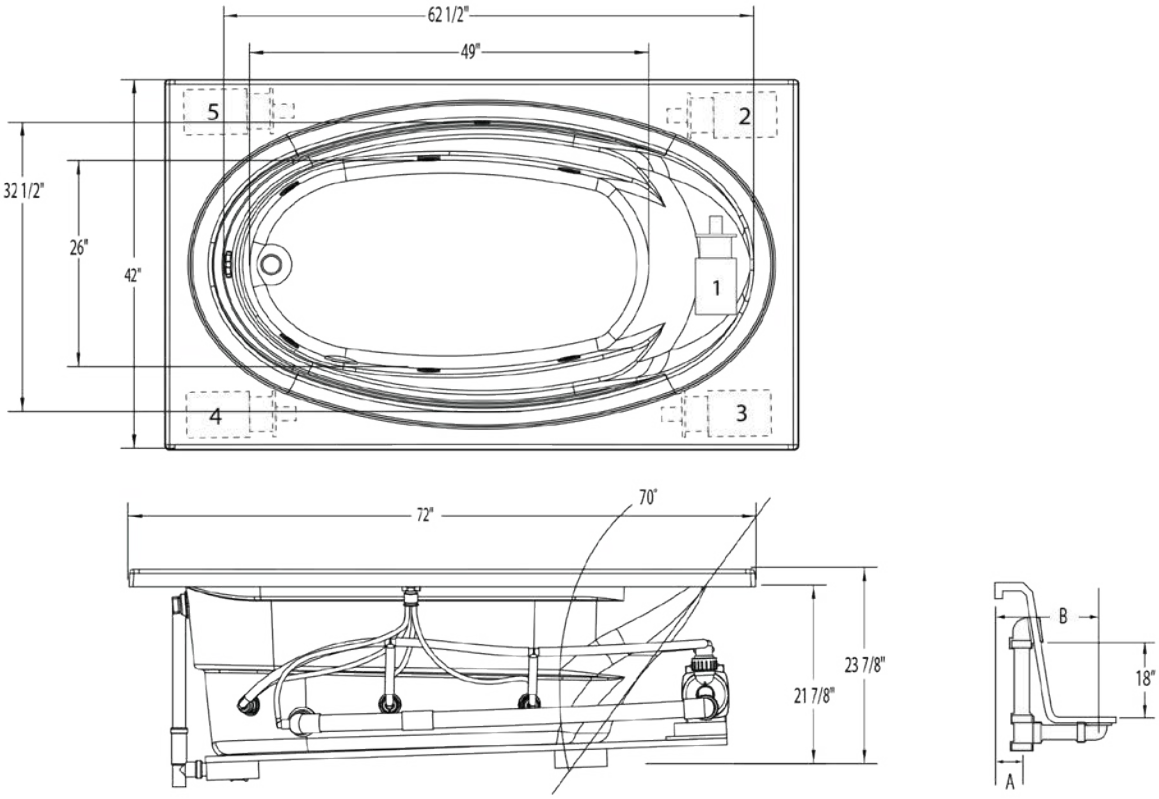
62 1/2"
49"
32 1/2"
26"
42"
5
2
1
4
3
72"
70"
23 7/8"
21 7/8"
B
18"
A

Alydar II Stocking





Material : Premium Cast Acrylic

Min: 50 Gal
Max: 67 Gal

Features

- Ergonomic bathing well for comfort
- Sculpted armrests
- Can be used in an undermount or drop-in application
- Pre-leveled wood base makes installation easier
- Slip resistant textured floor for safety
- Universal drain
- Premium cast acrylic surface
- Whirlpool Features:
- Pneumatic on/off control
- 8 hydrotherapy jets: High-flow directional and Low-profile spinning micro-jets
- Whirlpool pump
- Safety suction system
- Air Bath Features:
- Pneumatic on/off control
- Perimeter air system
- Single-speed heated-air blower with automated purge and dry cycle

ALYDAR II STOCKING - PRICING CATEGORY : HV

SKU	System	Color	Configuration	Dimensions & Weight	MSRP
5772620-BI	Soaker - No System	Biscuit	Universal	72” x 42” x 23 7/8” / 171 lb 1829mm x 1067mm x 606mm / 77.55 kg	$ 1710
5772620-WH		White			$ 1675
5772620A-BI	Air Massage	Biscuit			$ 2977
5772620A-WH		White			$ 2942
5772621-BI	Whirlpool Massage	Biscuit			$ 2804
5772621-WH		White			$ 2769

OPTIONS

SKU	Description	MSRP
72ACSK	Color matched 72 inch acrylic skirt with removable access panel	$ 1269
PLL2	Pump location is applicable to whirlpools and blower location for air system No charge option Refer to technical drawing for applicable choices	$ 0

OPTIONS

SKU	Description	MSRP
PLL3	Pump location is applicable to whirlpools and blower location for air system No charge option Refer to technical drawing for applicable choices	$ 0
PLL4		$ 0
PLL5		$ 0
CDOBCD	Cable drive waste & overflow kit Available finishes: White **(WH)**, Biscuit **(BI)**, Chrome **(CH)**, Polished Brass **(BR)**, Brushed Nickel **(SN)**, Oil rubbed bronze **(OB)**,	$ 625
CDWHCD		$ 554
CDBRCD		$ 625
CDBICD		$ 554
CDSNCD		$ 625
CDCHCD		$ 490
8095HEATER	Factory installed inline heater Applicable to whirlpools only	$ 541
HTH1		$ 568
IF3T-BC	Factory installed Drawing required at time of order to specify side	$ 98

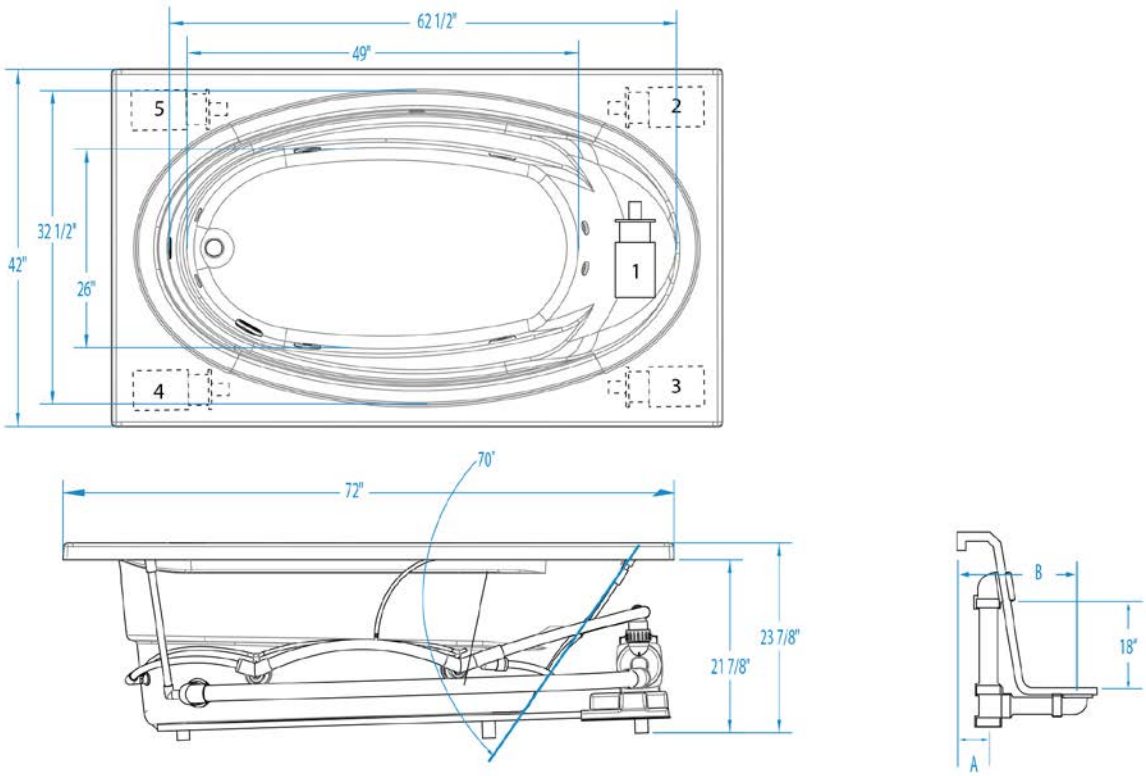
62 1/2"
49"
5
2
32 1/2"
42"
26"
1
4
3
70°
72"
23 7/8"
21 7/8"
B
18"
A

Ariel I Elements





Material : Premium Cast Acrylic

Min: 44 Gal
Max: 57 Gal

Features

- Ergonomic bathing well for comfort
- Sculpted armrests
- Pre-leveled wood base makes installation easier
- Slip resistant textured floor for safety
- Universal drain
- Premium cast acrylic surface
- Whirlpool Features:
- Pneumatic on/off control
- 6 directional hydrotherapy jets
- Whirlpool pump
- Safety suction system

ARIEL I ELEMENTS - PRICING CATEGORY : HE

SKU	System	Color	Configuration	Dimensions & Weight	MSRP
2860420V-BI	Soaker - No System	Biscuit	Universal	60” x 42” x 23” / 153 lb 1524mm x 1067mm x 584mm / 69.39 kg	$ 884
2860420V-WH		White			$ 849
2860421V-BI	Whirlpool Massage	Biscuit			$ 1496
2860421V-WH		White			$ 1461

OPTIONS

SKU	Description	MSRP
8095HEATER	Factory installed inline heater Applicable to whirlpools only	$ 541
HTH1	Factory installed inline heater Applicable to whirlpools only	$ 568
CRATE-ELEMENTS	Crating charge option for one at at time shipment Requires additional charges for freight collect shipment. Consult customer care	$ 73

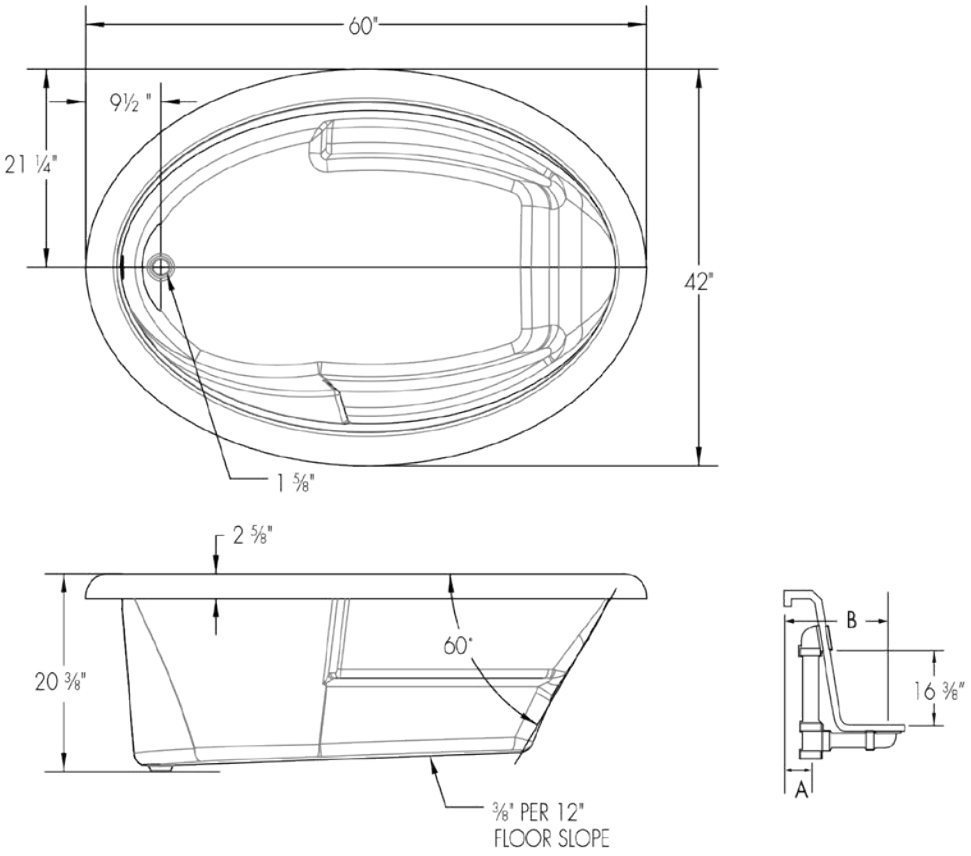
60"
9½ "
21 ¼"
42"
1 ⅝"
2 ⅝"
20 ⅜"
60°
⅜" PER 12"
FLOOR SLOPE
B
16 ⅜"
A

Ariel I Stocking





Material : Premium Cast Acrylic

Min: 44 Gal
Max: 57 Gal

Features

- Ergonomic bathing well for comfort
- Sculpted armrests
- Pre-leveled wood base makes installation easier
- Slip resistant textured floor for safety
- Universal drain
- Premium cast acrylic surface
- Whirlpool Features:
- Pneumatic on/off control
- 8 hydrotherapy jets: High-flow directional and Low-profile spinning micro-jets
- Whirlpool pump
- Safety suction system
- Air Bath Features:
- Pneumatic on/off control
- Perimeter air system
- Single-speed heated-air blower with automated purge and dry cycle

ARIEL I STOCKING - PRICING CATEGORY : HV

SKU	System	Color	Configuration	Dimensions & Weight	MSRP
2860420-BI	Soaker - No System	Biscuit	Universal	60” x 42” x 23” / 153 lb 1524mm x 1067mm x 584mm / 69.39 kg	$ 1451
2860420-WH		White			$ 1416
2860420A-BI	Air Massage	Biscuit			$ 2994
2860420A-WH		White			$ 2959
2860421-BI	Whirlpool Massage	Biscuit			$ 2820
2860421-WH		White			$ 2785

OPTIONS

SKU	Description	MSRP
CDOBCD	Cable drive waste & overflow kit Available finishes: White **(WH)**, Biscuit **(BI)**, Chrome **(CH)**, Polished Brass **(BR)**, Brushed Nickel **(SN)**, Oil rubbed bronze **(OB)**,	$ 625
CDWHCD	Cable drive waste & overflow kit Available finishes: White **(WH)**, Biscuit **(BI)**, Chrome **(CH)**, Polished Brass **(BR)**, Brushed Nickel **(SN)**, Oil rubbed bronze **(OB)**,	$ 554
CDBRCD	Cable drive waste & overflow kit Available finishes: White **(WH)**, Biscuit **(BI)**, Chrome **(CH)**, Polished Brass **(BR)**, Brushed Nickel **(SN)**, Oil rubbed bronze **(OB)**,	$ 625
CDBICD		$ 554

OPTIONS

SKU	Description	MSRP
CDSNCD	Cable drive waste & overflow kit Available finishes: White **(WH)**, Biscuit **(BI)**, Chrome **(CH)**, Polished Brass **(BR)**, Brushed Nickel **(SN)**, Oil rubbed bronze **(OB)**,	$ 625
CDCHCD		$ 490
8095HEATER	Factory installed inline heater Applicable to whirlpools only	$ 541
HTH1		$ 568

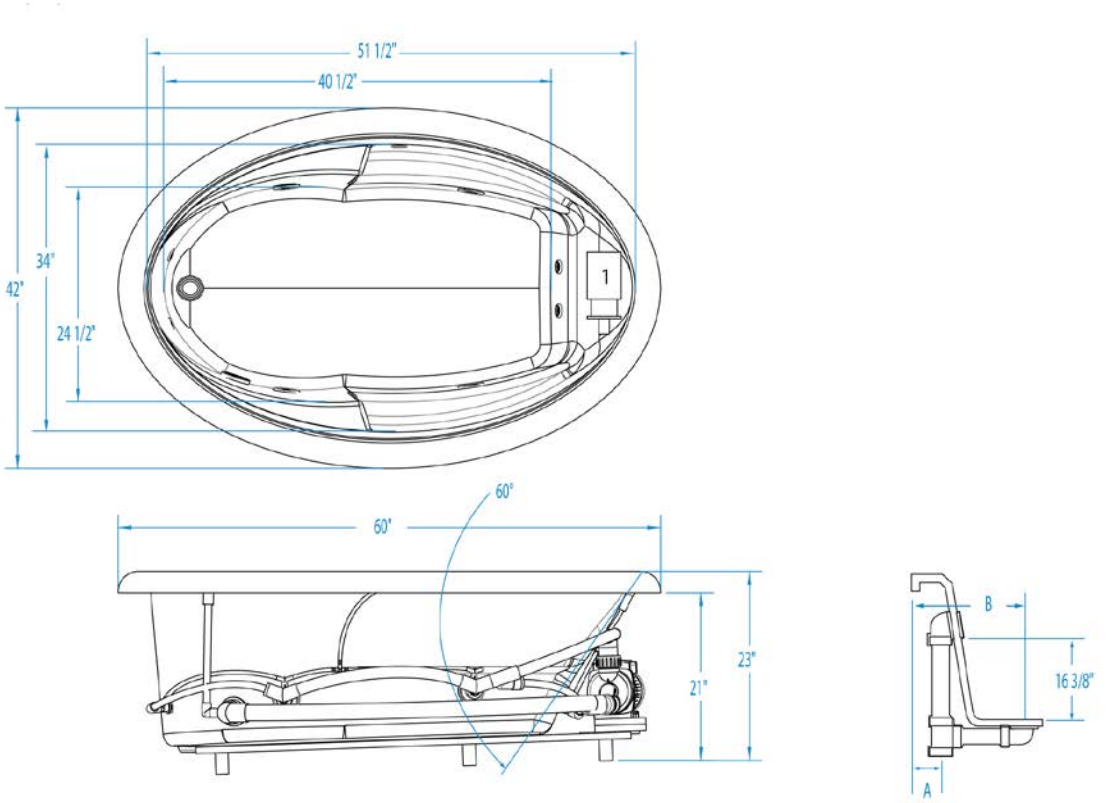
51 1/2"
40 1/2"
34"
42"
24 1/2"
1
60°
60"
23"
21"
B
16 3/8"
A

Ariel II Elements





Material : Premium Cast Acrylic

Min: 47 Gal
Max: 75 Gal

Features

- Ergonomic bathing well for comfort
- Sculpted armrests
- Pre-leveled wood base makes installation easier
- Slip resistant textured floor for safety
- Universal drain
- Premium cast acrylic surface
- Whirlpool Features:
- Pneumatic on/off control
- 6 directional hydrotherapy jets
- Whirlpool pump
- Safety suction system

ARIEL II ELEMENTS - PRICING CATEGORY : HE

SKU	System	Color	Configuration	Dimensions & Weight	MSRP
3366420V-BI	Soaker - No System	Biscuit	Universal	66” x 41 1/4” x 23” / 160 lb 1676mm x 1048mm x 584mm / 72.56 kg	$ 941
3366420V-WH		White			$ 906
3366421V-BI	Whirlpool Massage	Biscuit			$ 1553
3366421V-WH		White			$ 1518

OPTIONS

SKU	Description	MSRP
8095HEATER	Factory installed inline heater Applicable to whirlpools only	$ 541
HTH1	Factory installed inline heater Applicable to whirlpools only	$ 568
CRATE-ELEMENTS	Crating charge option for one at at time shipment Requires additional charges for freight collect shipment. Consult customer care	$ 73

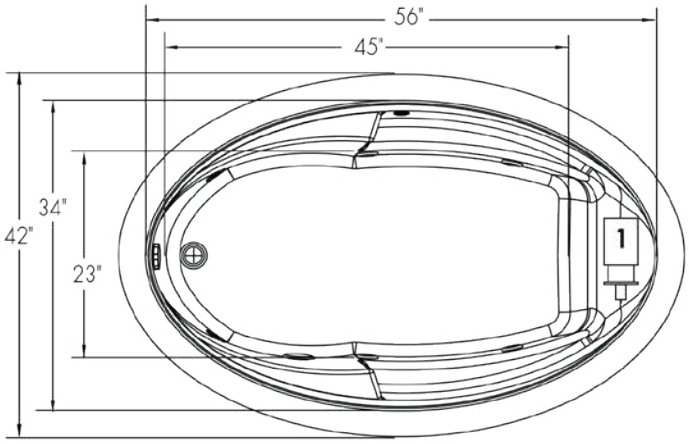
56"
45"
42"
34"
23"
1

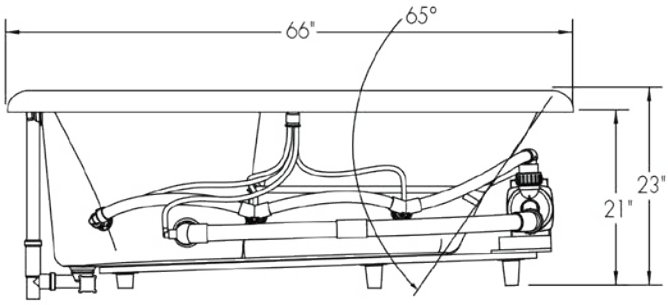
66"
65°
23"
21"

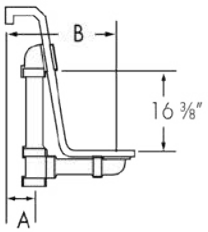
B
16 3/8"
A

Ariel II Stocking





Material : Premium Cast Acrylic

Min: 50 Gal
Max: 85 Gal

Features

- Ergonomic bathing well for comfort
- Sculpted armrests
- Pre-leveled wood base makes installation easier
- Slip resistant textured floor for safety
- Universal drain
- Premium cast acrylic surface
- Whirlpool Features:
- Pneumatic on/off control
- 8 hydrotherapy jets: High-flow directional and Low-profile spinning micro-jets
- Whirlpool pump
- Safety suction system
- Air Bath Features:
- Pneumatic on/off control
- Perimeter air system
- Single-speed heated-air blower with automated purge and dry cycle

ARIEL II STOCKING - PRICING CATEGORY : HV

SKU	System	Color	Configuration	Dimensions & Weight	MSRP
3366420-BI	Soaker - No System	Biscuit	Universal	72” x 41 1/2” x 23” / 160 lb 1829mm x 1054mm x 584mm / 72.56 kg	$ 1529
3366420-WH		White			$ 1494
3366420A-WH	Air Massage				$ 3002
3366421-BI	Whirlpool Massage	Biscuit			$ 2900
3366421-WH		White			$ 2865

OPTIONS

SKU	Description	MSRP
CDOBCD	Cable drive waste & overflow kit Available finishes: White **(WH)**, Biscuit **(BI)**, Chrome **(CH)**, Polished Brass **(BR)**, Brushed Nickel **(SN)**, Oil rubbed bronze **(OB)**,	$ 625
CDWHCD	Cable drive waste & overflow kit Available finishes: White **(WH)**, Biscuit **(BI)**, Chrome **(CH)**, Polished Brass **(BR)**, Brushed Nickel **(SN)**, Oil rubbed bronze **(OB)**,	$ 554
CDBRCD	Cable drive waste & overflow kit Available finishes: White **(WH)**, Biscuit **(BI)**, Chrome **(CH)**, Polished Brass **(BR)**, Brushed Nickel **(SN)**, Oil rubbed bronze **(OB)**,	$ 625
CDBICD		$ 554
CDSNCD		$ 625

OPTIONS

SKU	Description	MSRP
CDCHCD	Cable drive waste & overflow kit Available finishes: White **(WH)**, Biscuit **(BI)**, Chrome **(CH)**, Polished Brass **(BR)**, Brushed Nickel **(SN)**, Oil rubbed bronze **(OB)**,	$ 490
8095HEATER	Factory installed inline heater Applicable to whirlpools only	$ 541
HTH1		$ 568

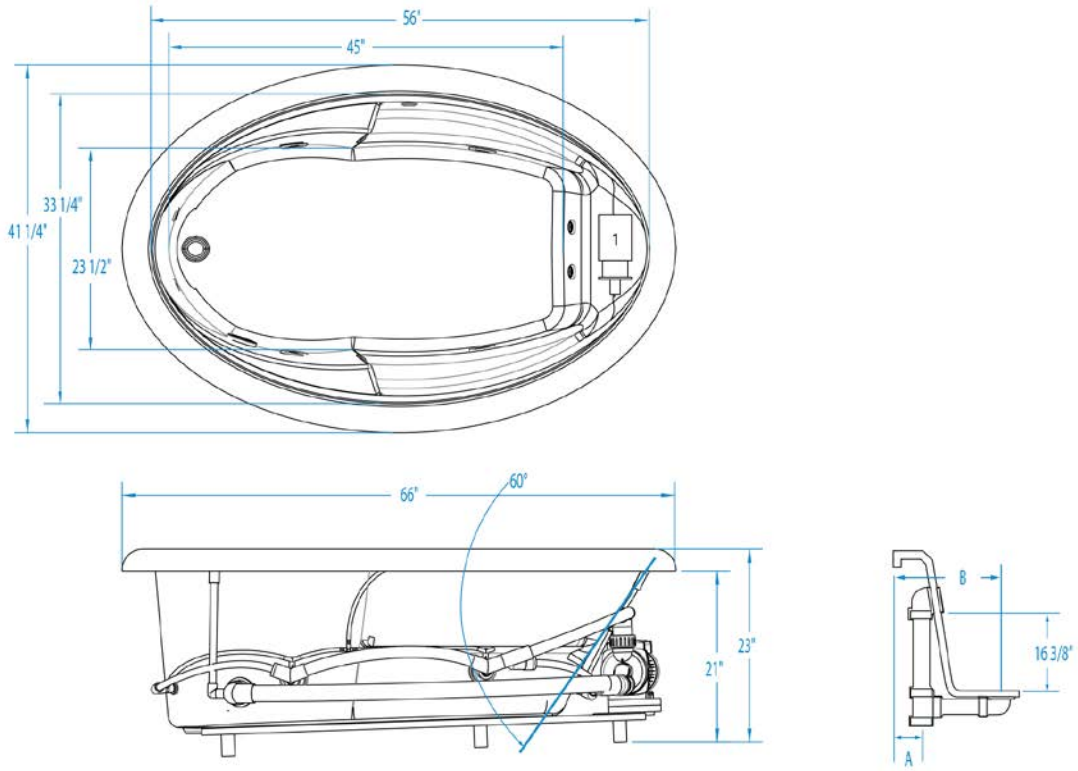
56"
45"
33 1/4"
41 1/4"
23 1/2"
1
66"
60°
23"
21"
B
16 3/8"
A

Ariel III Elements





Material : Premium Cast Acrylic

Min: 50 Gal
Max: 85 Gal

Features

- Ergonomic bathing well for comfort
- Sculpted armrests
- Pre-leveled wood base makes installation easier
- Slip resistant textured floor for safety
- Universal drain
- Premium cast acrylic surface
- Whirlpool Features:
- Pneumatic on/off control
- 6 directional hydrotherapy jets
- Whirlpool pump
- Safety suction system

ARIEL III ELEMENTS - PRICING CATEGORY : HV

SKU	System	Color	Configuration	Dimensions & Weight	MSRP
3172620V-BI	Soaker - No System	Biscuit	Universal	72” x 41 1/2” x 23” / 141 lb 1829mm x 1054mm x 584mm / 63.95 kg	$ 997
3172620V-WH		White			$ 962
3172621V-BI	Whirlpool Massage	Biscuit			$ 1612
3172621V-WH		White			$ 1577

OPTIONS

SKU	Description	MSRP
8095HEATER	Factory installed inline heater Applicable to whirlpools only	$ 541
HTH1	Factory installed inline heater Applicable to whirlpools only	$ 568
CRATE-ELEMENTS	Crating charge option for one at at time shipment Requires additional charges for freight collect shipment. Consult customer care	$ 73

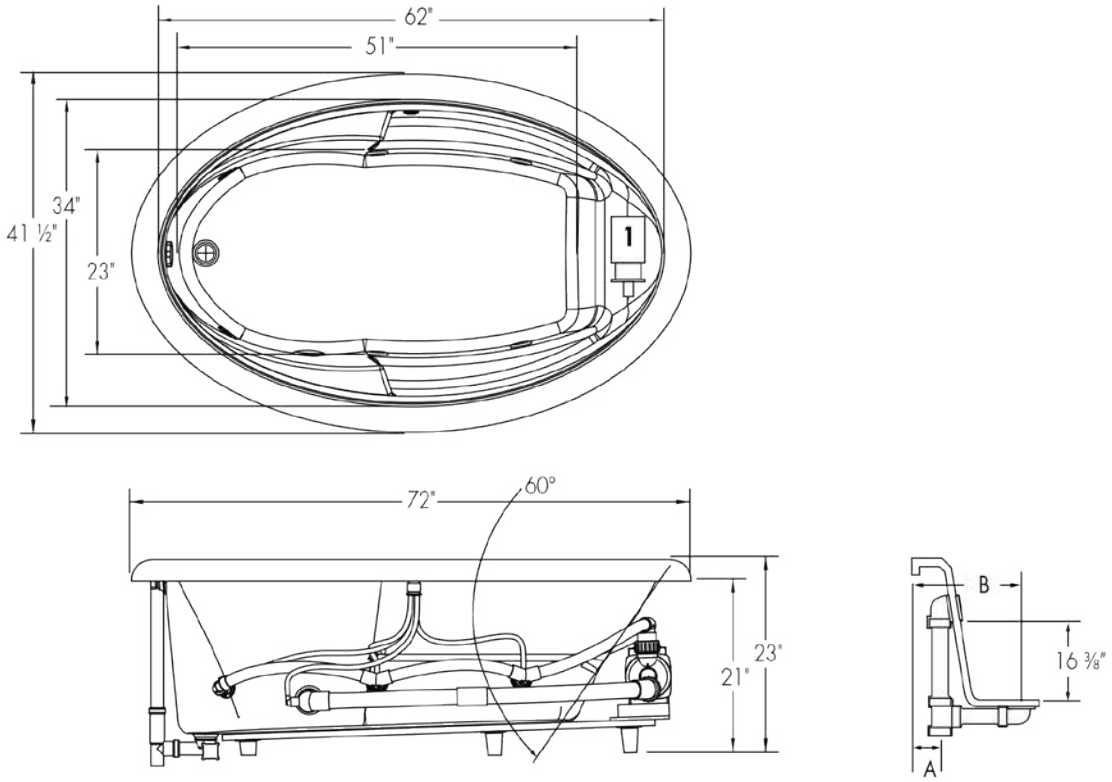
62"
51"
34"
41 ½"
23"
1
72"
60°
23"
21"
B
16 3/8"
A

Ariel III Stocking





Material : Premium Cast Acrylic

Min: 50 Gal
Max: 85 Gal

Features

- Ergonomic bathing well for comfort
- Sculpted armrests
- Pre-leveled wood base makes installation easier
- Slip resistant textured floor for safety
- Universal drain
- Premium cast acrylic surface

ARIEL III STOCKING - PRICING CATEGORY : HV

SKU	System	Color	Configuration	Dimensions & Weight	MSRP
3172620-BI	Soaker - No System	Biscuit	Universal	72” x 41 1/2” x 23” / 141 lb 1829mm x 1054mm x 584mm / 63.95 kg	$ 1571
3172620-WH		White			$ 1536
3172620A-BI	Air Massage	Biscuit			$ 3268
3172620A-WH		White			$ 3233
3172621-BI	Whirlpool Massage	Biscuit			$ 3131
3172621-WH		White			$ 3096

OPTIONS

SKU	Description	MSRP
CDOBCD	Cable drive waste & overflow kit Available finishes: White **(WH)**, Biscuit **(BI)**, Chrome **(CH)**, Polished Brass **(BR)**, Brushed Nickel **(SN)**, Oil rubbed bronze **(OB)**,	$ 625
CDWHCD	Cable drive waste & overflow kit Available finishes: White **(WH)**, Biscuit **(BI)**, Chrome **(CH)**, Polished Brass **(BR)**, Brushed Nickel **(SN)**, Oil rubbed bronze **(OB)**,	$ 554
CDBRCD	Cable drive waste & overflow kit Available finishes: White **(WH)**, Biscuit **(BI)**, Chrome **(CH)**, Polished Brass **(BR)**, Brushed Nickel **(SN)**, Oil rubbed bronze **(OB)**,	$ 625
CDBICD		$ 554
CDSNCD		$ 625
CDCHCD		$ 490
8095HEATER	Factory installed inline heater Applicable to whirlpools only	$ 541
HTH1		$ 568

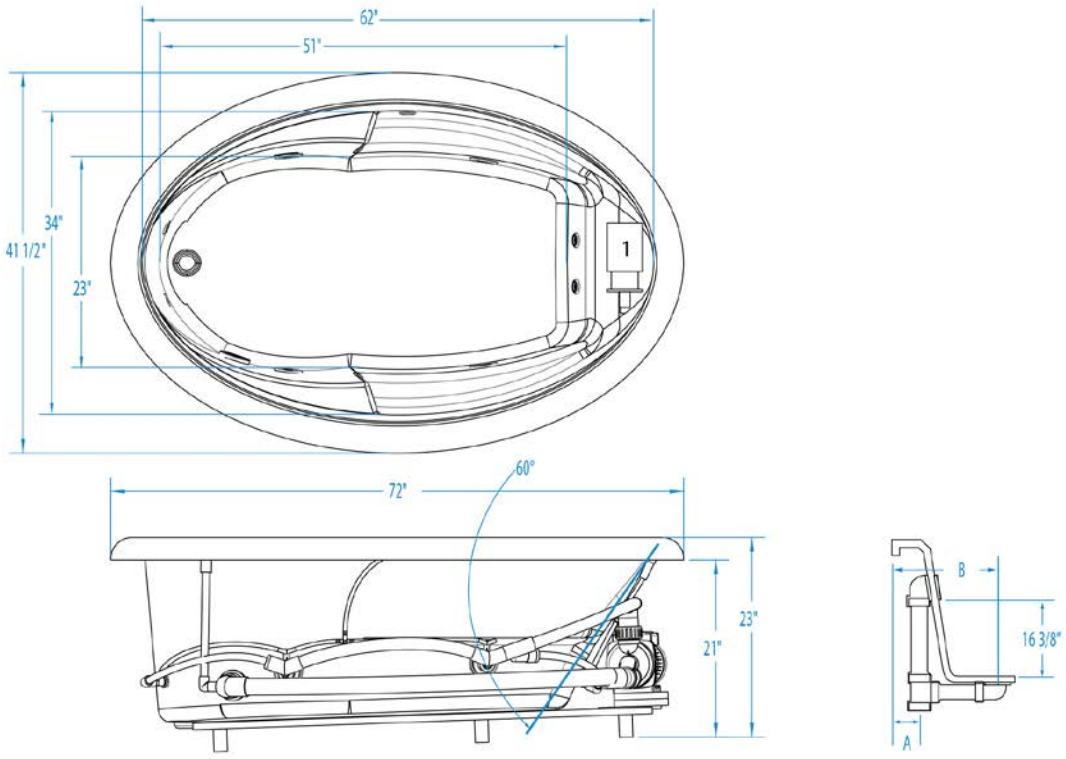
62"
51"
34"
41 1/2"
23"
1
72"
60°
23"
21"
B
16 3/8"
A

Ascot I Stocking

Material : Premium Cast Acrylic

Min: 44 Gal
Max: 51 Gal

Features

- Ergonomic bathing well for comfort
- Scuplted armrests
- Suitable for undermount or drop-in application
- Pre-leveled wood base makes installation easier
- Slip resistant textured floor for safety
- Universal drain
- Premium cast acrylic surface
- Whirlpool Features:
- Pneumatic on/off control
- 8 hydrotherapy jets: High-flow directional and Low-profile spinning micro-jets
- Whirlpool pump
- Safety suction system

ASCOT I STOCKING - PRICING CATEGORY : HV

SKU	System	Color	Configuration	Dimensions & Weight	MSRP
4360530-BI	Soaker - No System	Biscuit	Universal	60” x 34” x 21 1/2” / 160 lb 1524mm x 864mm x 546mm / 72.56 kg	$ 1288
4360530-WH		White			$ 1253
4360531-BI	Whirlpool Massage	Biscuit			$ 2343
4360531-WH		White			$ 2308

OPTIONS

SKU	Description	MSRP
CDOBCD	Cable drive waste & overflow kit Available finishes: White **(WH)**, Biscuit **(BI)**, Chrome **(CH)**, Polished Brass **(BR)**, Brushed Nickel **(SN)**, Oil rubbed bronze **(OB)**,	$ 625
CDWHCD	Cable drive waste & overflow kit Available finishes: White **(WH)**, Biscuit **(BI)**, Chrome **(CH)**, Polished Brass **(BR)**, Brushed Nickel **(SN)**, Oil rubbed bronze **(OB)**,	$ 554
CDBRCD	Cable drive waste & overflow kit Available finishes: White **(WH)**, Biscuit **(BI)**, Chrome **(CH)**, Polished Brass **(BR)**, Brushed Nickel **(SN)**, Oil rubbed bronze **(OB)**,	$ 625
CDBICD		$ 554
CDSNCD		$ 625
CDCHCD		$ 490
8095HEATER	Factory installed inline heater Applicable to whirlpools only	$ 541
HTH1		$ 568
IF3T-BC	Factory installed Drawing required at time of order to specify side	$ 98

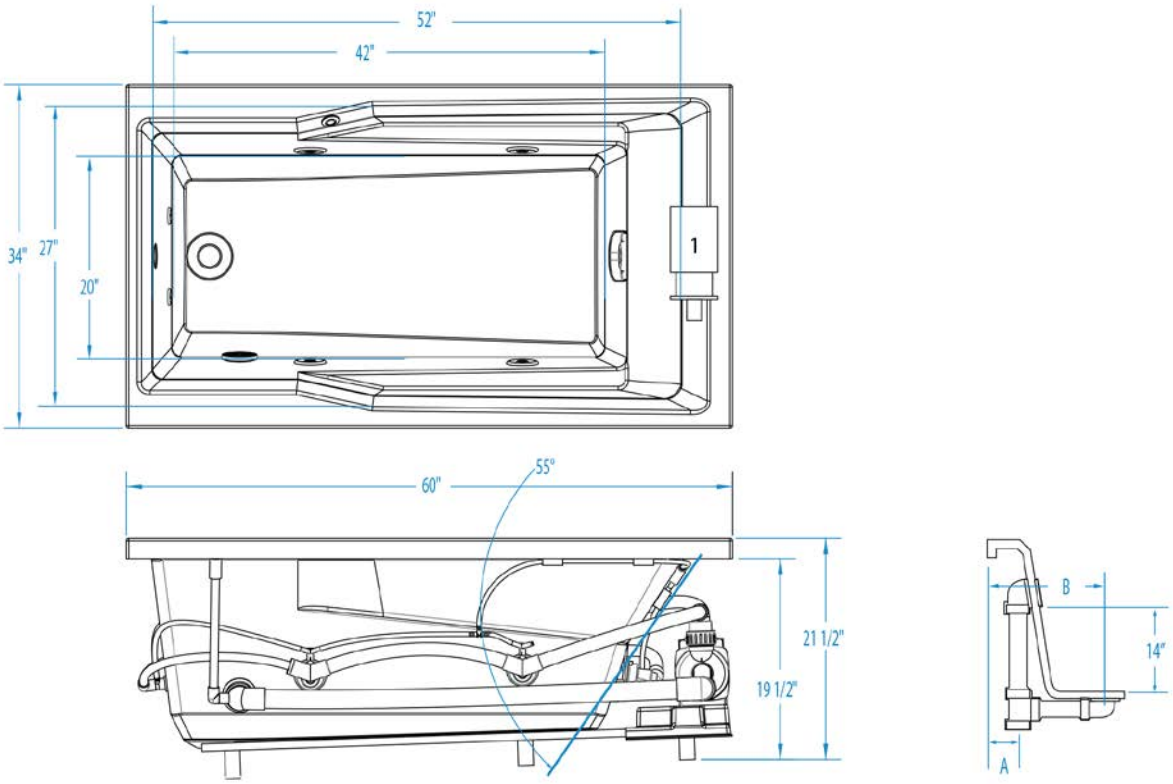
52"
42"
34"
27"
20"
1
60"
55°
21 1/2"
19 1/2"
B
14"
A

Ascot II Stocking



Material : Premium Cast Acrylic

Min: 47 Gal
Max: 62 Gal

Features

- Ergonomic bathing well for comfort
- Sculpted armrests
- Can be used in an undermount or drop-in application
- Pre-leveled wood base makes installation easier
- Slip resistant textured floor for safety
- Universal drain
- Premium cast acrylic surface
- Whirlpool Features:
- Pneumatic on/off control
- 8 hydrotherapy jets: High-flow directional and Low-profile spinning micro-jets
- Whirlpool pump
- Safety suction system

ASCOT II STOCKING - PRICING CATEGORY : HV

SKU	System	Color	Configuration	Dimensions & Weight	MSRP
4466530-BI	Soaker - No System	Biscuit	Universal	66” x 34” x 21 1/2” / 166 lb 1676mm x 864mm x 546mm / 75.28 kg	$ 1338
4466530-WH		White			$ 1303
4466531-BI	Whirlpool Massage	Biscuit			$ 2416
4466531-WH		White			$ 2381

OPTIONS

SKU	Description	MSRP
66ACSK	Color matched 66 inch acrylic skirt with removable access panel	$ 1269
CDOBCD	Cable drive waste & overflow kit Available finishes: White **(WH)**, Biscuit **(BI)**, Chrome **(CH)**, Polished Brass **(BR)**, Brushed Nickel **(SN)**, Oil rubbed bronze **(OB)**,	$ 625
CDWHCD	Cable drive waste & overflow kit Available finishes: White **(WH)**, Biscuit **(BI)**, Chrome **(CH)**, Polished Brass **(BR)**, Brushed Nickel **(SN)**, Oil rubbed bronze **(OB)**,	$ 554
CDBRCD		$ 625
CDBICD		$ 554
CDSNCD		$ 625
CDCHCD		$ 490
8095HEATER	Factory installed inline heater Applicable to whirlpools only	$ 541
HTH1		$ 568

OPTIONS

SKU	Description	MSRP
IF3T-BC	Factory installed Drawing required at time of order to specify side	$ 98

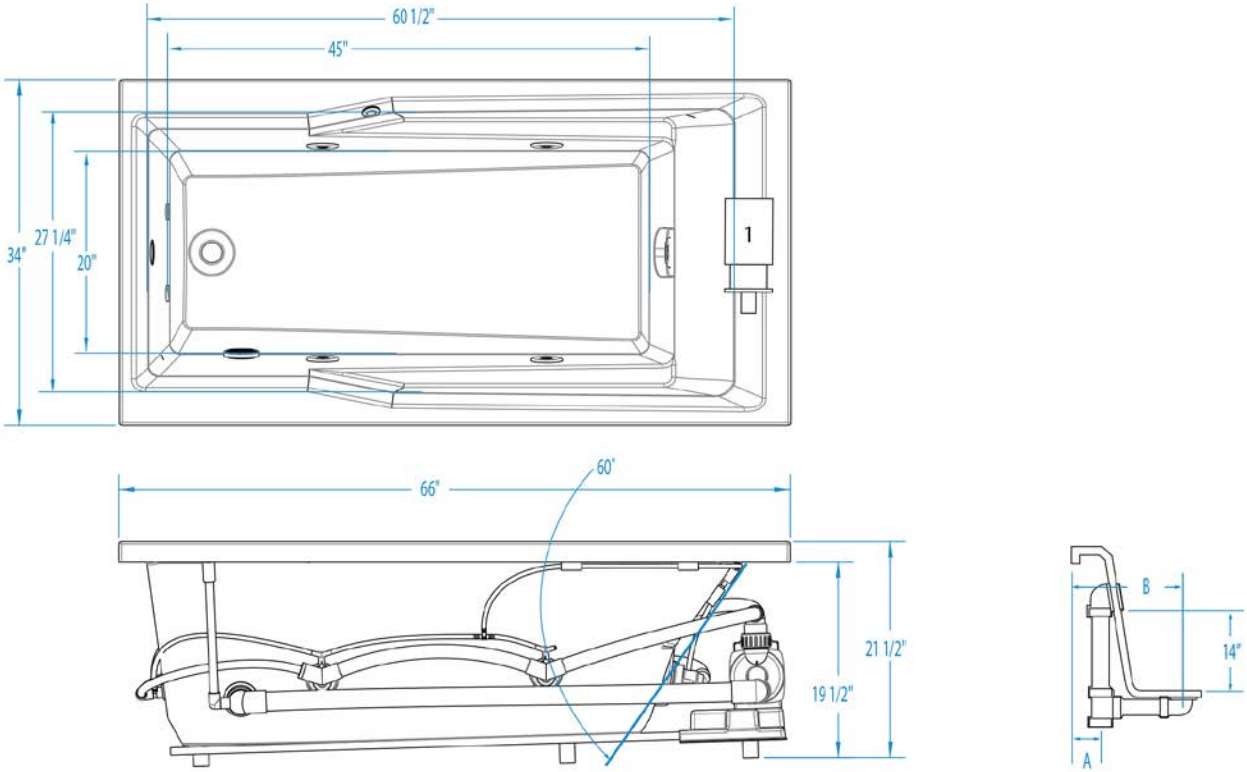
60 1/2"
45"
34"
27 1/4"
20"
1
66"
60°
21 1/2"
19 1/2"
B
14"
A

Ascot III Stocking



Material : Premium Cast Acrylic

Min: 50 Gal
Max: 67 Gal

Features

- Ergonomic bathing well for comfort
- Sculpted armrests
- Suitable for undermount or drop-in application
- Pre-leveled wood base makes installation easier
- Slip-resistant textured floor for safety
- Universal drain
- Premium cast acrylic surface
- Whirlpool Features:
- Pneumatic on/off control
- 8 hydrotherapy jets: High-flow directional and Low-profile spinning micro-jets
- Whirlpool pump
- Safety suction system

ASCOT III STOCKING - PRICING CATEGORY : HV

SKU	System	Color	Configuration	Dimensions & Weight	MSRP
4572530-BI	Soaker - No System	Biscuit	Universal	72" x 36" x 21 1/2" / 172 lb 1829mm x 914mm x 546mm / 78.0 kg	$ 1352
4572530-WH		White			$ 1317
4572531-BI	Whirlpool Massage	Biscuit			$ 2488
4572531-WH		White			$ 2453

OPTIONS

SKU	Description	MSRP
72ACSK	Color matched 72 inch acrylic skirt with removable access panel	$ 1269
CDOBCD	Cable drive waste & overflow kit Available finishes: White **(WH)**, Biscuit **(BI)**, Chrome **(CH)**, Polished Brass **(BR)**, Brushed Nickel **(SN)**, Oil rubbed bronze **(OB)**,	$ 625
CDWHCD	Cable drive waste & overflow kit Available finishes: White **(WH)**, Biscuit **(BI)**, Chrome **(CH)**, Polished Brass **(BR)**, Brushed Nickel **(SN)**, Oil rubbed bronze **(OB)**,	$ 554
CDBRCD		$ 625
CDBICD		$ 554
CDSNCD		$ 625
CDCHCD		$ 490
8095HEATER	Factory installed inline heater Applicable to whirlpools only	$ 541
HTH1		$ 568
IF3T-BC	Factory installed Drawing required at time of order to specify side	$ 98

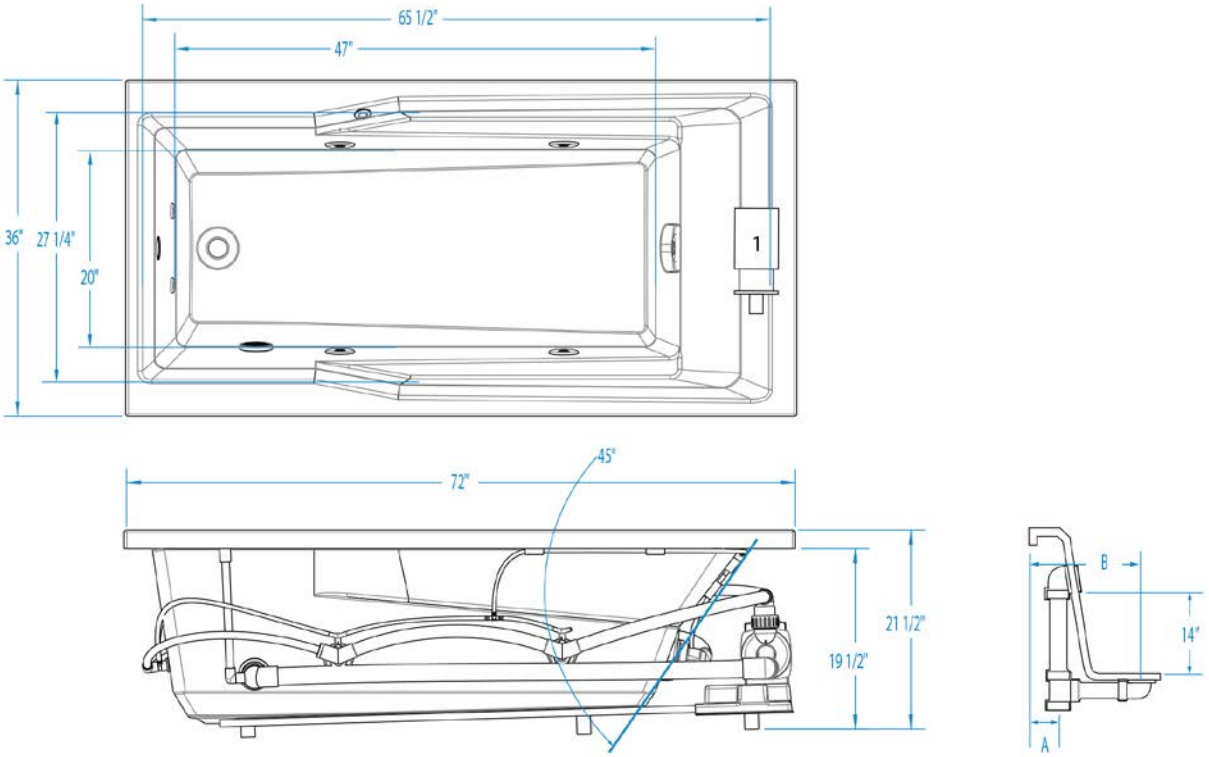
65 1/2"
47"
36"
27 1/4"
20"
1
72"
45°
21 1/2"
19 1/2"
B
14"
A

Belmont I Elements





Material : Premium Cast Acrylic

Min: 44 Gal
Max: 62 Gal

Features

- Ergonomic bathing well for comfort
- Sculpted armrests
- Can be used in an undermount or drop-in application
- Pre-leveled wood base makes installation easier
- Slip resistant textured floor for safety
- Universal drain
- Premium cast acrylic surface
- Whirlpool Features:
- Pneumatic on/off control
- 6 directional hydrotherapy jets
- Whirlpool pump
- Safety suction system

BELMONT I ELEMENTS - PRICING CATEGORY : HE

SKU	System	Color	Configuration	Dimensions & Weight	MSRP
3960620V-BI	Soaker - No System	Biscuit	Universal	59” x 40” x 23 7/8” / 154 lb 1499mm x 1016mm x 606mm / 69.84 kg	$ 884
3960620V-WH		White			$ 849
3960621V-BI	Whirlpool Massage	Biscuit			$ 1496
3960621V-WH		White			$ 1461

OPTIONS

SKU	Description	MSRP
8095HEATER	Factory installed inline heater Applicable to whirlpools only	$ 541
HTH1	Factory installed inline heater Applicable to whirlpools only	$ 568
CRATE-ELEMENTS	Crating charge option for one at at time shipment Requires additional charges for freight collect shipment. Consult customer care	$ 73

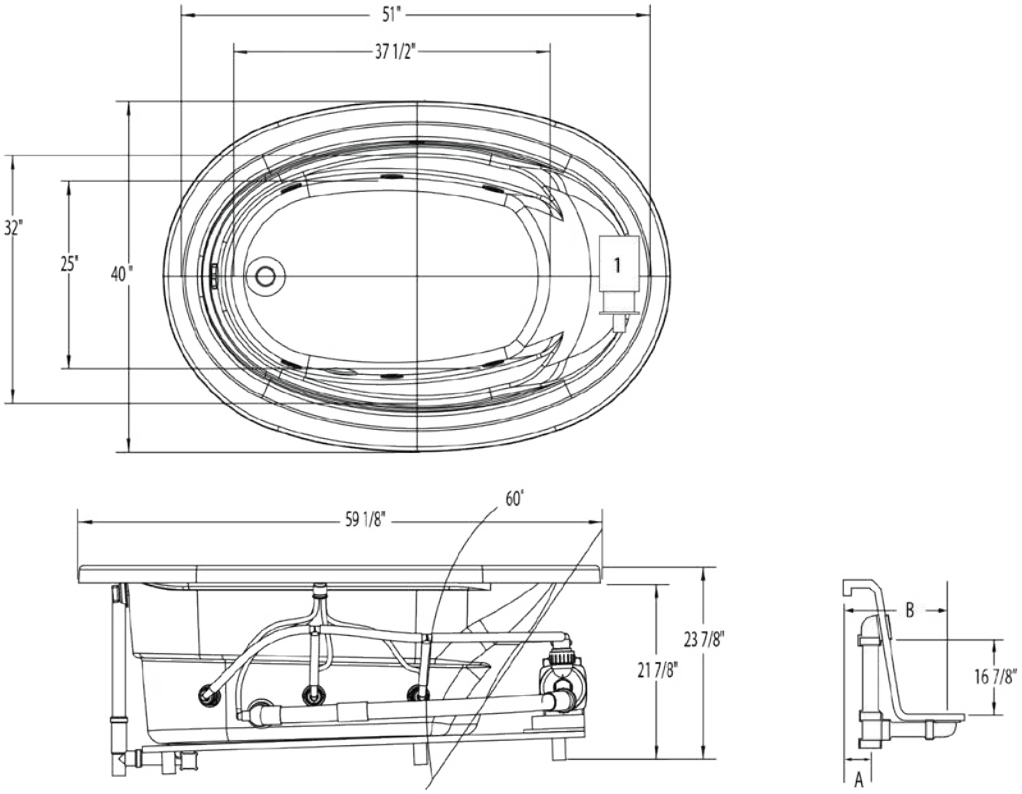
51"
37 1/2"
32"
25"
40"
1
59 1/8"
60"
23 7/8"
21 7/8"
B
16 7/8"
A

Belmont I Stocking





Material : Premium Cast Acrylic

Min: 44 Gal
Max: 57 Gal

Features

- Ergonomic bathing well for comfort
- Sculpted armrests
- Can be used in an undermount or drop-in application
- Pre-leveled wood base makes installation easier
- Slip resistant textured floor for safety
- Universal drain
- Premium cast acrylic surface
- Whirlpool Features:
- Pneumatic on/off control
- 8 hydrotherapy jets: High-flow directional and Low-profile spinning micro-jets
- Whirlpool pump
- Safety suction system
- Air Bath Features:
- Pneumatic on/off control
- Perimeter air system
- Single-speed heated-air blower with automated purge and dry cycle

BELMONT I STOCKING - PRICING CATEGORY : HV

SKU	System	Color	Configuration	Dimensions & Weight	MSRP
3960620-BI	Soaker - No System	Biscuit	Universal	59 1/8” x 40 3/16” x 23 7/8” / 154 lb 1502mm x 1021mm x 606mm / 69.84 kg	$ 1451
3960620-WH		White			$ 1416
3960620A-BI	Air Massage	Biscuit			$ 2588
3960620A-WH		White			$ 2553
3960621-BI	Whirlpool Massage	Biscuit			$ 2416
3960621-WH		White			$ 2381

OPTIONS

SKU	Description	MSRP
CDOBCD	Cable drive waste & overflow kit Available finishes: White **(WH)**, Biscuit **(BI)**, Chrome **(CH)**, Polished Brass **(BR)**, Brushed Nickel **(SN)**, Oil rubbed bronze **(OB)**,	$ 625
CDWHCD	Cable drive waste & overflow kit Available finishes: White **(WH)**, Biscuit **(BI)**, Chrome **(CH)**, Polished Brass **(BR)**, Brushed Nickel **(SN)**, Oil rubbed bronze **(OB)**,	$ 554
CDBRCD	Cable drive waste & overflow kit Available finishes: White **(WH)**, Biscuit **(BI)**, Chrome **(CH)**, Polished Brass **(BR)**, Brushed Nickel **(SN)**, Oil rubbed bronze **(OB)**,	$ 625

OPTIONS

SKU	Description	MSRP
CDBICD	Cable drive waste & overflow kit Available finishes: White **(WH)**, Biscuit **(BI)**, Chrome **(CH)**, Polished Brass **(BR)**, Brushed Nickel **(SN)**, Oil rubbed bronze **(OB)**,	$ 554
CDSNCD		$ 625
CDCHCD		$ 490
8095HEATER	Factory installed inline heater Applicable to whirlpools only	$ 541
HTH1		$ 568

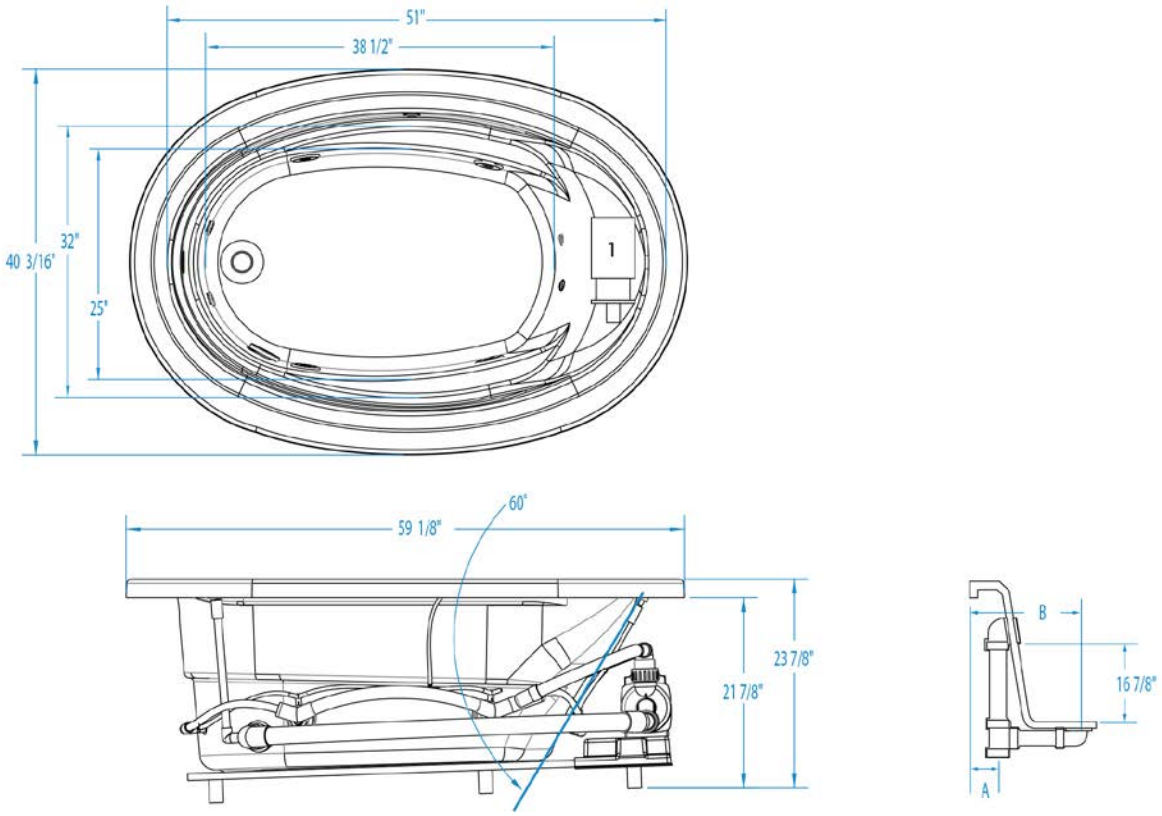
51"
38 1/2"
40 3/16"
32"
25"
1
59 1/8"
60°
23 7/8"
21 7/8"
B
16 7/8"
A

Belmont II Elements



Material : Premium Cast Acrylic

Min: 50 Gal
Max: 88 Gal

Features

- Ergonomic bathing well for comfort
- Sculpted armrests
- Can be used in an undermount or drop-in application
- Pre-leveled wood base makes installation easier
- Slip resistant textured floor for safety
- Universal drain
- Premium cast acrylic surface
- Whirlpool Features:
- Pneumatic on/off control
- 6 directional hydrotherapy jets
- Whirlpool pump
- Safety suction system

BELMONT II ELEMENTS - PRICING CATEGORY : HE

SKU	System	Color	Configuration	Dimensions & Weight	MSRP
4072620V-BI	Soaker - No System	Biscuit	Universal	71” x 41 1/2” x 23 7/8” / 169 lb 1803mm x 1054mm x 606mm / 76.64 kg	$ 941
4072620V-WH		White			$ 906
4072621V-BI	Whirlpool Massage	Biscuit			$ 1553
4072621V-WH		White			$ 1518

OPTIONS

SKU	Description	MSRP
8095HEATER	Factory installed inline heater Applicable to whirlpools only	$ 541
HTH1	Factory installed inline heater Applicable to whirlpools only	$ 568
CRATE-ELEMENTS	Crating charge option for one at at time shipment Requires additional charges for freight collect shipment. Consult customer care	$ 73

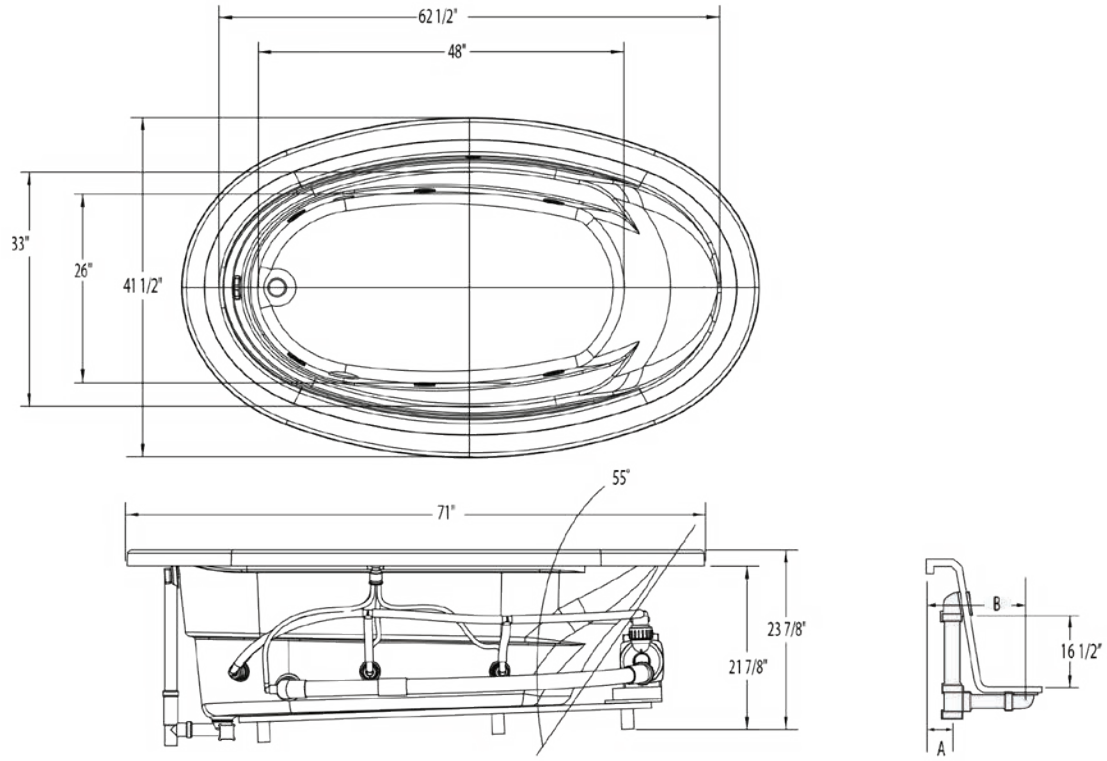
62 1/2"
48"
33"
26"
41 1/2"
55"
71"
23 7/8"
21 7/8"
B
16 1/2"
A

Belmont II Stocking





Material : Premium Cast Acrylic

Min: 50 Gal
Max: 67 Gal

Features

- Ergonomic bathing well for comfort
- Sculpted armrests
- Can be used in undermount or drop-in application
- Pre-leveled wood base makes installation easier
- Slip resistant textured floor for safety
- Universal drain
- Premium cast acrylic surface
- Whirlpool Features:
- Pneumatic on/off control
- 8 hydrotherapy jets: High-flow directional and Low-profile spinning micro-jets
- Whirlpool pump
- Safety suction system
- Air Bath Features:
- Pneumatic on/off control
- Perimeter air system
- Single-speed heated-air blower with automated purge and dry cycle

BELMONT II STOCKING - PRICING CATEGORY : HV

SKU	System	Color	Configuration	Dimensions & Weight	MSRP
4072620-BI	Soaker - No System	Biscuit	Universal	71” x 41 1/4” x 23 7/8” / 169 lb 1803mm x 1048mm x 606mm / 76.64 kg	$ 1571
4072620-WH		White			$ 1536
4072620A-BI	Air Massage	Biscuit			$ 2923
4072620A-WH		White			$ 2888
4072621-BI	Whirlpool Massage	Biscuit			$ 2662
4072621-WH		White			$ 2627

OPTIONS

SKU	Description	MSRP
CDOBCD	Cable drive waste & overflow kit Available finishes: White **(WH)**, Biscuit **(BI)**, Chrome **(CH)**, Polished Brass **(BR)**, Brushed Nickel **(SN)**, Oil rubbed bronze **(OB)**,	$ 625
CDWHCD	Cable drive waste & overflow kit Available finishes: White **(WH)**, Biscuit **(BI)**, Chrome **(CH)**, Polished Brass **(BR)**, Brushed Nickel **(SN)**, Oil rubbed bronze **(OB)**,	$ 554
CDBRCD	Cable drive waste & overflow kit Available finishes: White **(WH)**, Biscuit **(BI)**, Chrome **(CH)**, Polished Brass **(BR)**, Brushed Nickel **(SN)**, Oil rubbed bronze **(OB)**,	$ 625

OPTIONS

SKU	Description	MSRP
CDBICD	Cable drive waste & overflow kit Available finishes: White **(WH)**, Biscuit **(BI)**, Chrome **(CH)**, Polished Brass **(BR)**, Brushed Nickel **(SN)**, Oil rubbed bronze **(OB)**,	$ 554
CDSNCD		$ 625
CDCHCD		$ 490
8095HEATER	Factory installed inline heater Applicable to whirlpools only	$ 541
HTH1		$ 568

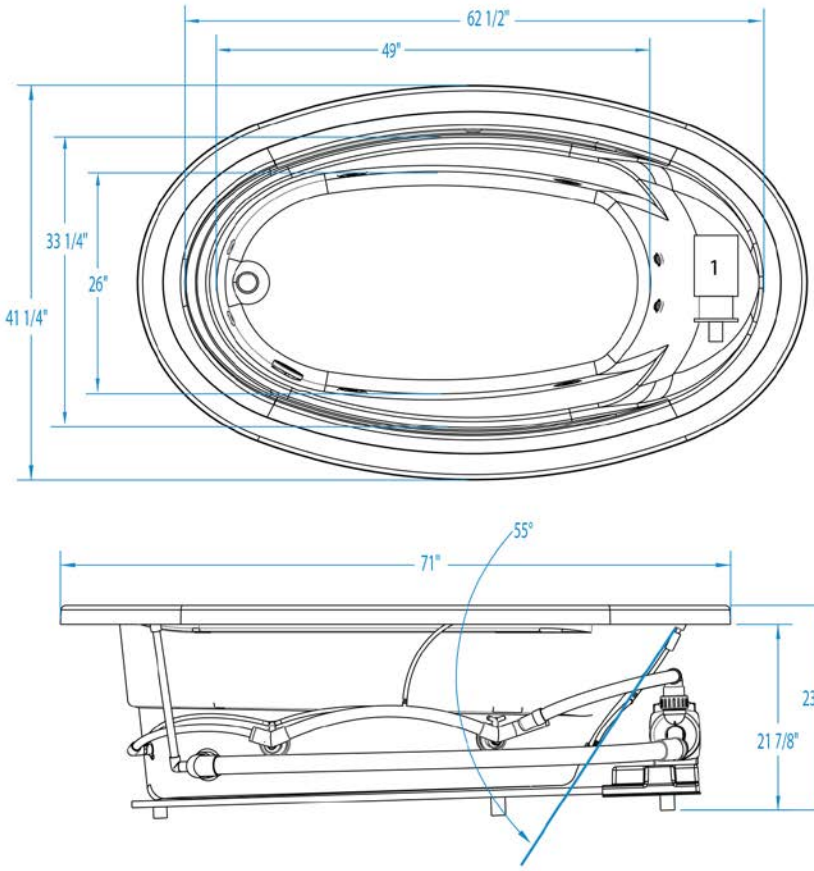
62 1/2"
49"
33 1/4"
26"
41 1/4"
1
55°
71"
23 7/8"
21 7/8"
B
16 1/2"
A

Cariani Elements



Material : Premium Cast Acrylic

Min: 60 Gal
Max: 74 Gal

Features

- Ergonomic bathing well for comfort
- Integral 19 in. skirt
- Integral tiling flange
- Sculpted armrests
- Slip resistant textured floor for safety
- Left or Right hand drain
- Premium cast acrylic surface
- Whirlpool Features:
- Pneumatic on/off control
- 6 directional hydrotherapy jets
- Whirlpool pump
- Safety suction system

CARIANI ELEMENTS - PRICING CATEGORY : HE

SKU	System	Color	Configuration	Dimensions & Weight	MSRP
8072620VL-BI	Soaker - No System	Biscuit	Left-hand Drain	72” x 42” x 19” / 191 lb 1829mm x 1067mm x 483mm / 86.62 kg	$ 1236
8072620VL-WH		White			$ 1201
8072620VR-BI		Biscuit	Right-hand Drain		$ 1236
8072620VR-WH		White			$ 1201
8072621VL-BI	Whirlpool Massage	Biscuit	Left-hand Drain		$ 2009
8072621VL-WH		White			$ 1974
8072621VR-BI		Biscuit	Right-hand Drain		$ 2009
8072621VR-WH		White			$ 1974

OPTIONS

SKU	Description	MSRP
8095HEATER	Factory installed inline heater Applicable to whirlpools only	$ 541
HTH1	Factory installed inline heater Applicable to whirlpools only	$ 568
CRATE-ELEMENTS	Crating charge option for one at at time shipment Requires additional charges for freight collect shipment. Consult customer care	$ 73

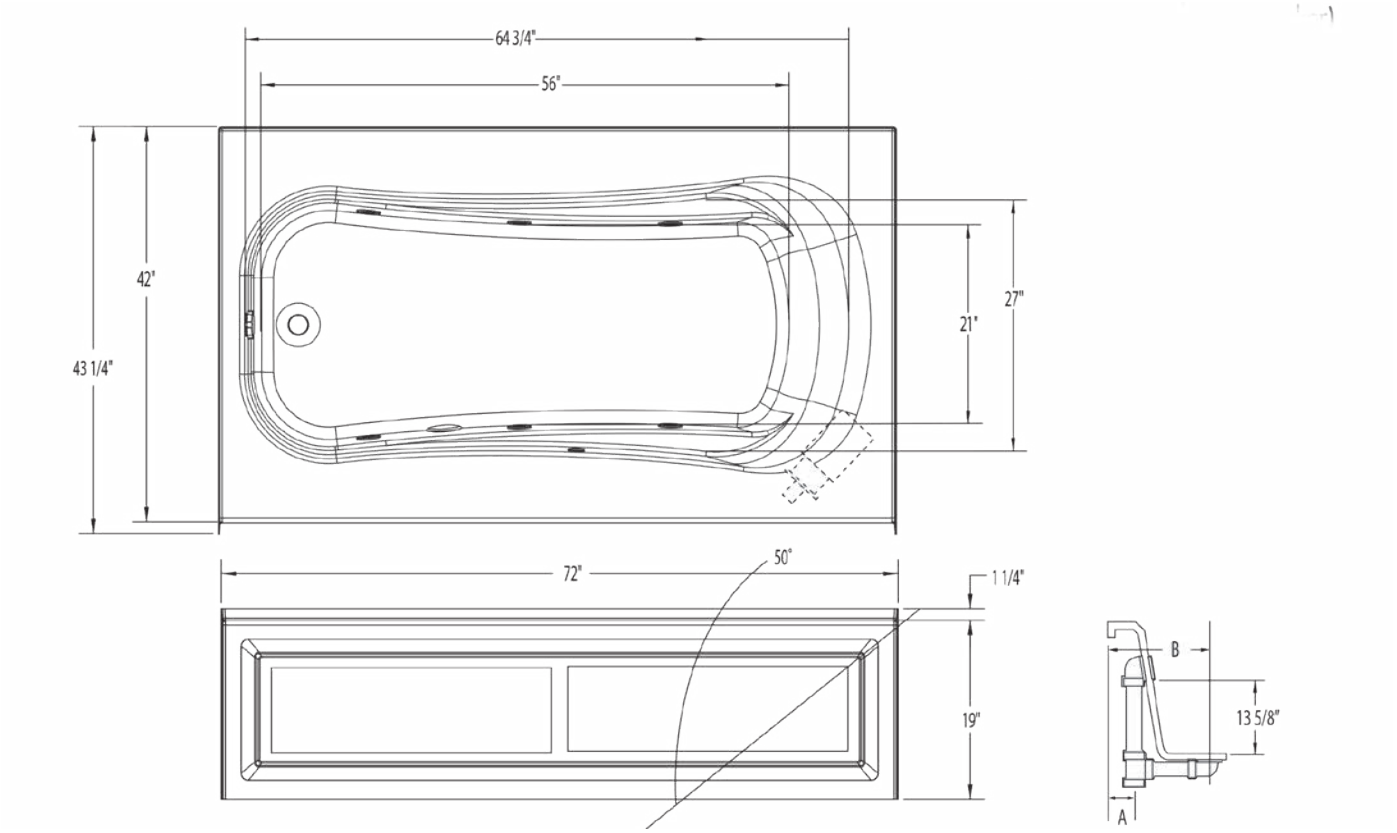
64 3/4"
56"
42"
43 1/4"
27"
21"
72"
50"
1 1/4"
19"
B
13 5/8"
A

Cariani Stocking





Material : Premium Cast Acrylic

Min: 60 Gal
Max: 74 Gal

Features

- Ergonomic bathing well for comfort
- Integral 19 in. skirt
- Removable access panels (whirlpool / air bath models)
- Sculpted armrests
- Pre-leveled wood base makes installation easier
- Slip resistant textured floor for safety
- Left or Right hand drain
- Premium cast acrylic surface
- Limited-10 year warranty
- Whirlpool Features:
- Pneumatic on/off control
- 8 hydrotherapy jets: High-flow directional and Low-profile spinning micro-jets
- Whirlpool pump
- Safety suction system
- Air Bath Features:
- Pneumatic on/off control
- Perimeter air system
- Single-speed heated-air blower with automated purge and dry cycle

CARIANI STOCKING - PRICING CATEGORY : HV

SKU	System	Color	Configuration	Dimensions & Weight	MSRP
8072620AL-BI	Air Massage	Biscuit	Left-hand Drain	72” x 42” x 19” / 191 lb 1829mm x 1067mm x 483mm / 86.62 kg	$ 3287
8072620AL-WH		White			$ 3252
8072620AR-BI		Biscuit	Right-hand Drain		$ 3287
8072620AR-WH		White			$ 3252
8072620L-BI	Soaker - No System	Biscuit	Left-hand Drain		$ 1792
8072620L-WH		White			$ 1757
8072620R-BI		Biscuit	Right-hand Drain		$ 1792
8072620R-WH		White			$ 1757
8072621L-BI	Whirlpool Massage	Biscuit	Left-hand Drain		$ 3033
8072621L-WH		White			$ 2998
8072621R-BI		Biscuit	Right-hand Drain		$ 3033

CARIANI STOCKING - PRICING CATEGORY : HV

SKU	System	Color	Configuration	Dimensions & Weight	MSRP
8072621R-WH	Whirlpool Massage	White	Right-hand Drain	72” x 42” x 19” / 191 lb 1829mm x 1067mm x 483mm / 86.62 kg	$ 2998

OPTIONS

SKU	Description	MSRP
PLL2	Pump location is applicable to whirlpools and blower location for air system No charge option Refer to technical drawing for applicable choices	$ 0
PLL3	Pump location is applicable to whirlpools and blower location for air system No charge option Refer to technical drawing for applicable choices	$ 0
PLL4	Pump location is applicable to whirlpools and blower location for air system No charge option Refer to technical drawing for applicable choices	$ 0
PLL5		$ 0
CDOBCD	Cable drive waste & overflow kit Available finishes: White **(WH)**, Biscuit **(BI)**, Chrome **(CH)**, Polished Brass **(BR)**, Brushed Nickel **(SN)**, Oil rubbed bronze **(OB)**,	$ 625
CDWHCD		$ 554
CDBRCD		$ 625
CDBICD		$ 554
CDSNCD		$ 625
CDCHCD		$ 490
8095HEATER	Factory installed inline heater Applicable to whirlpools only	$ 541
HTH1		$ 568

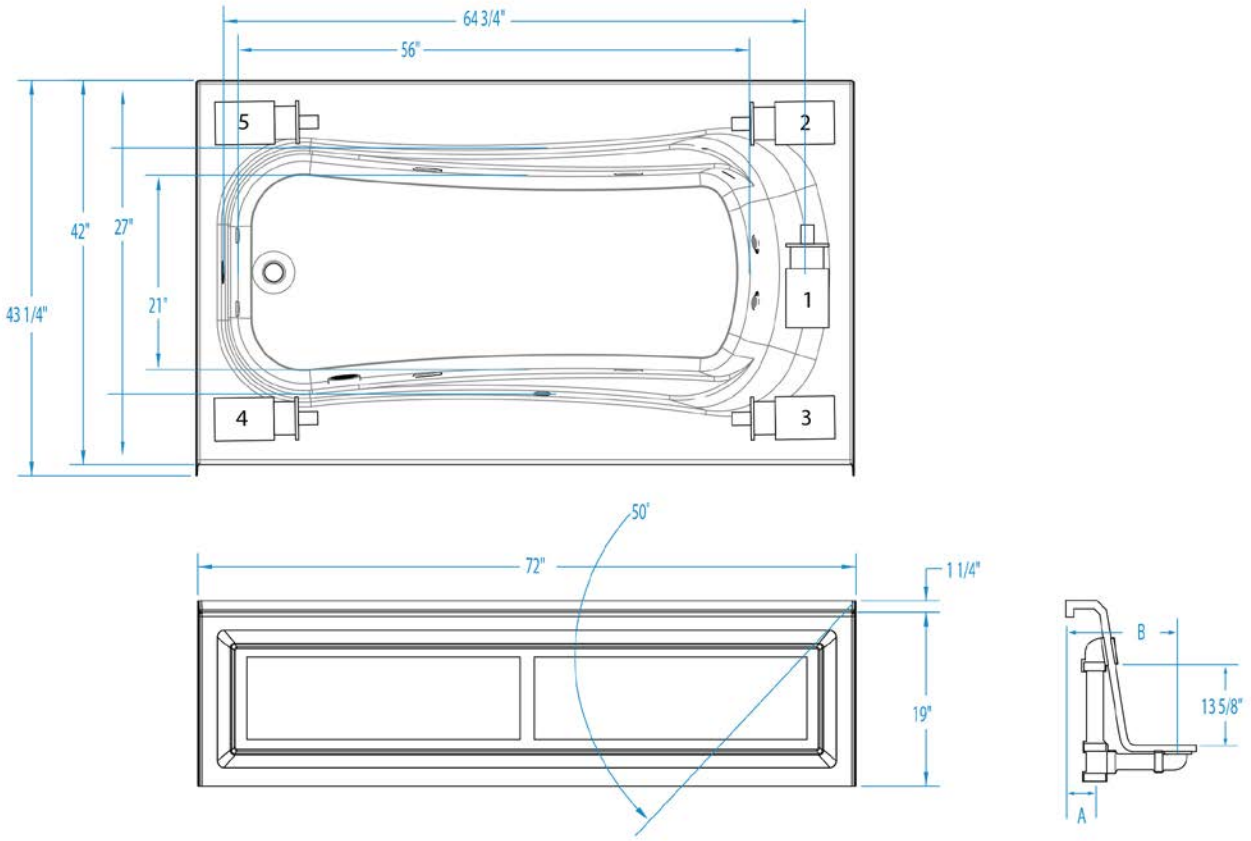
64 3/4"
56"
5
2
42"
27"
43 1/4"
21"
1
4
3
50°
72"
1 1/4"
19"
B
13 5/8"
A

Cavalcade Elements



Material : Premium Cast Acrylic

Min: 50 Gal
Max: 90 Gal

Features

- Ergonomic bathing well for comfort
- Sculpted armrests
- Can be used in an undermount or drop-in application
- Pre-leveled wood base makes installation easier
- Slip resistant textured floor for safety
- Center front drain
- Premium cast acrylic surface
- Whirlpool Features:
- Pneumatic on/off control
- 6 directional hydrotherapy jets
- Whirlpool pump
- Safety suction system

CAVALCADE ELEMENTS - PRICING CATEGORY : HE

SKU	System	Color	Configuration	Dimensions & Weight	MSRP
3860620V-BI	Soaker - No System	Biscuit	Center Front Drain	60” x 60” x 22” / 166 lb 1524mm x 1524mm x 559mm / 75.28 kg	$ 1143
3860620V-WH		White			$ 1108
3860621V-BI	Whirlpool Massage	Biscuit			$ 1754
3860621V-WH		White			$ 1719

OPTIONS

SKU	Description	MSRP
PLL2	Pump location is applicable to whirlpools and blower location for air system No charge option Refer to technical drawing for applicable choices	$ 0
6020CSK	Color matched acrylic corner skirt with removable access panel	$ 1269
8095HEATER	Factory installed inline heater Applicable to whirlpools only	$ 541
HTH1		$ 568
IF2T-BC	Factory installed Corner applications	$ 98

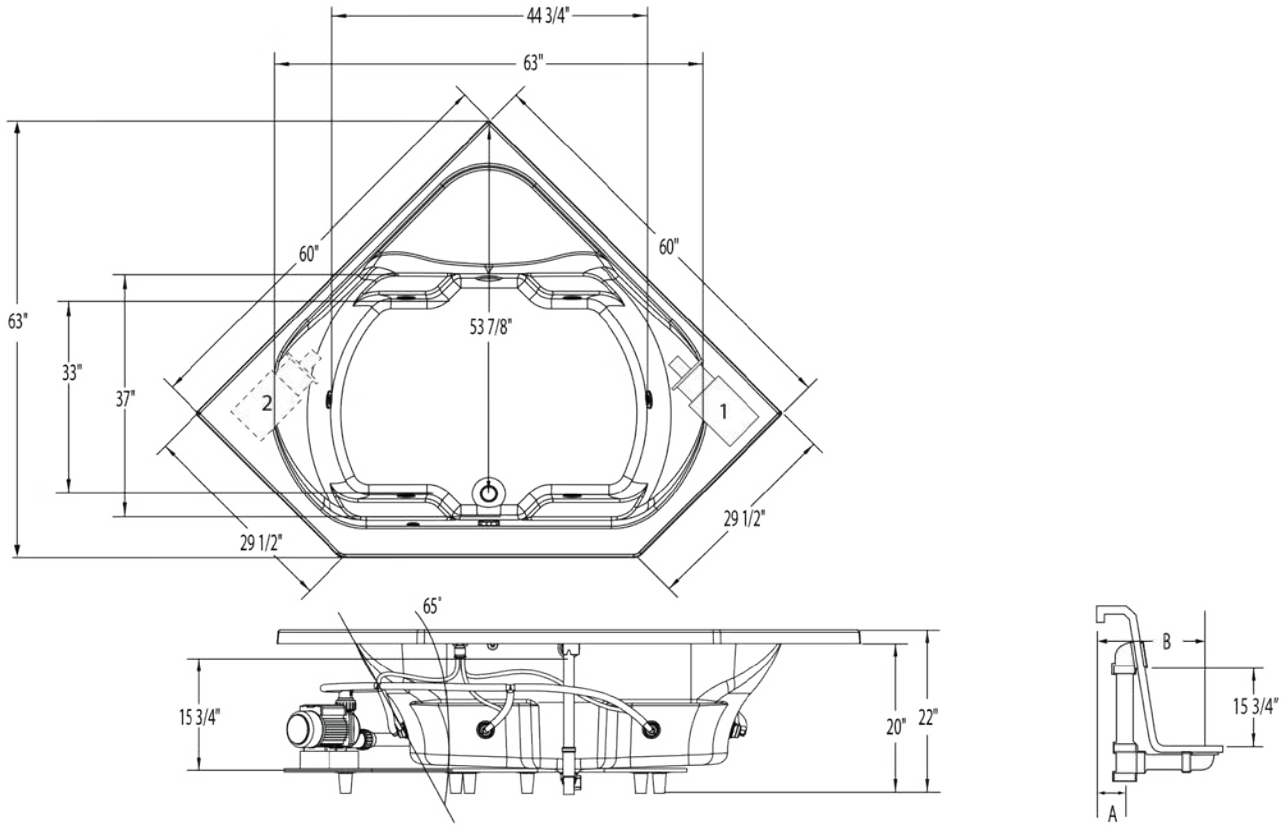
44 3/4"
63"
60"
60"
63"
33"
37"
53 7/8"
2
1
29 1/2"
29 1/2"
65°
15 3/4"
20"
22"
B
15 3/4"
A

Cavalcade Stocking



Material : Premium Cast Acrylic

Min: 50 Gal
Max: 90 Gal

Features

- Ergonomic bathing well for comfort
- Scuplted armrests
- Can be used in undermount or drop-in application
- Pre-leveled wood base makes installation easier
- Slip-resistant textured floor for safety
- Left or Right hand drain
- Premium cast acrylic surface
- Whirlpool Features:
- Pneumatic on/off control
- 8 hydrotherapy jets: High-flow directional and Low-profile spinning micro-jets
- Whirlpool pump
- Safety suction system
- Air Bath Features:
- Pneumatic on/off control
- Perimeter air system
- Single-speed heated-air blower with automated purge and dry cycle

CAVALCADE STOCKING - PRICING CATEGORY : HV

SKU	System	Color	Configuration	Dimensions & Weight	MSRP
3860620-BI	Soaker - No System	Biscuit	Center Front Drain	60” x 60” x 22” / 234 lb 1524mm x 1524mm x 559mm / 106.12 kg	$ 2006
3860620-WH		White			$ 1971
3860620A-BI	Air Massage	Biscuit			$ 3369
3860620A-WH		White			$ 3334
3860621-BI	Whirlpool Massage	Biscuit			$ 3027
3860621-WH		White			$ 2992

OPTIONS

SKU	Description	MSRP
PLL2	Pump location is applicable to whirlpools and blower location for air system No charge option Refer to technical drawing for applicable choices	$ 0
CDOBCD	Cable drive waste & overflow kit Available finishes: White **(WH)**, Biscuit **(BI)**, Chrome **(CH)**, Polished Brass **(BR)**, Brushed Nickel **(SN)**, Oil rubbed bronze **(OB)**,	$ 625
CDWHCD	Cable drive waste & overflow kit Available finishes: White **(WH)**, Biscuit **(BI)**, Chrome **(CH)**, Polished Brass **(BR)**, Brushed Nickel **(SN)**, Oil rubbed bronze **(OB)**,	$ 554

OPTIONS

SKU	Description	MSRP
CDBRCD	Cable drive waste & overflow kit Available finishes: White **(WH)**, Biscuit **(BI)**, Chrome **(CH)**, Polished Brass **(BR)**, Brushed Nickel **(SN)**, Oil rubbed bronze **(OB)**,	$ 625
CDBICD		$ 554
CDSNCD		$ 625
CDCHCD		$ 490
6020CSK	Color matched acrylic corner skirt with removable access panel	$ 1269
6020CFSK	Color matched acrylic fixed corner skirt (No access panel)	$ 1269
8095HEATER	Factory installed inline heater Applicable to whirlpools only	$ 541
HTH1		$ 568
IF2T-BC	Factory installed Corner applications	$ 98

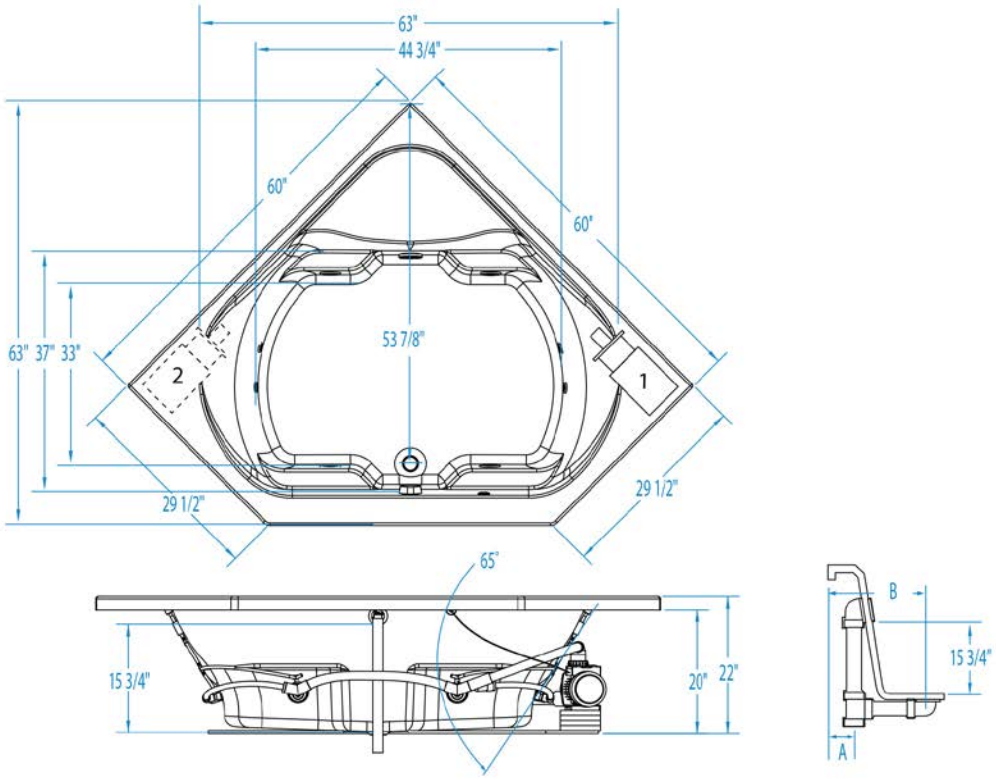
63"
44 3/4"
60"
60"
63"
37"
33"
53 7/8"
2
1
29 1/2"
29 1/2"
65°
15 3/4"
20"
22"
B
15 3/4"
A

Cooper 30 Stocking



Material : Premium Cast Acrylic

Min: 31 Gal
Max: 56 Gal

Features

- Ergonomic bathing well for comfort
- Extended 22 in. skirt for above-floor plumbing
- Stepped integral 3T tile flange
- Pre-leveled wood base makes installation easier
- Slip-resistant textured floor for safety
- Left or Right hand drain
- Premium cast acrylic surface
- Whirlpool Features:
- Pneumatic on/off control
- 8 hydrotherapy jets: High-flow directional and Low-profile spinning micro-jets
- Whirlpool pump
- Safety suction system

COOPER 30 STOCKING - PRICING CATEGORY : HV

SKU	System	Color	Configuration	Dimensions & Weight	MSRP
9460600QL-BI	Soaker - No System	Biscuit	Left-hand Drain	60” x 30” x 22 3/4” / 164 lb 1524mm x 762mm x 578mm / 74.38 kg	$ 1461
9460600QL-WH		White			$ 1426
9460600QR-BI		Biscuit	Right-hand Drain		$ 1461
9460600QR-WH		White			$ 1426
9460601QL-BI	Whirlpool Massage	Biscuit	Left-hand Drain		$ 3042
9460601QL-WH		White			$ 3007
9460601QR-BI		Biscuit	Right-hand Drain		$ 3042
9460601QR-WH		White			$ 3007

OPTIONS

SKU	Description	MSRP
CDOBCD	Cable drive waste & overflow kit Available finishes: White **(WH)**, Biscuit **(BI)**, Chrome **(CH)**, Polished Brass **(BR)**, Brushed Nickel **(SN)**, Oil rubbed bronze **(OB)**,	$ 625
CDWHCD	Cable drive waste & overflow kit Available finishes: White **(WH)**, Biscuit **(BI)**, Chrome **(CH)**, Polished Brass **(BR)**, Brushed Nickel **(SN)**, Oil rubbed bronze **(OB)**,	$ 554
CDBRCD	Cable drive waste & overflow kit Available finishes: White **(WH)**, Biscuit **(BI)**, Chrome **(CH)**, Polished Brass **(BR)**, Brushed Nickel **(SN)**, Oil rubbed bronze **(OB)**,	$ 625
CDBICD		$ 554
CDSNCD		$ 625
CDCHCD		$ 490

OPTIONS

SKU	Description	MSRP
CS19	Color matched acrylic 19 inch cut skirt Option available at no charge	$ 0
8095HEATER	Factory installed inline heater Applicable to whirlpools only	$ 541
HTH1		$ 568

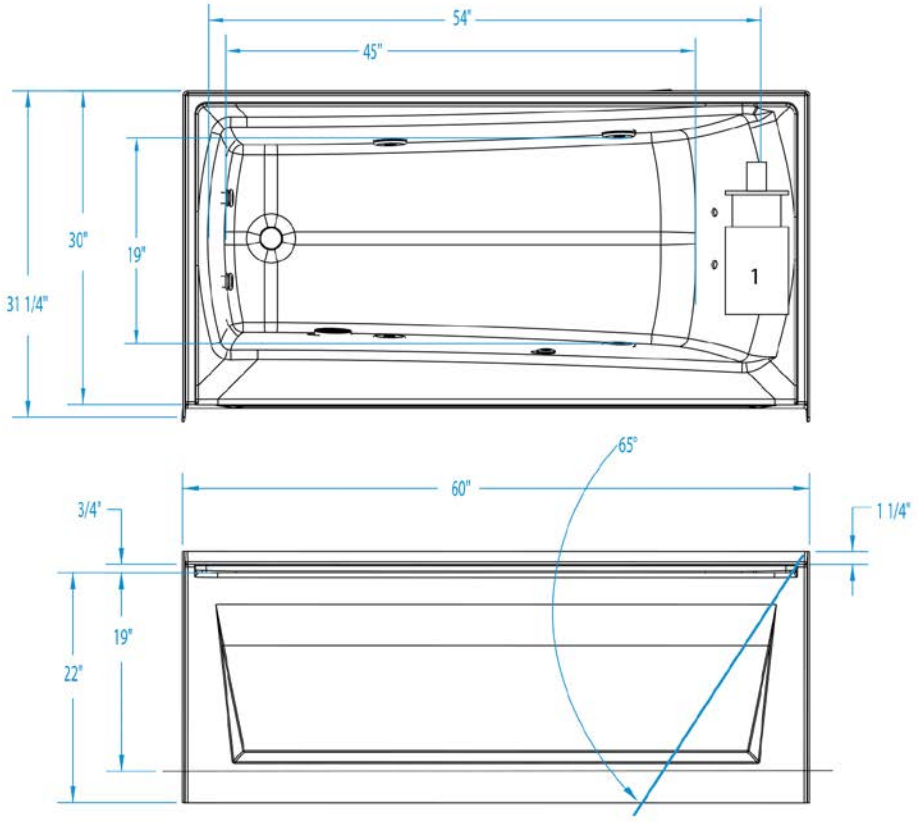
54"
45"
30"
19"
31 1/4"
1
65°
60"
3/4"
1 1/4"
19"
22"

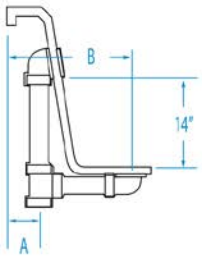
B
14"
A

Cooper 32 Stocking



Material : Premium Cast Acrylic

Min: 31 Gal
Max: 56 Gal

Features

- Ergonomic bathing well for comfort
- Extended 22 in. skirt for above-floor plumbing
- Stepped integral 3T tile flange
- Pre-leveled wood base makes installation easier
- Slip-resistant textured floor for safety
- Left or Right hand drain
- Premium cast acrylic surface
- Whirlpool Features:
- Pneumatic on/off control
- 8 hydrotherapy jets: High-flow directional and Low-profile spinning micro-jets
- Whirlpool pump
- Safety suction system

COOPER 32 STOCKING - PRICING CATEGORY : HV

SKU	System	Color	Configuration	Dimensions & Weight	MSRP
6960600QL-BI	Soaker - No System	Biscuit	Left-hand Drain	60” x 32” x 22 3/4” / 170 lb 1524mm x 813mm x 578mm / 77.1 kg	$ 1480
6960600QL-WH		White			$ 1445
6960600QR-BI		Biscuit	Right-hand Drain		$ 1480
6960600QR-WH		White			$ 1445
6960601QL-BI	Whirlpool Massage	Biscuit	Left-hand Drain		$ 3064
6960601QL-WH		White			$ 3029
6960601QR-BI		Biscuit	Right-hand Drain		$ 3064
6960601QR-WH		White			$ 3029

OPTIONS

SKU	Description	MSRP
CDOBCD	Cable drive waste & overflow kit Available finishes: White **(WH)**, Biscuit **(BI)**, Chrome **(CH)**, Polished Brass **(BR)**, Brushed Nickel **(SN)**, Oil rubbed bronze **(OB)**,	$ 625
CDWHCD	Cable drive waste & overflow kit Available finishes: White **(WH)**, Biscuit **(BI)**, Chrome **(CH)**, Polished Brass **(BR)**, Brushed Nickel **(SN)**, Oil rubbed bronze **(OB)**,	$ 554
CDBRCD	Cable drive waste & overflow kit Available finishes: White **(WH)**, Biscuit **(BI)**, Chrome **(CH)**, Polished Brass **(BR)**, Brushed Nickel **(SN)**, Oil rubbed bronze **(OB)**,	$ 625
CDBICD		$ 554
CDSNCD		$ 625
CDCHCD		$ 490

OPTIONS

SKU	Description	MSRP
CS19	Color matched acrylic 19 inch cut skirt Option available at no charge	$ 0
8095HEATER	Factory installed inline heater Applicable to whirlpools only	$ 541
HTH1		$ 568

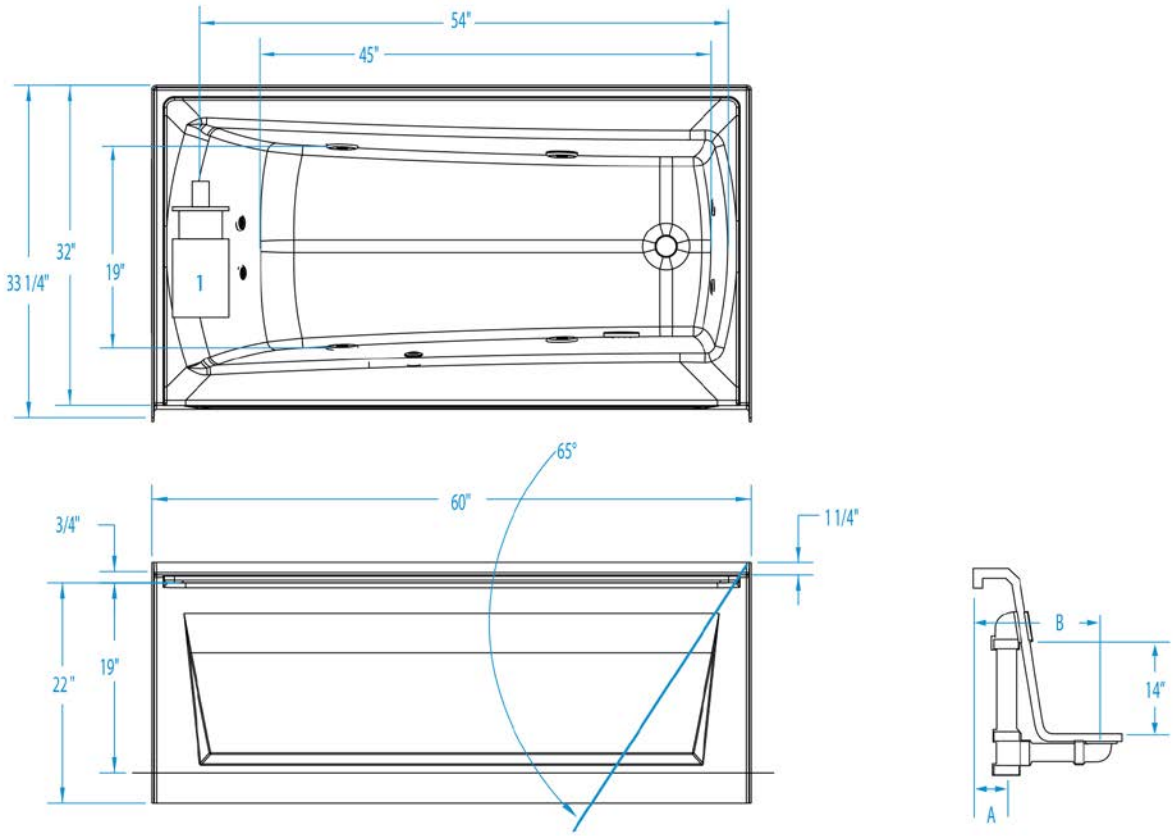
54"
45"
32"
33 1/4"
19"
1
65°
60"
3/4"
1 1/4"
22"
19"
B
14"
A

Davenport Elements





Material : Premium Cast Acrylic

Min: 58 Gal
Max: 63 Gal

Features

- Ergonomic bathing well for comfort
- Sculpted armrests
- Pre-leveled wood base makes installation easier
- Slip resistant textured floor for safety
- Universal drain
- Premium cast acrylic surface
- Whirlpool Features:
- Pneumatic on/off control
- 6 directional hydrotherapy jets
- Whirlpool pump
- Safety suction system

DAVENPORT ELEMENTS - PRICING CATEGORY : HE

SKU	System	Color	Configuration	Dimensions & Weight	MSRP
2460360V-BI	Soaker - No System	Biscuit	Universal	59” x 35 1/2” x 21 3/4” / 172 lb 1499mm x 902mm x 552mm / 78.0 kg	$ 870
2460360V-WH		White			$ 835
2460361V-BI	Whirlpool Massage	Biscuit			$ 1483
2460361V-WH		White			$ 1448

OPTIONS

SKU	Description	MSRP
LPNC-ELEMENTS	Alternate pump location Premium option for Elements whirlpools Specify at time of order; refer to drawing.	$ 66
LP45-ELEMENTS	Alternate pump location Premium option for Elements whirlpools Specify at time of order; refer to drawing.	$ 66
6020CSK	Color matched acrylic corner skirt with removable access panel	$ 1269
8095HEATER	Factory installed inline heater Applicable to whirlpools only	$ 541
HTH1		$ 568
IF3T-BC	Factory installed Drawing required at time of order to specify side	$ 98
IFLT-BC	Factory installed	$ 98
IFRT-BC		$ 98

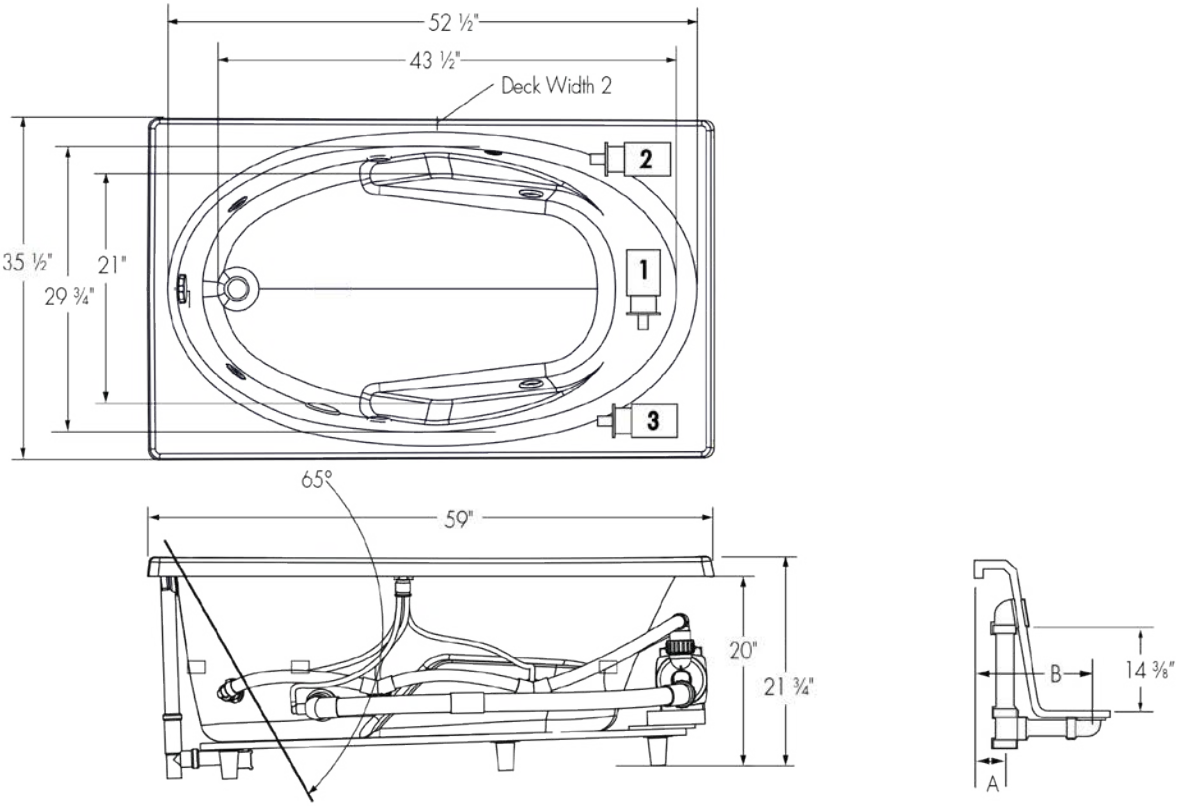
52 ½"
43 ½"
Deck Width 2
35 ½"
21"
29 ¾"
2
1
3
65°
59"
20"
21 ¾"
B
14 ⅜"
A

Davenport Stocking





Material : Premium Cast Acrylic

Min: 58 Gal
Max: 63 Gal

Features

- Ergonomic bathing well for comfort
- Sculpted armrests
- Pre-leveled wood base makes installation easier
- Slip resistant textured floor for safety
- Universal drain
- Premium cast acrylic surface
- Whirlpool Features:
- Pneumatic on/off control
- 8 hydrotherapy jets: High-flow directional and Low-profile spinning micro-jets
- Whirlpool pump
- Safety suction system
- Air Bath Features:
- Pneumatic on/off control
- Perimeter air system
- Single-speed heated-air blower with automated purge and dry cycle

DAVENPORT STOCKING - PRICING CATEGORY : HV

SKU	System	Color	Configuration	Dimensions & Weight	MSRP
2460360-BI	Soaker - No System	Biscuit	Universal	59” x 35 1/2” x 21 3/4” / 172 lb 1499mm x 902mm x 552mm / 78.0 kg	$ 1407
2460360-WH		White			$ 1372
2460360A-BI	Air Massage	Biscuit			$ 2516
2460360A-WH		White			$ 2481
2460361-BI	Whirlpool Massage	Biscuit			$ 2343
2460361-WH		White			$ 2308

OPTIONS

SKU	Description	MSRP
SKFRT5SE	Color matched 59 inch acrylic skirt with removable access panel	$ 1213
PLL2	Pump location is applicable to whirlpools and blower location for air system No charge option Refer to technical drawing for applicable choices	$ 0
PLL3	Pump location is applicable to whirlpools and blower location for air system No charge option Refer to technical drawing for applicable choices	$ 0

OPTIONS

SKU	Description	MSRP
CDOBCD	Cable drive waste & overflow kit Available finishes: White **(WH)**, Biscuit **(BI)**, Chrome **(CH)**, Polished Brass **(BR)**, Brushed Nickel **(SN)**, Oil rubbed bronze **(OB)**,	$ 625
CDWHCD		$ 554
CDBRCD		$ 625
CDBICD		$ 554
CDSNCD		$ 625
CDCHCD		$ 490
8095HEATER	Factory installed inline heater Applicable to whirlpools only	$ 541
HTH1		$ 568

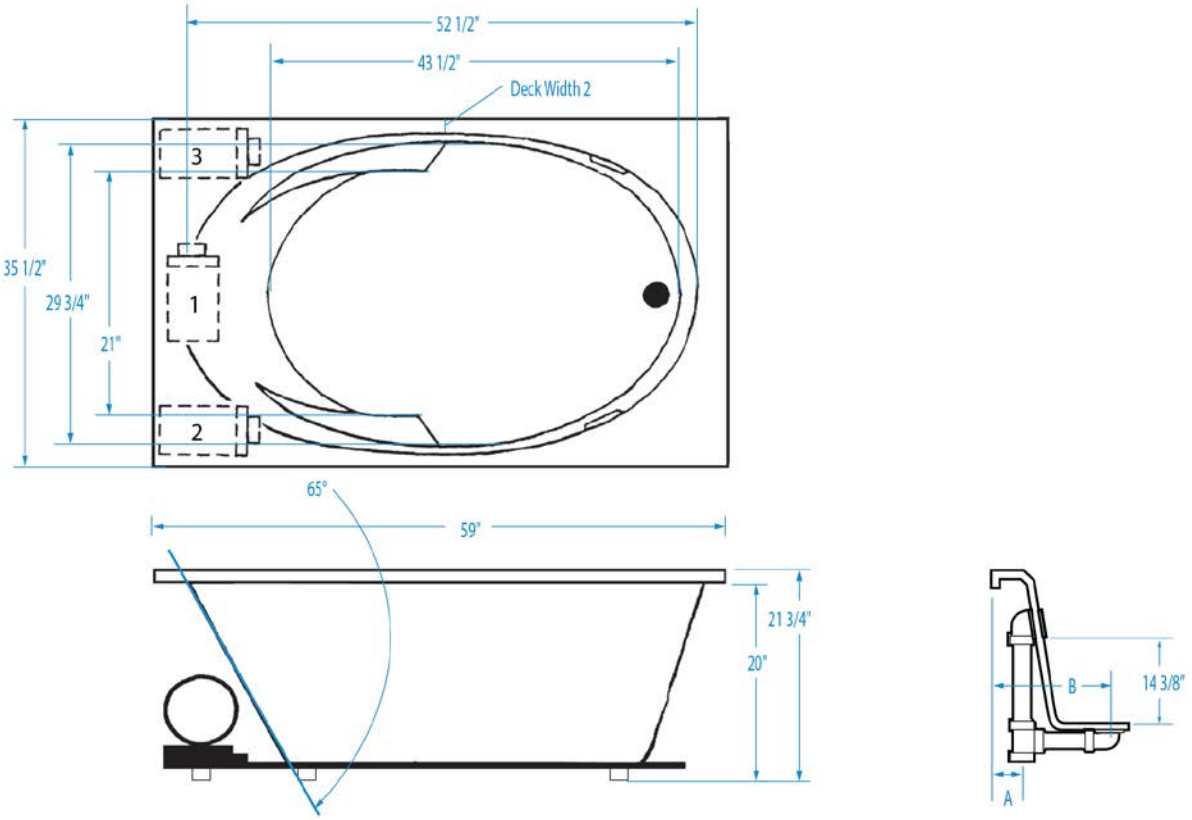
52 1/2"
43 1/2"
Deck Width 2
3
1
2
35 1/2"
29 3/4"
21"
65°
59"
21 3/4"
20"
B
14 3/8"
A

Derby Elements



Material : Premium Cast Acrylic

Min: 45 Gal
Max: 56 Gal

Features

- Ergonomic bathing well for comfort
- Sculpted armrests
- Can be used in an undermount or drop-in application
- Pre-leveled wood base makes installation easier
- Slip resistant textured floor for safety
- Universal drain
- Premium cast acrylic surface
- Whirlpool Features:
- Pneumatic on/off control
- 6 directional hydrotherapy jets
- Whirlpool pump
- Safety suction system

DERBY ELEMENTS - PRICING CATEGORY : HE

SKU	System	Color	Configuration	Dimensions & Weight	MSRP
3760620V-BI	Soaker - No System	Biscuit	Universal	60” x 32” x 20 1/2” / 160 lb 1524mm x 813mm x 521mm / 72.56 kg	$ 870
3760620V-WH		White			$ 835
3760621V-BI	Whirlpool Massage	Biscuit			$ 1483
3760621V-WH		White			$ 1448

OPTIONS

SKU	Description	MSRP
8095HEATER	Factory installed inline heater Applicable to whirlpools only	$ 541
HTH1	Factory installed inline heater Applicable to whirlpools only	$ 568
IF3T-BC	Factory installed Drawing required at time of order to specify side	$ 98

Derby Stocking



Material : Premium Cast Acrylic

Min: 45 Gal
Max: 50 Gal

Features

- Ergonomic bathing well for comfort
- Sculpted armrests
- Can be used in undermount or drop-in application
- Pre-leveled wood base makes installation easier
- Slip-resistant textured floor for safety
- Universal drain
- Premium cast acrylic surface
- Whirlpool Features:
- Pneumatic on/off control
- 8 hydrotherapy jets: High-flow directional and Low-profile spinning micro-jets
- Whirlpool pump
- Safety suction system
- Air Bath Features:
- Pneumatic on/off control
- Perimeter air system
- Single-speed heated-air blower with automated purge and dry cycle

DERBY STOCKING - PRICING CATEGORY : HV

SKU	System	Color	Configuration	Dimensions & Weight	MSRP
3760620-BI	Soaker - No System	Biscuit	Universal	60” x 32” x 20 1/2” / 160 lb 1524mm x 813mm x 521mm / 72.56 kg	$ 1266
3760620-WH		White			$ 1231
3760620A-BI	Air Massage	Biscuit			$ 2569
3760620A-WH		White			$ 2534
3760621-BI	Whirlpool Massage	Biscuit			$ 1881
3760621-WH		White			$ 1846

OPTIONS

SKU	Description	MSRP
CDOBCD	Cable drive waste & overflow kit Available finishes: White **(WH)**, Biscuit **(BI)**, Chrome **(CH)**, Polished Brass **(BR)**, Brushed Nickel **(SN)**, Oil rubbed bronze **(OB)**,	$ 625
CDWHCD	Cable drive waste & overflow kit Available finishes: White **(WH)**, Biscuit **(BI)**, Chrome **(CH)**, Polished Brass **(BR)**, Brushed Nickel **(SN)**, Oil rubbed bronze **(OB)**,	$ 554
CDBRCD	Cable drive waste & overflow kit Available finishes: White **(WH)**, Biscuit **(BI)**, Chrome **(CH)**, Polished Brass **(BR)**, Brushed Nickel **(SN)**, Oil rubbed bronze **(OB)**,	$ 625

OPTIONS

SKU	Description	MSRP
CDBICD	Cable drive waste & overflow kit Available finishes: White **(WH)**, Biscuit **(BI)**, Chrome **(CH)**, Polished Brass **(BR)**, Brushed Nickel **(SN)**, Oil rubbed bronze **(OB)**,	$ 554
CDSNCD		$ 625
CDCHCD		$ 490
8095HEATER	Factory installed inline heater Applicable to whirlpools only	$ 541
HTH1		$ 568
IF3T-BC	Factory installed Drawing required at time of order to specify side	$ 98

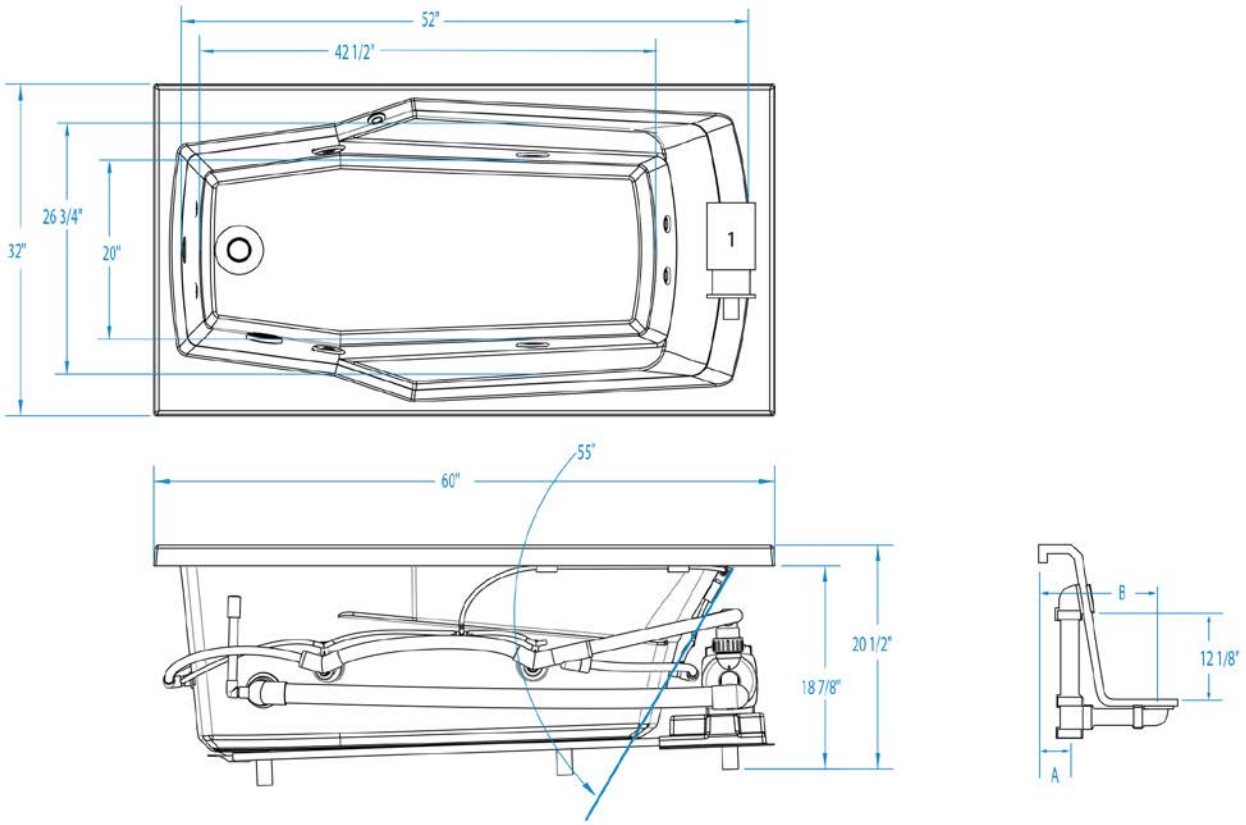
52"
42 1/2"
26 3/4"
32"
20"
1
60"
55°
20 1/2"
18 7/8"
B
12 1/8"
A

Dossi 30 Elements



Material : Premium Cast Acrylic

Min: 53 Gal
Max: 53 Gal

Features

- Ergonomic bathing well for comfort
- Integral 19 in. skirt
- Integral tiling flange
- Slip resistant textured floor for safety
- Left or Right hand drain
- Premium cast acrylic surface
- Whirlpool Features:
- Pneumatic on/off control
- 6 directional hydrotherapy jets
- Whirlpool pump
- Safety suction system

DOSSI 30 ELEMENTS - PRICING CATEGORY : HE

SKU	System	Color	Configuration	Dimensions & Weight	MSRP
7160620VL-BI	Soaker - No System	Biscuit	Left-hand Drain	60” x 30” x 19” / 95 lb 1524mm x 762mm x 483mm / 43.08 kg	$ 941
7160620VL-WH		White			$ 906
7160620VR-BI		Biscuit	Right-hand Drain		$ 941
7160620VR-WH		White			$ 906
7160621VL-BI	Whirlpool Massage	Biscuit	Left-hand Drain		$ 1553
7160621VL-WH		White			$ 1518
7160621VR-BI		Biscuit	Right-hand Drain		$ 1553
7160621VR-WH		White			$ 1518

OPTIONS

SKU	Description	MSRP
8095HEATER	Factory installed inline heater Applicable to whirlpools only	$ 541
HTH1	Factory installed inline heater Applicable to whirlpools only	$ 568
CRATE-ELEMENTS	Crating charge option for one at at time shipment Requires additional charges for freight collect shipment. Consult customer care	$ 73

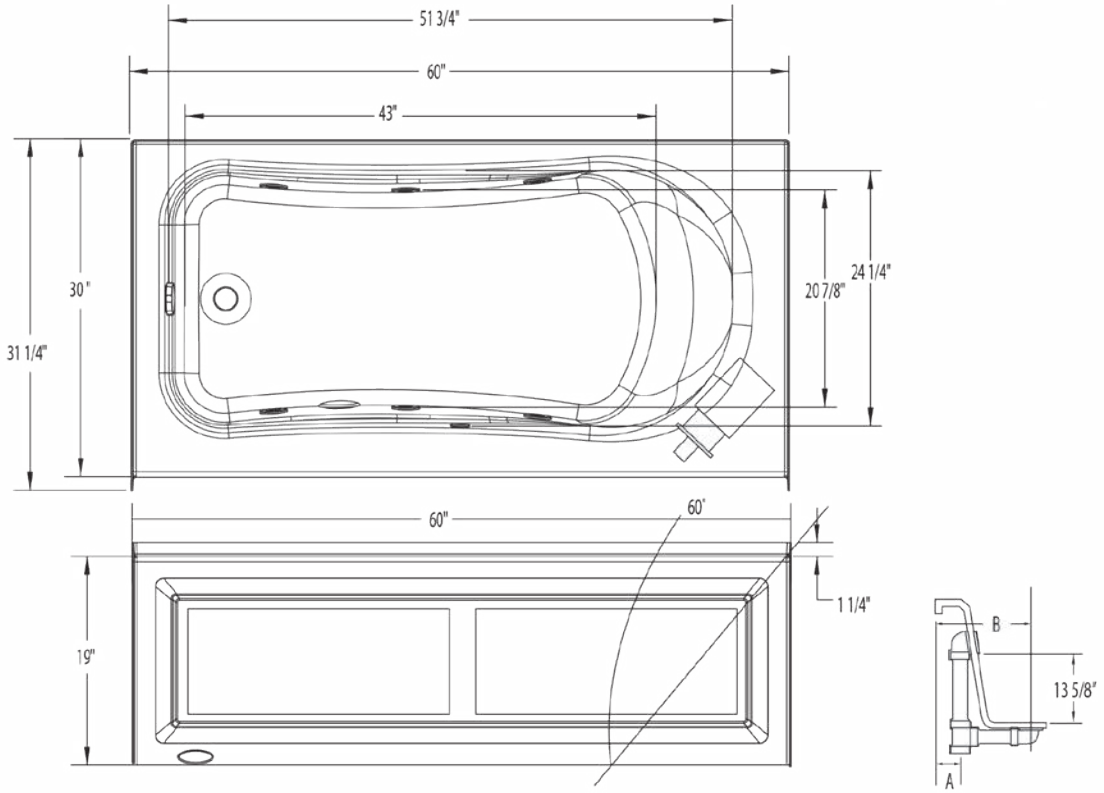
51 3/4"
60"
43"
30"
31 1/4"
20 7/8"
24 1/4"
60"
60"
19"
1 1/4"
B
13 5/8"
A

Dossi 30 Stocking



Material : Premium Cast Acrylic

Max: 53 Gal

Features

- Ergonomic bathing well for comfort
- Integral 19 in. skirt
- Integral tiling flange
- Pre-leveled wood base makes installation easier
- Slip-resistant textured floor for safety
- Left or Right hand drain
- Premium cast acrylic surface

DOSSI 30 STOCKING - PRICING CATEGORY : HV

SKU	System	Color	Configuration	Dimensions & Weight	MSRP
7160620L-BI	Soaker - No System	Biscuit	Left-hand Drain	60” x 30” x 19” / 95 lb 1524mm x 762mm x 483mm / 43.08 kg	$ 1261
7160620L-WH		White			$ 1226
7160620R-BI		Biscuit	Right-hand Drain		$ 1261
7160620R-WH		White			$ 1226

OPTIONS

SKU	Description	MSRP
CDOBCD	Cable drive waste & overflow kit Available finishes: White **(WH)**, Biscuit **(BI)**, Chrome **(CH)**, Polished Brass **(BR)**, Brushed Nickel **(SN)**, Oil rubbed bronze **(OB)**,	$ 625
CDWHCD	Cable drive waste & overflow kit Available finishes: White **(WH)**, Biscuit **(BI)**, Chrome **(CH)**, Polished Brass **(BR)**, Brushed Nickel **(SN)**, Oil rubbed bronze **(OB)**,	$ 554
CDBRCD	Cable drive waste & overflow kit Available finishes: White **(WH)**, Biscuit **(BI)**, Chrome **(CH)**, Polished Brass **(BR)**, Brushed Nickel **(SN)**, Oil rubbed bronze **(OB)**,	$ 625
CDBICD		$ 554
CDSNCD		$ 625
CDCHCD		$ 490

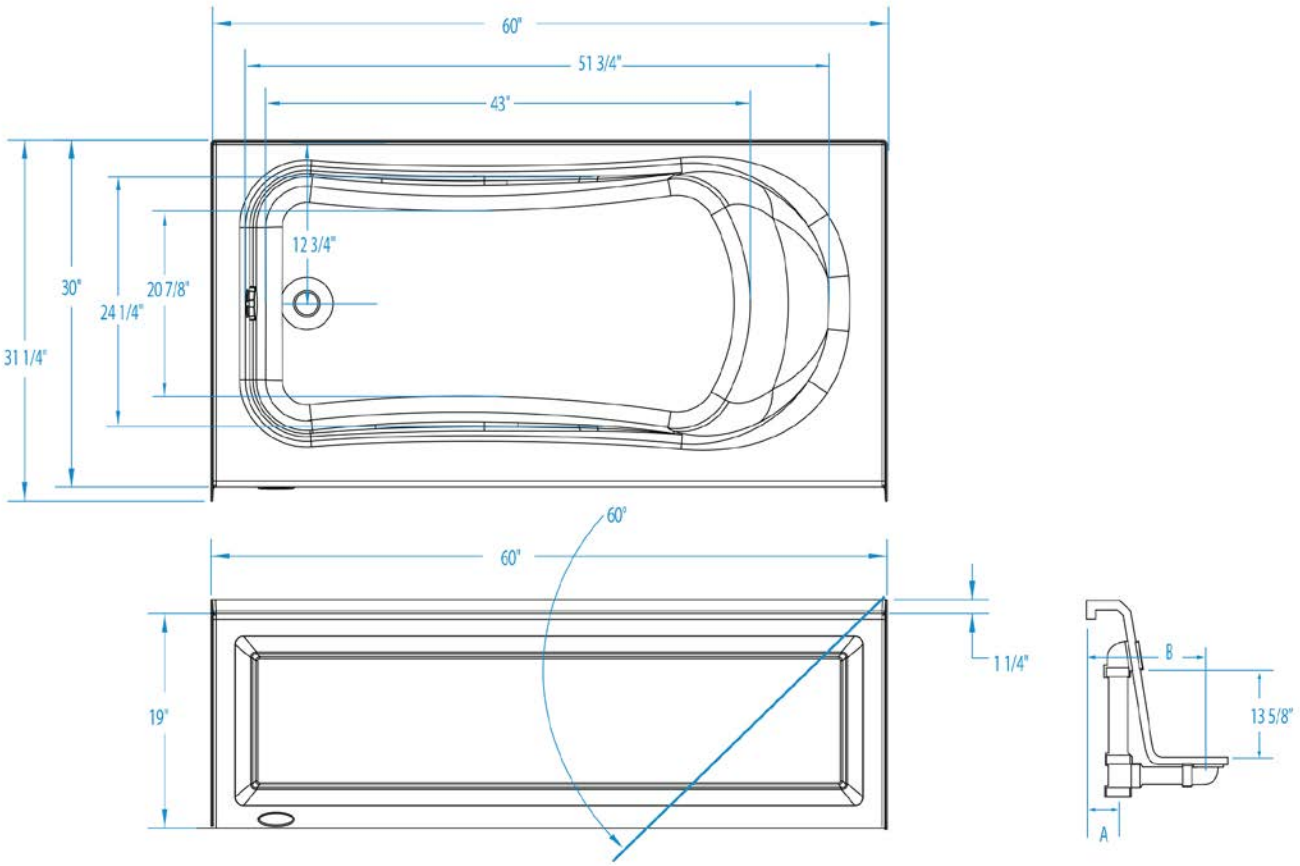
60"
51 3/4"
43"
12 3/4"
30"
20 7/8"
24 1/4"
31 1/4"
60"
60"
19"
1 1/4"
B
13 5/8"
A

Dossi 32 Elements





Material : Premium Cast Acrylic

Min: 53 Gal
Max: 53 Gal

Features

- Ergonomic bathing well for comfort
- Integral 19 in. skirt
- Integral tiling flange
- Slip resistant textured floor for safety
- Left or Right hand drain
- Premium cast acrylic surface
- Whirlpool Features:
- Pneumatic on/off control
- 6 directional hydrotherapy jets
- Whirlpool pump
- Safety suction system

DOSSI 32 ELEMENTS - PRICING CATEGORY : HE

SKU	System	Color	Configuration	Dimensions & Weight	MSRP
7460620VL-BI	Soaker - No System	Biscuit	Left-hand Drain	60” x 32” x 19” / 162 lb 1524mm x 813mm x 483mm / 73.47 kg	$ 941
7460620VL-WH		White			$ 906
7460620VR-BI		Biscuit	Right-hand Drain		$ 941
7460620VR-WH		White			$ 906
7460621VL-BI	Whirlpool Massage	Biscuit	Left-hand Drain		$ 1553
7460621VL-WH		White			$ 1518
7460621VR-BI		Biscuit	Right-hand Drain		$ 1553
7460621VR-WH		White			$ 1518

OPTIONS

SKU	Description	MSRP
8095HEATER	Factory installed inline heater Applicable to whirlpools only	$ 541
HTH1	Factory installed inline heater Applicable to whirlpools only	$ 568
CRATE-ELEMENTS	Crating charge option for one at at time shipment Requires additional charges for freight collect shipment. Consult customer care	$ 73

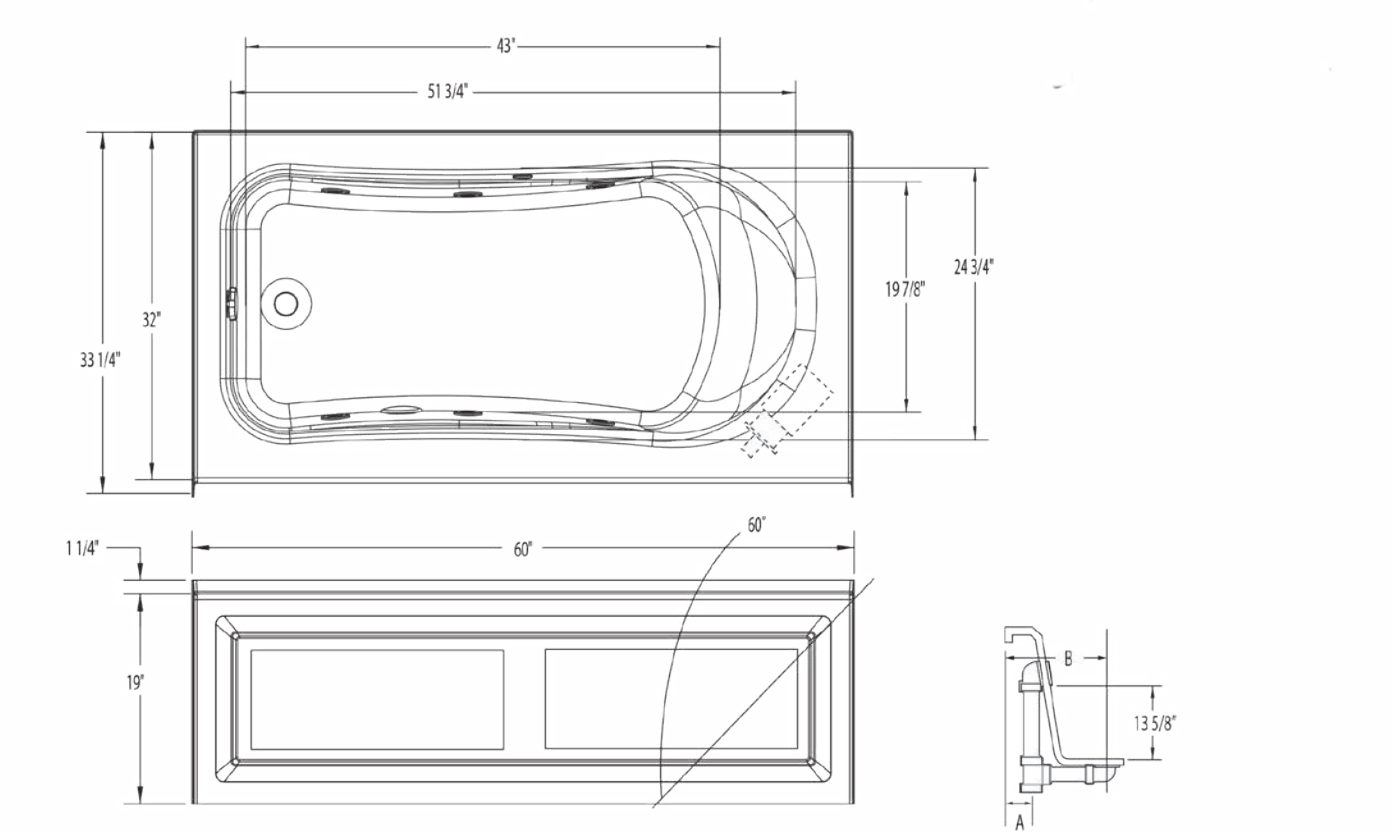
43"
51 3/4"
33 1/4"
32"
19 7/8"
24 3/4"
1 1/4"
60"
60"
19"
B
13 5/8"
A

Dossi 32 Stocking





Material : Premium Cast Acrylic

Min: 53 Gal
Max: 53 Gal

Features

- Ergonomic bathing well for comfort
- Integral 19 in. Skirt
- Pre-leveled wood base makes installation easier
- Slip-resistant textured floor for safety
- Left or Right Hand drain
- Premium cast acrylic surface
- Whirlpool Features:
- Pneumatic on/off control
- 8 hydrotherapy jets: High-flow directional and Low-profile spinning micro-jets
- Whirlpool pump
- Safety suction system
- Air Bath Features:
- Pneumatic on/off control
- Perimeter air system
- Single-speed heated-air blower with automated purge and dry cycle

DOSSI 32 STOCKING - PRICING CATEGORY : HV

SKU	System	Color	Configuration	Dimensions & Weight	MSRP
7460620AL-BI	Air Massage	Biscuit	Left-hand Drain	60” x 32” x 19” / 162 lb 1524mm x 813mm x 483mm / 73.47 kg	$ 2672
7460620AL-WH		White			$ 2637
7460620AR-BI		Biscuit	Right-hand Drain		$ 2672
7460620AR-WH		White			$ 2637
7460620L-BI	Soaker - No System	Biscuit	Left-hand Drain		$ 1261
7460620L-WH		White			$ 1226
7460620R-BI		Biscuit	Right-hand Drain		$ 1261
7460620R-WH		White			$ 1226
7460621L-BI	Whirlpool Massage	Biscuit	Left-hand Drain		$ 2512
7460621L-WH		White			$ 2477
7460621R-BI		Biscuit	Right-hand Drain		$ 2512
7460621R-WH		White			$ 2477

OPTIONS

SKU	Description	MSRP
PLL2	Pump location is applicable to whirlpools and blower location for air system No charge option Refer to technical drawing for applicable choices	$ 0
CDOBCD	Cable drive waste & overflow kit Available finishes: White **(WH)**, Biscuit **(BI)**, Chrome **(CH)**, Polished Brass **(BR)**, Brushed Nickel **(SN)**, Oil rubbed bronze **(OB)**,	$ 625
CDWHCD	Cable drive waste & overflow kit Available finishes: White **(WH)**, Biscuit **(BI)**, Chrome **(CH)**, Polished Brass **(BR)**, Brushed Nickel **(SN)**, Oil rubbed bronze **(OB)**,	$ 554
CDBRCD		$ 625
CDBICD		$ 554
CDSNCD		$ 625
CDCHCD		$ 490
8095HEATER	Factory installed inline heater Applicable to whirlpools only	$ 541
HTH1		$ 568

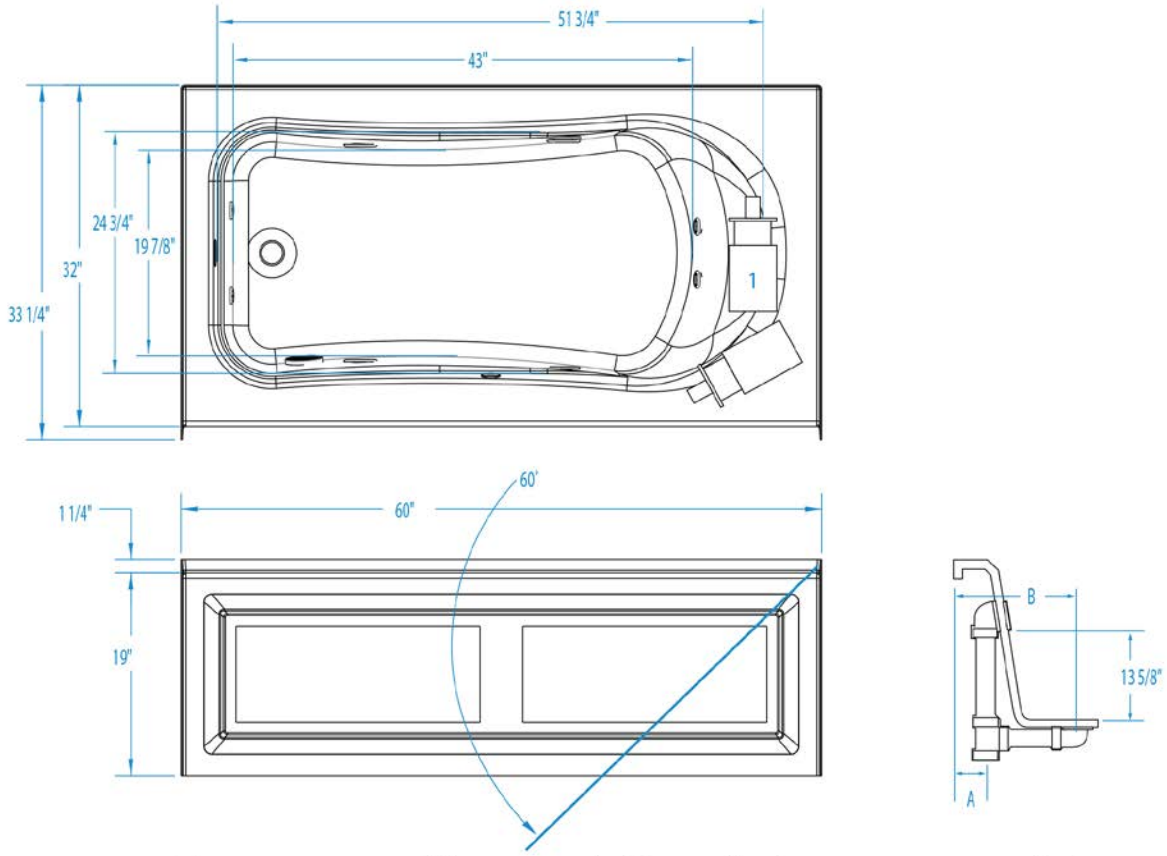
51 3/4"
43"
24 3/4"
19 7/8"
32"
33 1/4"
1
1 1/4"
60"
60°
19"
B
13 5/8"
A

Hialeah II Elements



Material : Premium Cast Acrylic

Min: 47 Gal
Max: 113 Gal

Features

- Ergonomic bathing well for comfort
- Sculpted armrests
- Pre-leveled wood base makes installation easier
- Slip resistant textured floor for safety
- Center front drain
- Premium cast acrylic surface
- Whirlpool Features:
- Pneumatic on/off control
- 6 directional hydrotherapy jets
- Whirlpool pump
- Safety suction system

HIALEAH II ELEMENTS - PRICING CATEGORY : HE

SKU	System	Color	Configuration	Dimensions & Weight	MSRP
6472620V-BI	Soaker - No System	Biscuit	Center Front Drain	72 1/4" x 42 1/4" x 23 1/2" / 183 lb 1835mm x 1073mm x 597mm / 82.99 kg	$ 998
6472620V-WH		White			$ 963
6472621V-BI	Whirlpool Massage	Biscuit			$ 1681
6472621V-WH		White			$ 1646

OPTIONS

SKU	Description	MSRP
72ACSK	Color matched 72 inch acrylic skirt with removable access panel	$ 1269
8095HEATER	Factory installed inline heater Applicable to whirlpools only	$ 541
HTH1	Factory installed inline heater Applicable to whirlpools only	$ 568
IF3T-BC	Factory installed Drawing required at time of order to specify side	$ 98

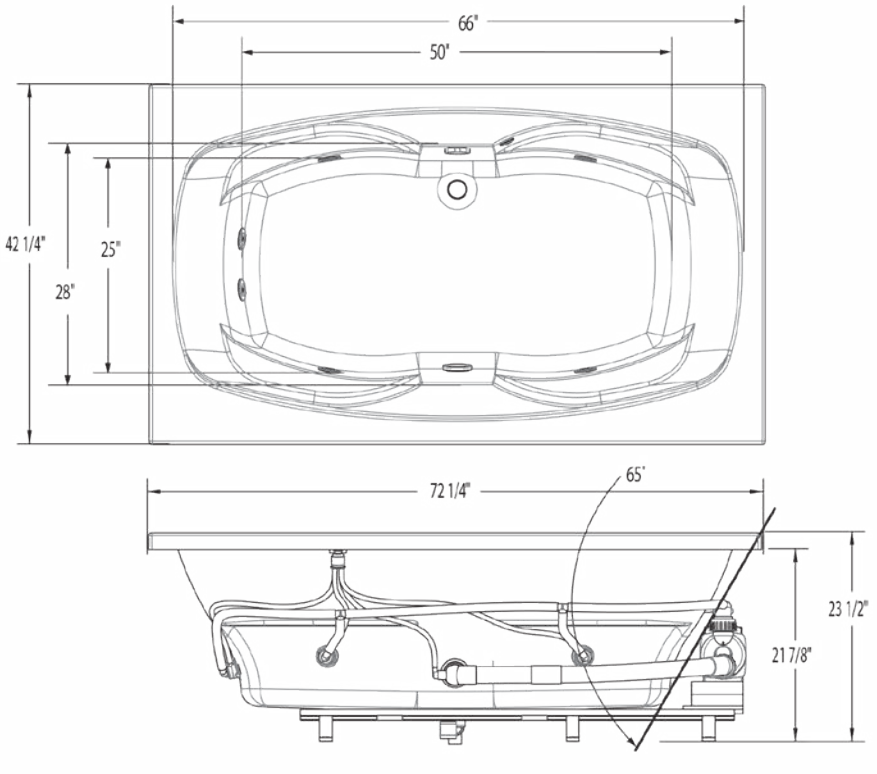
66"
50"
42 1/4"
25"
28"
72 1/4"
65"
23 1/2"
21 7/8"

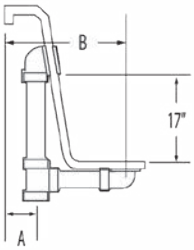
B
17"
A

Hialeah II Stocking



Material : Premium Cast Acrylic

Min: 47 Gal
Max: 72 Gal

Features

- Ergonomic bathing well for comfort
- Sculpted armrests
- Pre-leveled wood base makes installation easier
- Slip-resistant textured floor for safety
- Center Front drain
- Lucite cast acrylic surface
- Whirlpool Features:
- Pneumatic on/off control
- 8 hydrotherapy jets: High-flow directional and Low-profile spinning micro-jets
- Whirlpool pump
- Safety suction system

HIALEAH II STOCKING - PRICING CATEGORY : HV

SKU	System	Color	Configuration	Dimensions & Weight	MSRP
6472620-BI	Soaker - No System	Biscuit	Center Front Drain	72 1/4" x 42 1/4" x 23 1/2" / 183 lb 1835mm x 1073mm x 597mm / 82.99 kg	$ 1647
6472620-WH		White			$ 1612
6472621-BI	Whirlpool Massage	Biscuit			$ 3122
6472621-WH		White			$ 3087

OPTIONS

SKU	Description	MSRP
72ACSK	Color matched 72 inch acrylic skirt with removable access panel	$ 1269
PLL2	Pump location is applicable to whirlpools and blower location for air system No charge option Refer to technical drawing for applicable choices	$ 0
CDOBCD	Cable drive waste & overflow kit Available finishes: White **(WH)**, Biscuit **(BI)**, Chrome **(CH)**, Polished Brass **(BR)**, Brushed Nickel **(SN)**, Oil rubbed bronze **(OB)**,	$ 625
CDWHCD		$ 554
CDBRCD		$ 625
CDBICD		$ 554
CDSNCD		$ 625
CDCHCD		$ 490
8095HEATER	Factory installed inline heater Applicable to whirlpools only	$ 541
HTH1		$ 568
IFBT-BC	Factory installed	$ 98

OPTIONS

SKU	Description	MSRP
IFFT-BC	Factory installed	$ 98

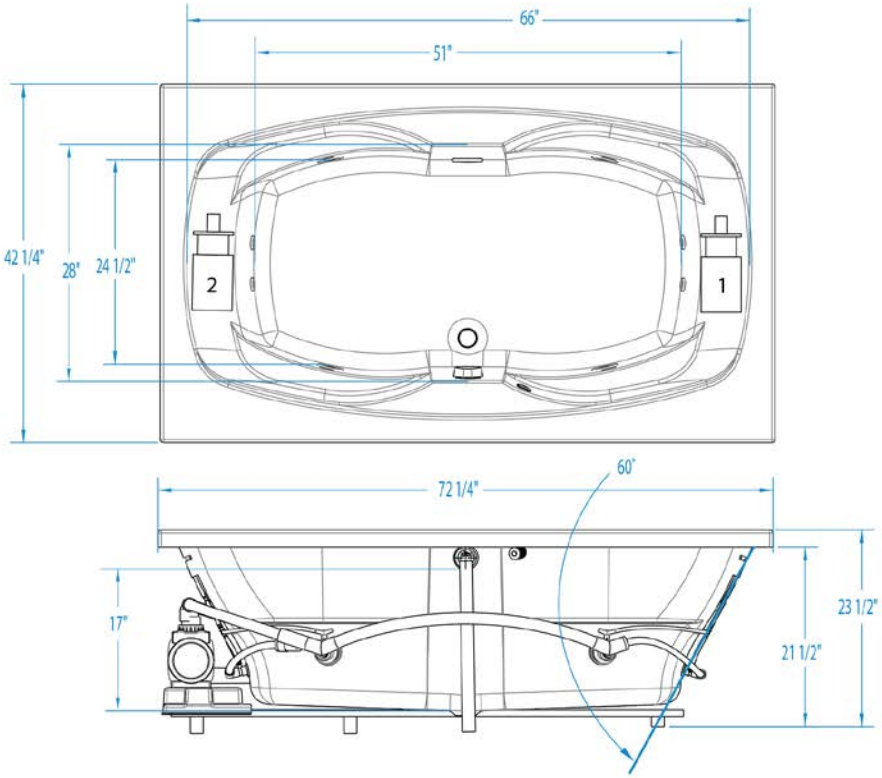
66"
51"
42 1/4"
28"
24 1/2"
2
1
72 1/4"
60°
17"
23 1/2"
21 1/2"

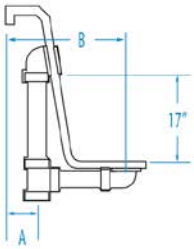
B
17"
A

Marratta Elements



Material : Premium Cast Acrylic

Min: 52 Gal
Max: 63 Gal

Features

- Ergonomic bathing well for comfort
- Integral 19 in. skirt
- Integral tiling flange
- Sculpted armrests
- Slip resistant textured floor for safety
- Left or Right hand drain
- Premium cast acrylic surface
- Whirlpool Features:
- Pneumatic on/off control
- 6 directional hydrotherapy jets
- Whirlpool pump
- Safety suction system

MARRATTA ELEMENTS - PRICING CATEGORY : HE

SKU	System	Color	Configuration	Dimensions & Weight	MSRP
7260420VL-BI	Soaker - No System	Biscuit	Left-hand Drain	60” x 42” x 19” / 162 lb 1524mm x 1067mm x 483mm / 73.47 kg	$ 969
7260420VL-WH		White			$ 934
7260420VR-BI		Biscuit	Right-hand Drain		$ 969
7260420VR-WH		White			$ 934
7260421VL-BI	Whirlpool Massage	Biscuit	Left-hand Drain		$ 1583
7260421VL-WH		White			$ 1548
7260421VR-BI		Biscuit	Right-hand Drain		$ 1583
7260421VR-WH		White			$ 1548

OPTIONS

SKU	Description	MSRP
8095HEATER	Factory installed inline heater Applicable to whirlpools only	$ 541
HTH1	Factory installed inline heater Applicable to whirlpools only	$ 568
CRATE-ELEMENTS	Crating charge option for one at at time shipment Requires additional charges for freight collect shipment. Consult customer care	$ 73

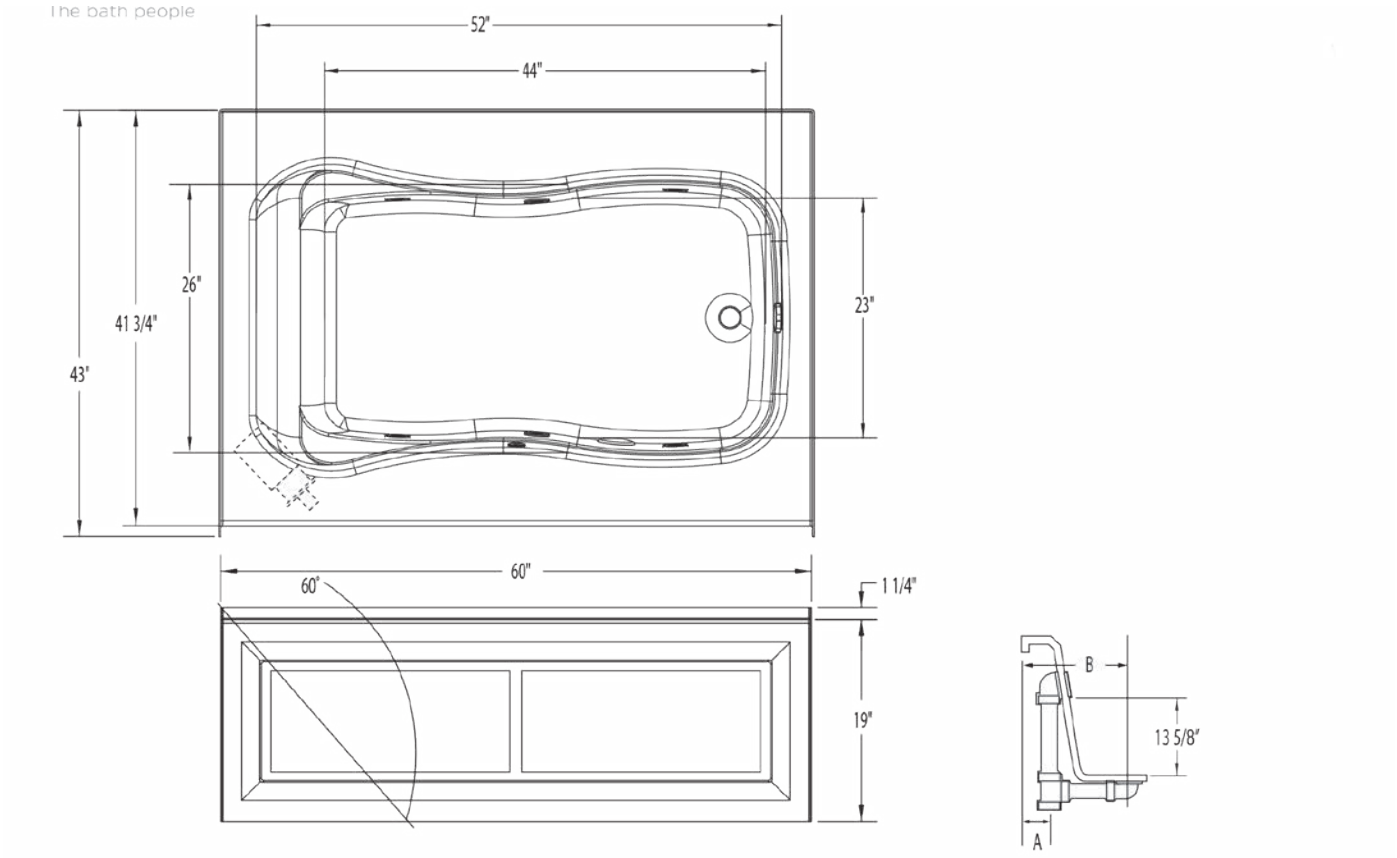
The bath people
52"
44"
26"
41 3/4"
43"
23"
60"
60"
1 1/4"
19"
B
13 5/8"
A

Marratta Stocking



Material : Premium Cast Acrylic

Min: 52 Gal
Max: 72 Gal

Features

- Ergonomic bathing well for comfort
- Integral 19 in. skirt
- Sculpted armrests
- Pre-leveled wood base makes installation easier
- Slip-resistant textured floor for safety
- Left or Right hand drain
- Premium cast acrylic surface
- Whirlpool Features:
- Pneumatic on/off control
- 8 hydrotherapy jets: High-flow directional and Low-profile spinning micro-jets
- Whirlpool pump
- Safety suction system
- Air Bath Features:
- Pneumatic on/off control
- Perimeter air system
- Single-speed heated-air blower with automated purge and dry cycle

MARRATTA STOCKING - PRICING CATEGORY : HV

SKU	System	Color	Configuration	Dimensions & Weight	MSRP
7260420AL-BI	Air Massage	Biscuit	Left-hand Drain	60” x 42” x 19” / 172 lb 1524mm x 1067mm x 483mm / 78.0 kg	$ 3149
7260420AL-WH		White			$ 3114
7260420AR-BI		Biscuit	Right-hand Drain		$ 3149
7260420AR-WH		White			$ 3114
7260420L-BI	Soaker - No System	Biscuit	Left-hand Drain		$ 1697
7260420L-WH		White			$ 1662
7260420R-BI		Biscuit	Right-hand Drain		$ 1697
7260420R-WH		White			$ 1662
7260421L-BI	Whirlpool Massage	Biscuit	Left-hand Drain		$ 2951
7260421L-WH		White			$ 2916
7260421R-BI		Biscuit	Right-hand Drain		$ 2951
7260421R-WH		White			$ 2916

OPTIONS

SKU	Description	MSRP
PLL2	Pump location is applicable to whirlpools and blower location for air system No charge option Refer to technical drawing for applicable choices	$ 0
PLL3	Pump location is applicable to whirlpools and blower location for air system No charge option Refer to technical drawing for applicable choices	$ 0
PLL4	Pump location is applicable to whirlpools and blower location for air system No charge option Refer to technical drawing for applicable choices	$ 0
PLL5		$ 0
CDOBCD	Cable drive waste & overflow kit Available finishes: White **(WH)**, Biscuit **(BI)**, Chrome **(CH)**, Polished Brass **(BR)**, Brushed Nickel **(SN)**, Oil rubbed bronze **(OB)**,	$ 625
CDWHCD		$ 554
CDBRCD		$ 625
CDBICD		$ 554
CDSNCD		$ 625
CDCHCD		$ 490
8095HEATER	Factory installed inline heater Applicable to whirlpools only	$ 541
HTH1		$ 568

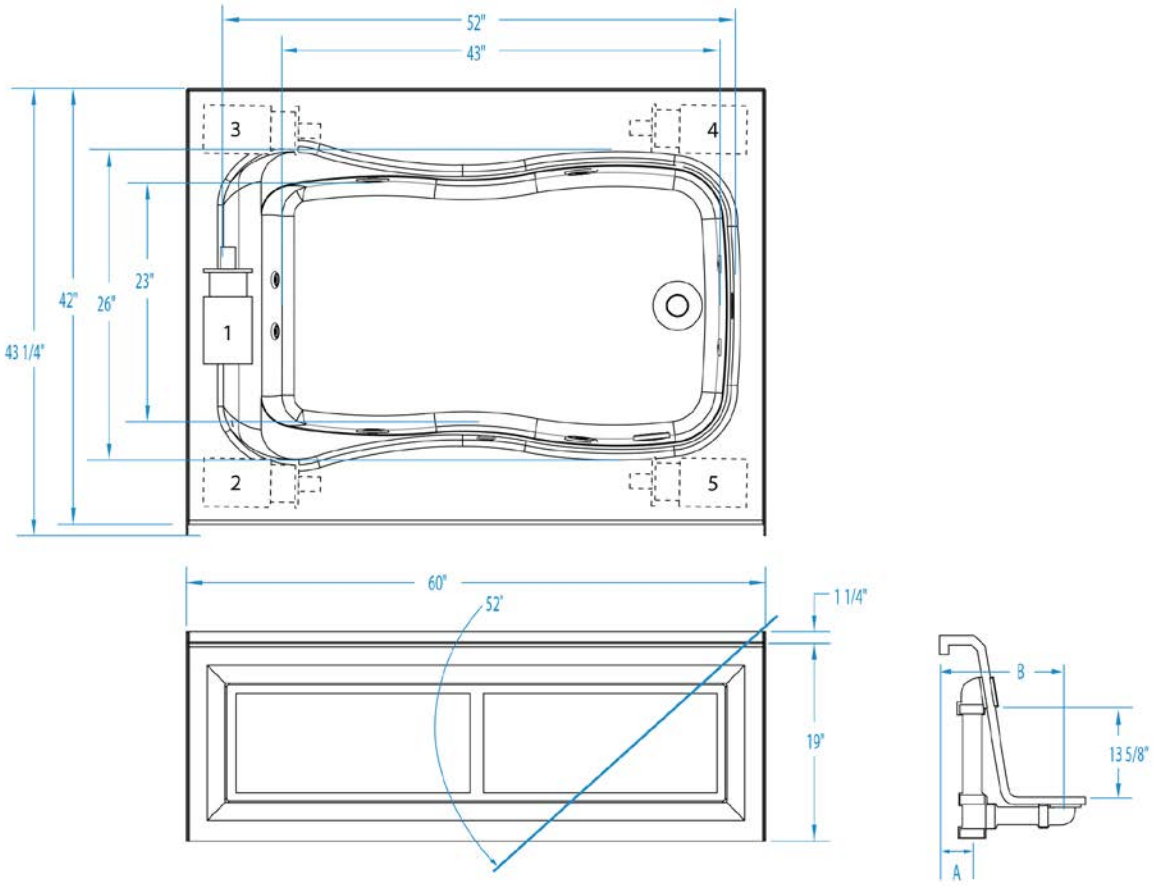
52"
43"
3
4
1
2
5
43 1/4"
42"
26"
23"
60"
52"
1 1/4"
19"
B
13 5/8"
A

Montrose I Elements



Material : Premium Cast Acrylic

Min: 47 Gal
Max: 66 Gal

Features

- Ergonomic bathing well for comfort
- Sculpted armrests
- Pre-leveled wood base makes installation easier
- Slip resistant textured floor for safety
- Universal drain
- Premium cast acrylic surface
- Whirlpool Features:
- Pneumatic on/off control
- 6 directional hydrotherapy jets
- Whirlpool pump
- Safety suction system

MONTROSE I ELEMENTS - PRICING CATEGORY : HE

SKU	System	Color	Configuration	Dimensions & Weight	MSRP
4160620V-BI	Soaker - No System	Biscuit	Universal	60” x 36” x 21 1/2” / 160 lb 1524mm x 914mm x 546mm / 72.56 kg	$ 870
4160620V-WH		White			$ 835
4160621V-BI	Whirlpool Massage	Biscuit			$ 1483
4160621V-WH		White			$ 1448

OPTIONS

SKU	Description	MSRP
8095HEATER	Factory installed inline heater Applicable to whirlpools only	$ 541
HTH1	Factory installed inline heater Applicable to whirlpools only	$ 568
IF3T-BC	Factory installed Drawing required at time of order to specify side	$ 98

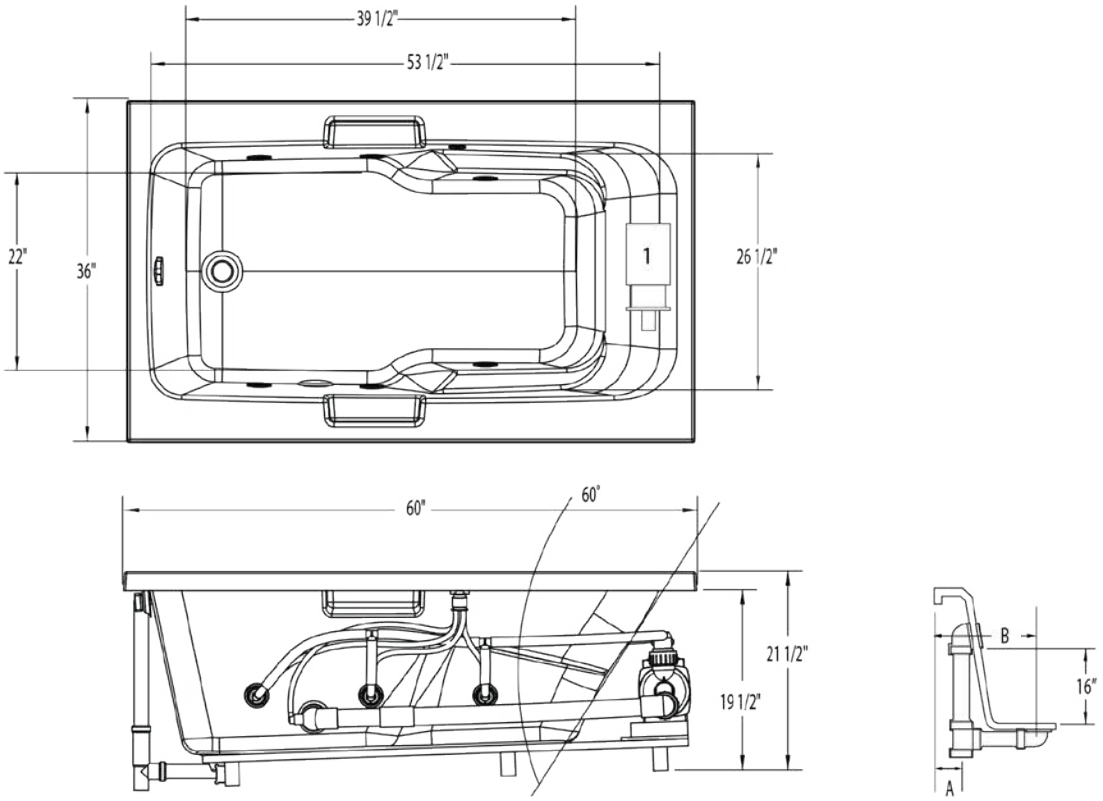
39 1/2"
53 1/2"
22"
36"
1
26 1/2"
60"
60°
21 1/2"
19 1/2"
B
16"
A

Montrose I Stocking





Material : Premium Cast Acrylic

Min: 47 Gal
Max: 66 Gal

Features

- Ergonomic bathing well for comfort
- Sculpted armrests
- Integral acrylic grab bars (2)
- Pre-leveled wood base makes installation easier
- Slip-resistant textured floor for safety
- Universal drain
- Premium cast acrylic surface

MONTROSE I STOCKING - PRICING CATEGORY : HV

SKU	System	Color	Configuration	Dimensions & Weight	MSRP
4160620-BI	Soaker - No System	Biscuit	Universal	60” x 36” x 21 1/2” / 160 lb 1524mm x 914mm x 546mm / 72.56 kg	$ 1265
4160620-WH		White			$ 1230
4160620A-BI	Air Massage	Biscuit			$ 2538
4160620A-WH		White			$ 2503
4160621-BI	Whirlpool Massage	Biscuit			$ 2346
4160621-WH		White			$ 2311

OPTIONS

SKU	Description	MSRP
CDOBCD	Cable drive waste & overflow kit Available finishes: White **(WH)**, Biscuit **(BI)**, Chrome **(CH)**, Polished Brass **(BR)**, Brushed Nickel **(SN)**, Oil rubbed bronze **(OB)**,	$ 625
CDWHCD	Cable drive waste & overflow kit Available finishes: White **(WH)**, Biscuit **(BI)**, Chrome **(CH)**, Polished Brass **(BR)**, Brushed Nickel **(SN)**, Oil rubbed bronze **(OB)**,	$ 554
CDBRCD	Cable drive waste & overflow kit Available finishes: White **(WH)**, Biscuit **(BI)**, Chrome **(CH)**, Polished Brass **(BR)**, Brushed Nickel **(SN)**, Oil rubbed bronze **(OB)**,	$ 625
CDBICD		$ 554
CDSNCD		$ 625
CDCHCD		$ 490
8095HEATER	Factory installed inline heater Applicable to whirlpools only	$ 541
HTH1		$ 568
IF3T-BC	Factory installed Drawing required at time of order to specify side	$ 98

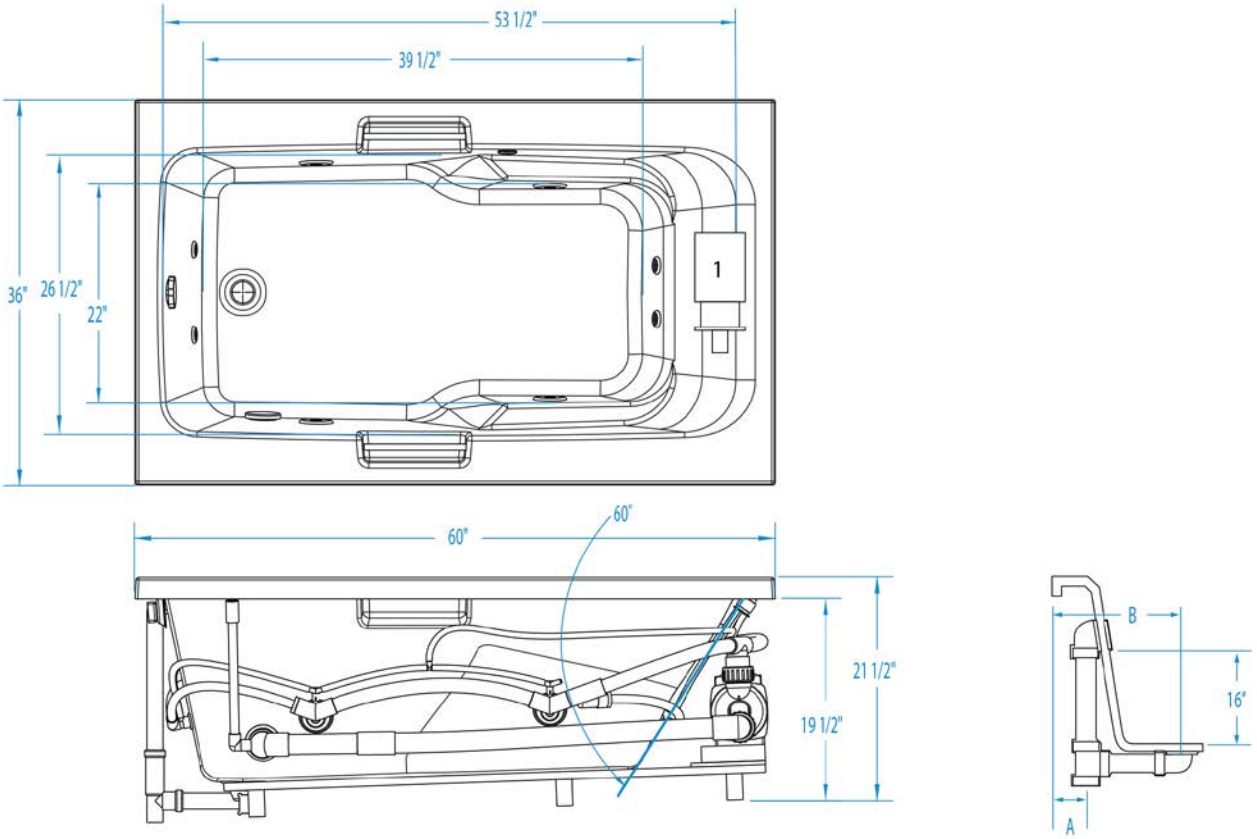
53 1/2"
39 1/2"
36"
26 1/2"
22"
1
60"
60"
21 1/2"
19 1/2"
B
16"
A

Montrose II Elements



Material : Premium Cast Acrylic

Min: 60 Gal
Max: 80 Gal

Features

- Ergonomic bathing well for comfort
- Sculpted armrests
- Pre-leveled wood base makes installation easier
- Slip resistant textured floor for safety
- Universal drain
- Premium cast acrylic surface
- Whirlpool Features:
- Pneumatic on/off control
- 6 directional hydrotherapy jets
- Whirlpool pump
- Safety suction system

MONTROSE II ELEMENTS - PRICING CATEGORY : HE

SKU	System	Color	Configuration	Dimensions & Weight	MSRP
4272620V-BI	Soaker - No System	Biscuit	Universal	72” x 36” x 21 3/4” / 172 lb 1829mm x 914mm x 552mm / 78.0 kg	$ 926
4272620V-WH		White			$ 891
4272621V-BI	Whirlpool Massage	Biscuit			$ 1539
4272621V-WH		White			$ 1504

OPTIONS

SKU	Description	MSRP
8095HEATER	Factory installed inline heater Applicable to whirlpools only	$ 541
HTH1	Factory installed inline heater Applicable to whirlpools only	$ 568
IF3T-BC	Factory installed Drawing required at time of order to specify side	$ 98

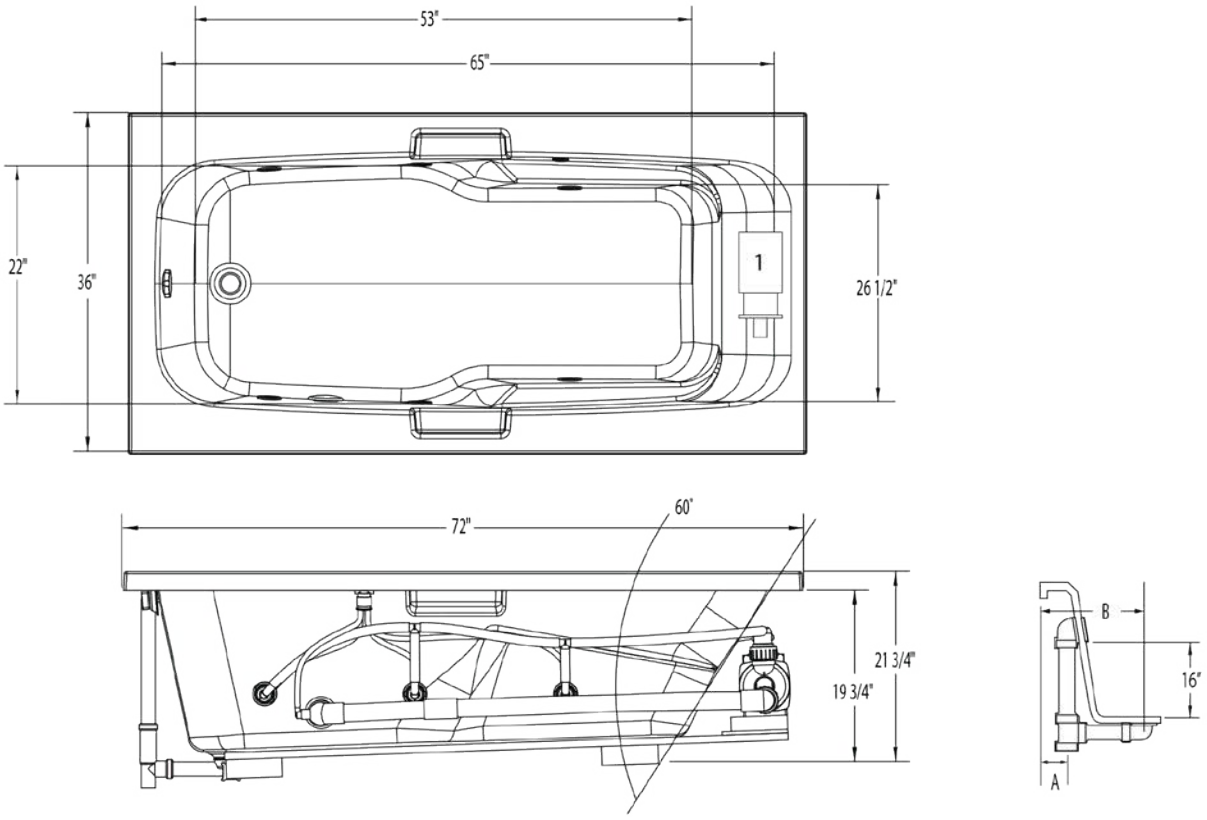
53"
65"
22"
36"
1
26 1/2"
72"
60"
21 3/4"
19 3/4"
B
16"
A

Montrose II Stocking





Material : Premium Cast Acrylic

Min: 60 Gal
Max: 80 Gal

Features

- Ergonomic bathing well for comfort
- Sculpted armrests
- Integral acrylic grab bars (2)
- Pre-leveled wood base makes installation easier
- Slip-resistant textured floor for safety
- Universal drain
- Premium cast acrylic surface
- Whirlpool Features:
- Pneumatic on/off control
- 8 hydrotherapy jets: High-flow directional and Low-profile spinning micro-jets
- Whirlpool pump
- Safety suction system
- Air Bath Features:
- Pneumatic on/off control
- Perimeter air system
- Single-speed heated-air blower with automated purge and dry cycle

MONTROSE II STOCKING - PRICING CATEGORY : HV

SKU	System	Color	Configuration	Dimensions & Weight	MSRP
4272620-BI	Soaker - No System	Biscuit	Universal	72” x 36” x 21 3/4” / 172 lb 1829mm x 914mm x 552mm / 78.0 kg	$ 1330
4272620-WH		White			$ 1295
4272620A-BI	Air Massage	Biscuit			$ 2687
4272620A-WH		White			$ 2652
4272621-BI	Whirlpool Massage	Biscuit			$ 2488
4272621-WH		White			$ 2453

OPTIONS

SKU	Description	MSRP
72ACSK	Color matched 72 inch acrylic skirt with removable access panel	$ 1269
CDOBCD	Cable drive waste & overflow kit Available finishes: White **(WH)**, Biscuit **(BI)**, Chrome **(CH)**, Polished Brass **(BR)**, Brushed Nickel **(SN)**, Oil rubbed bronze **(OB)**,	$ 625
CDWHCD	Cable drive waste & overflow kit Available finishes: White **(WH)**, Biscuit **(BI)**, Chrome **(CH)**, Polished Brass **(BR)**, Brushed Nickel **(SN)**, Oil rubbed bronze **(OB)**,	$ 554

OPTIONS

SKU	Description	MSRP
CDBRCD	Cable drive waste & overflow kit Available finishes: White **(WH)**, Biscuit **(BI)**, Chrome **(CH)**, Polished Brass **(BR)**, Brushed Nickel **(SN)**, Oil rubbed bronze **(OB)**,	$ 625
CDBICD		$ 554
CDSNCD		$ 625
CDCHCD		$ 490
8095HEATER	Factory installed inline heater Applicable to whirlpools only	$ 541
HTH1		$ 568
IF3T-BC	Factory installed Drawing required at time of order to specify side	$ 98

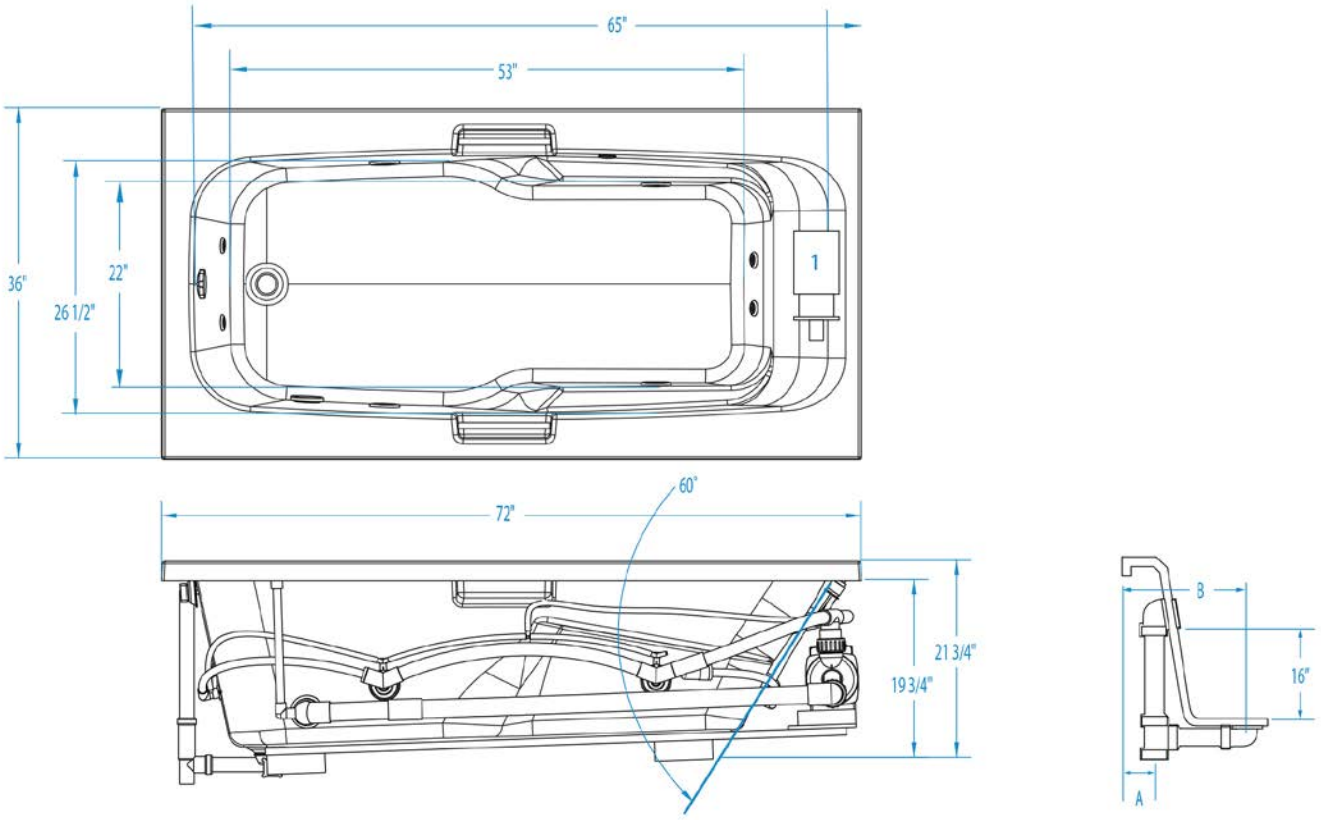
65"
53"
36"
26 1/2"
22"
1
72"
60°
21 3/4"
19 3/4"
B
16"
A

Morandi Elements



Material : Premium Cast Acrylic

Min: 55 Gal
Max: 90 Gal

Features

- Ergonomic bathing well for comfort
- Integral 22 in. skirt
- Integral tiling flange
- Sculpted armrests
- Slip resistant textured floor for safety
- Left or Right hand drain
- Premium cast acrylic surface
- Whirlpool Features:
- Pneumatic on/off control
- 6 directional hydrotherapy jets
- Whirlpool pump
- Safety suction system

MORANDI ELEMENTS - PRICING CATEGORY : HE

SKU	System	Color	Configuration	Dimensions & Weight	MSRP
8260620V-BI	Soaker - No System	Biscuit	Center Front Drain	61 1/2" x 60 1/4" x 23 1/4" / 176 lb 1562mm x 1530mm x 591mm / 79.82 kg	$ 1473
8260620V-WH		White			$ 1438
8260621V-BI	Whirlpool Massage	Biscuit			$ 2291
8260621V-WH		White			$ 2256

OPTIONS

SKU	Description	MSRP
8095HEATER	Factory installed inline heater Applicable to whirlpools only	$ 541
HTH1	Factory installed inline heater Applicable to whirlpools only	$ 568
CRATE-ELEMENTS	Crating charge option for one at at time shipment Requires additional charges for freight collect shipment. Consult customer care	$ 73

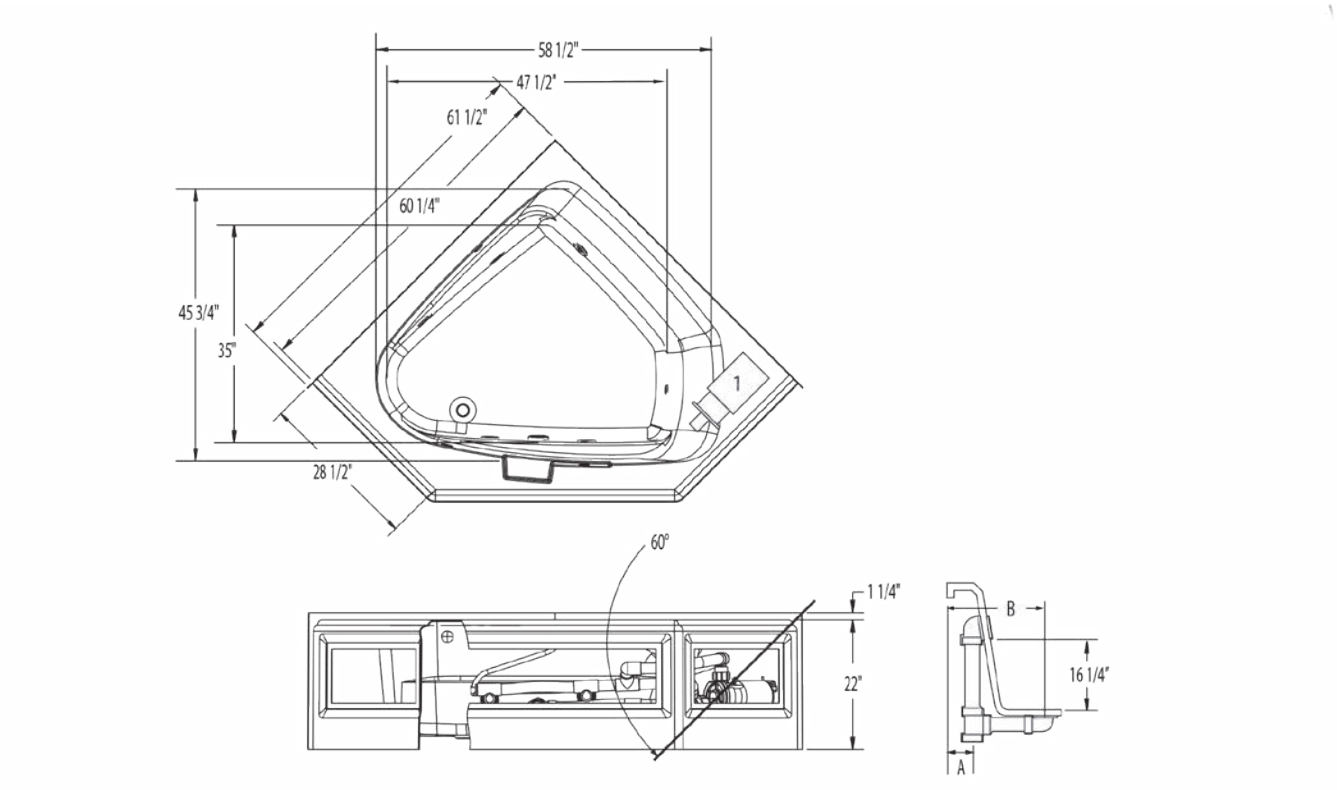
58 1/2"
47 1/2"
61 1/2"
60 1/4"
45 3/4"
35"
28 1/2"
1
60°
1 1/4"
22"
B
16 1/4"
A

Morandi Stocking



Material : Premium Cast Acrylic

Min: 55 Gal
Max: 90 Gal

Features

- Ergonomic bathing well for comfort
- Integral 22 in. skirt
- Removable access panels (Whirlpool/Air Bath models)
- Sculpted armrests
- Integral clear acrylic grab bar
- Pre-leveled wood base makes installation easier
- Slip-resistant textured floor for safety
- Left Front drain
- Premium cast acrylic surface
- Whirlpool Features:
- Pneumatic on/off control
- 8 hydrotherapy jets: High-flow directional and Low-profile spinning micro-jets
- Whirlpool pump
- Safety suction system

MORANDI STOCKING - PRICING CATEGORY : HV

SKU	System	Color	Configuration	Dimensions & Weight	MSRP
8260620-BI	Soaker - No System	Biscuit	Center Front Drain	61 1/2" x 60 1/4" x 23 1/4" / 176 lb 1562mm x 1530mm x 591mm / 79.82 kg	$ 2417
8260620-WH		White			$ 2382
8260621-BI	Whirlpool Massage	Biscuit			$ 3574
8260621-WH		White			$ 3539

OPTIONS

SKU	Description	MSRP
CDOBCD	Cable drive waste & overflow kit Available finishes: White **(WH)**, Biscuit **(BI)**, Chrome **(CH)**, Polished Brass **(BR)**, Brushed Nickel **(SN)**, Oil rubbed bronze **(OB)**,	$ 625
CDWHCD	Cable drive waste & overflow kit Available finishes: White **(WH)**, Biscuit **(BI)**, Chrome **(CH)**, Polished Brass **(BR)**, Brushed Nickel **(SN)**, Oil rubbed bronze **(OB)**,	$ 554
CDBRCD	Cable drive waste & overflow kit Available finishes: White **(WH)**, Biscuit **(BI)**, Chrome **(CH)**, Polished Brass **(BR)**, Brushed Nickel **(SN)**, Oil rubbed bronze **(OB)**,	$ 625
CDBICD		$ 554
CDSNCD		$ 625
CDCHCD		$ 490
8095HEATER	Factory installed inline heater Applicable to whirlpools only	$ 541

OPTIONS

SKU	Description	MSRP
HTH1	Factory installed inline heater Applicable to whirlpools only	$ 568

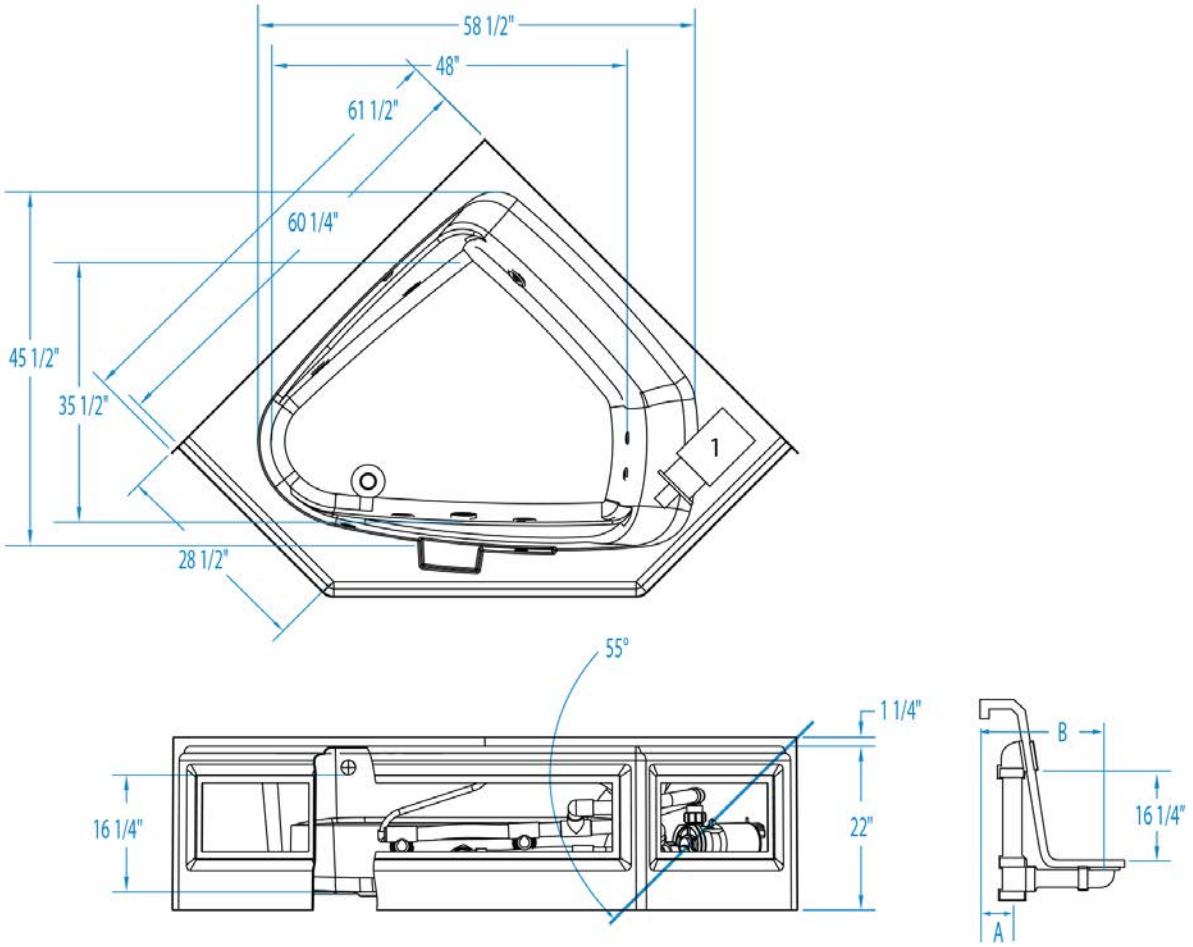
58 1/2"
48"
61 1/2"
60 1/4"
45 1/2"
35 1/2"
28 1/2"
1
55°
1 1/4"
16 1/4"
22"
B
16 1/4"
A

Novelli Elements



Material : Premium Cast Acrylic

Min: 32 Gal
Max: 52 Gal

Features

- Ergonomic bathing well for comfort
- Integral 19 in. skirt
- Integral tiling flange
- Sculpted armrests
- Slip resistant textured floor for safety
- Left or Right hand drain
- Premium cast acrylic surface
- Whirlpool Features:
- Pneumatic on/off control
- 6 directional hydrotherapy jets
- Whirlpool pump
- Safety suction system

NOVELLI ELEMENTS - PRICING CATEGORY : HE

SKU	System	Color	Configuration	Dimensions & Weight	MSRP
7660620VL-BI	Soaker - No System	Biscuit	Left-hand Drain	60” x 37 1/4” x 19” / 165 lb 1524mm x 946mm x 483mm / 74.83 kg	$ 969
7660620VL-WH		White			$ 934
7660620VR-BI		Biscuit	Right-hand Drain		$ 969
7660620VR-WH		White			$ 934
7660621VL-BI	Whirlpool Massage	Biscuit	Left-hand Drain		$ 1583
7660621VL-WH		White			$ 1548
7660621VR-BI		Biscuit	Right-hand Drain		$ 1583
7660621VR-WH		White			$ 1548

OPTIONS

SKU	Description	MSRP
8095HEATER	Factory installed inline heater Applicable to whirlpools only	$ 541
HTH1	Factory installed inline heater Applicable to whirlpools only	$ 568
CRATE-ELEMENTS	Crating charge option for one at at time shipment Requires additional charges for freight collect shipment. Consult customer care	$ 73

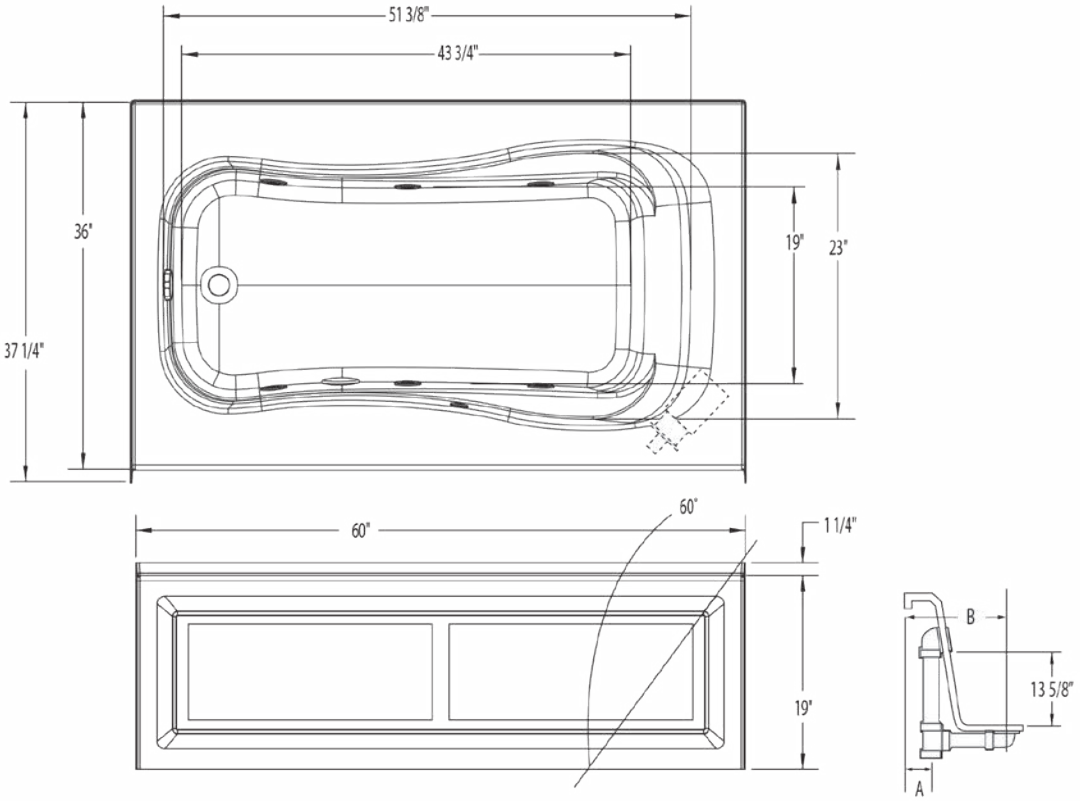
51 3/8"
43 3/4"
36"
37 1/4"
19"
23"
60"
60"
1 1/4"
19"
B
13 5/8"
A

Novelli Stocking



Material : Premium Cast Acrylic

Min: 32 Gal
Max: 52 Gal

Features

- Ergonomic bathing well for comfort
- Integral 19 in. skirt
- Integral tiling flange (3T) acts as a moisture barrier
- Removable acess panels (whirlpool/air bath models)
- Sculpted armrests
- Pre-leveled wood base makes installation easier
- Slip-resistant textured floor for safety
- Left or right drain
- Premium cast acrylic surface
- Whirlpool Features:
- Pneumatic on/off control
- 8 hydrotherapy jets: High-flow directional and Low-profile spinning micro-jets
- Whirlpool pump
- Safety suction system
- Air Bath Features:
- Pneumatic on/off control
- Perimeter air system
- Single-speed heated-air blower with automated purge and dry cycle

NOVELLI STOCKING - PRICING CATEGORY : HV

SKU	System	Color	Configuration	Dimensions & Weight	MSRP
7660620AL-BI	Air Massage	Biscuit	Left-hand Drain	60” x 37 1/4” x 19” / 170 lb 1524mm x 946mm x 483mm / 77.1 kg	$ 2923
7660620AL-WH		White			$ 2888
7660620AR-BI		Biscuit	Right-hand Drain		$ 2923
7660620AR-WH		White			$ 2888
7660620L-BI	Soaker - No System	Biscuit	Left-hand Drain		$ 1476
7660620L-WH		White			$ 1441
7660620R-BI		Biscuit	Right-hand Drain		$ 1476
7660620R-WH		White			$ 1441
7660621L-BI	Whirlpool Massage	Biscuit	Left-hand Drain		$ 2730
7660621L-WH		White			$ 2695
7660621R-BI		Biscuit	Right-hand Drain		$ 2730

NOVELLI STOCKING - PRICING CATEGORY : HV

SKU	System	Color	Configuration	Dimensions & Weight	MSRP
7660621R-WH	Whirlpool Massage	White	Right-hand Drain	60” x 37 1/4” x 19” / 170 lb 1524mm x 946mm x 483mm / 77.1 kg	$ 2695

OPTIONS

SKU	Description	MSRP
PLL2	Pump location is applicable to whirlpools and blower location for air system No charge option Refer to technical drawing for applicable choices	$ 0
PLL3	Pump location is applicable to whirlpools and blower location for air system No charge option Refer to technical drawing for applicable choices	$ 0
PLL4	Pump location is applicable to whirlpools and blower location for air system No charge option Refer to technical drawing for applicable choices	$ 0
PLL5		$ 0
CDOBCD	Cable drive waste & overflow kit Available finishes: White **(WH)**, Biscuit **(BI)**, Chrome **(CH)**, Polished Brass **(BR)**, Brushed Nickel **(SN)**, Oil rubbed bronze **(OB)**,	$ 625
CDWHCD		$ 554
CDBRCD		$ 625
CDBICD		$ 554
CDSNCD		$ 625
CDCHCD		$ 490
8095HEATER	Factory installed inline heater Applicable to whirlpools only	$ 541
HTH1		$ 568

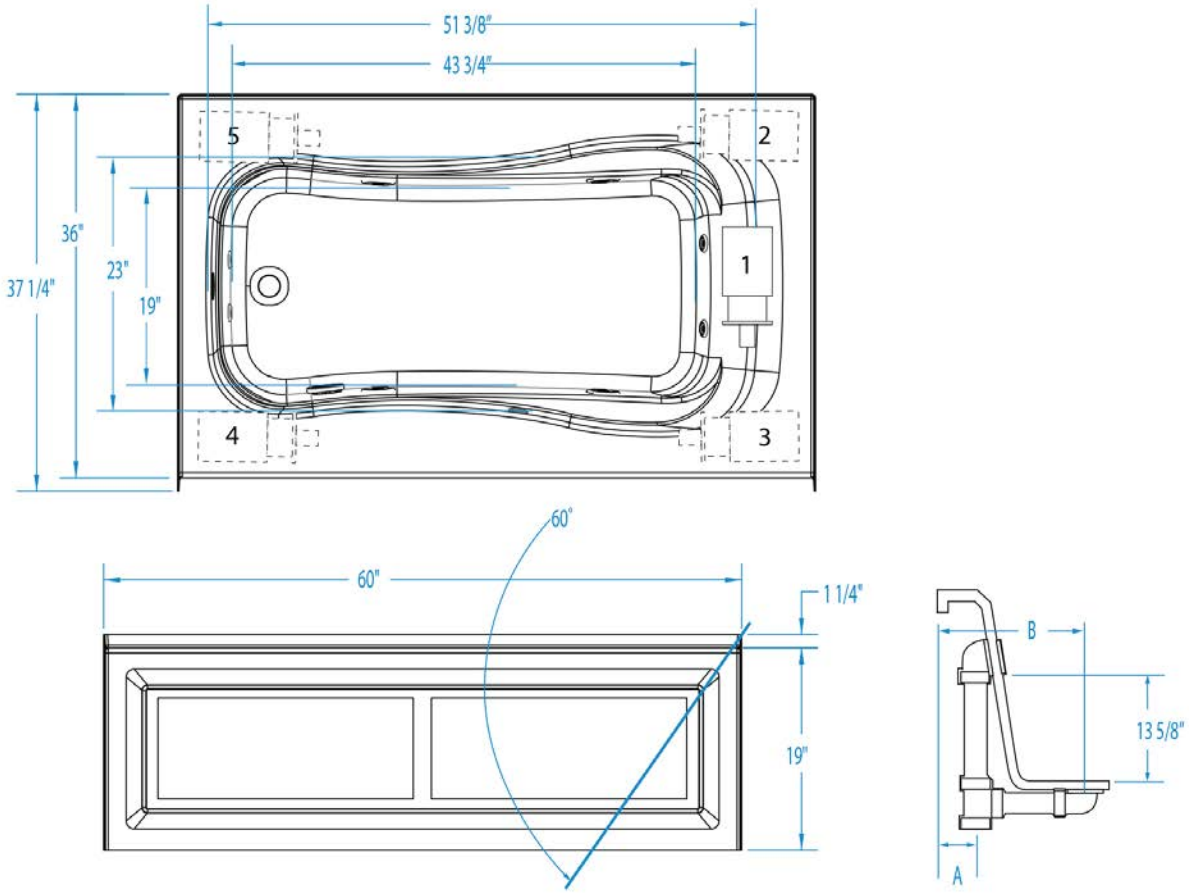
51 3/8"
43 3/4"
5
2
1
4
3
36"
37 1/4"
23"
19"
60°
60"
1 1/4"
19"
B
13 5/8"
A

Preakness Elements





Material : Premium Cast Acrylic

Min: 73 Gal
Max: 85 Gal

Features

- Ergonomic bathing well for comfort
- Sculpted armrests
- Pre-leveled wood base makes installation easier (non-skirted units)
- Slip resistant textured floor for safety
- Center Front drain
- Premium cast acrylic surface
- Whirlpool Features:
- Pneumatic on/off control
- 6 directional hydrotherapy jets
- Whirlpool pump
- Safety suction system

PREAKNESS ELEMENTS - PRICING CATEGORY : HE

SKU	System	Color	Configuration	Dimensions & Weight	MSRP
9560620V-BI	Soaker - No System	Biscuit	Center Front Drain	59 1/2" x 59 1/2" x 21 1/2" / 166 lb 1511mm x 1511mm x 546mm / 75.28 kg	$ 1143
9560620V-WH		White			$ 1108
9560621V-BI	Whirlpool Massage	Biscuit			$ 1773
9560621V-WH		White			$ 1738

OPTIONS

SKU	Description	MSRP
LPNC-ELEMENTS	Alternate pump location Premium option for Elements whirlpools Specify at time of order; refer to drawing.	$ 66
8095HEATER	Factory installed inline heater Applicable to whirlpools only	$ 541
HTH1	Factory installed inline heater Applicable to whirlpools only	$ 568
IF2T-BC	Factory installed Corner applications	$ 98

The bath people

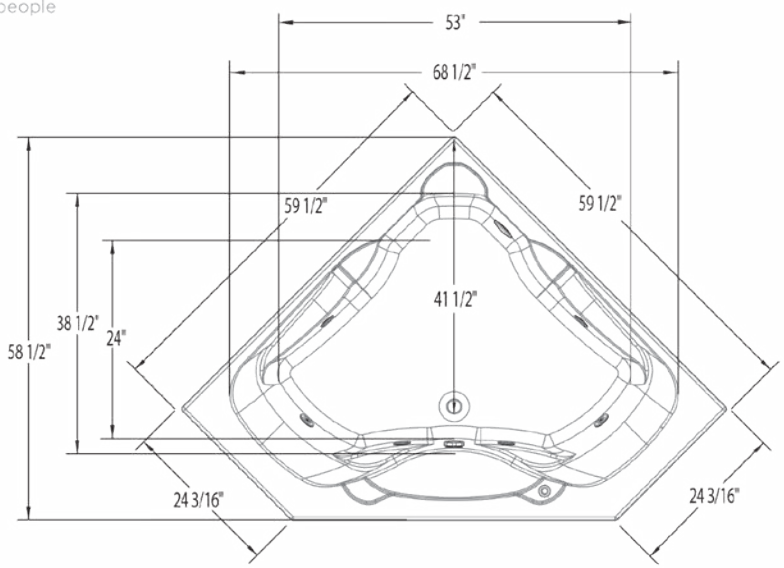

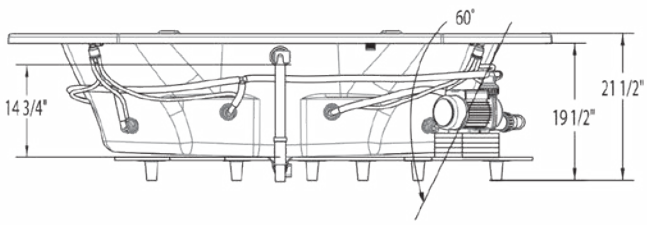

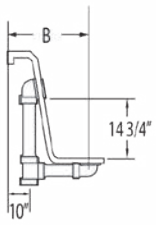

Preakness Stocking





Material : Premium Cast Acrylic

Min: 73 Gal
Max: 85 Gal

Features

- Ergonomic bathing well for comfort
- Sculpted armrests
- 2 person bath
- Pre-leveled wood base makes installation easier
- Slip-resistant textured floor for safety
- Center front drain
- Premium cast acrylic surface
- Whirlpool Features:
- Pneumatic on/off control
- 8 hydrotherapy jets: High-flow directional and Low-profile spinning micro-jets
- Whirlpool pump
- Safety suction system
- Air Bath Features:
- Pneumatic on/off control
- Perimeter air system
- Single-speed heated-air blower with automated purge and dry cycle

PREAKNESS STOCKING - PRICING CATEGORY : HV

SKU	System	Color	Configuration	Dimensions & Weight	MSRP
9560620-BI	Soaker - No System	Biscuit	Center Front Drain	59 1/2" x 59 1/2" x 21 1/2" / 166 lb 1511mm x 1511mm x 546mm / 75.28 kg	$ 2006
9560620-WH		White			$ 1971
9560620A-BI	Air Massage	Biscuit			$ 3484
9560620A-WH		White			$ 3449
9560621-BI	Whirlpool Massage	Biscuit			$ 3054
9560621-WH		White			$ 3019

OPTIONS

SKU	Description	MSRP
PLL2	Pump location is applicable to whirlpools and blower location for air system No charge option Refer to technical drawing for applicable choices	$ 0
CDOBCD	Cable drive waste & overflow kit Available finishes: White **(WH)**, Biscuit **(BI)**, Chrome **(CH)**, Polished Brass **(BR)**, Brushed Nickel **(SN)**, Oil rubbed bronze **(OB)**,	$ 625
CDWHCD	Cable drive waste & overflow kit Available finishes: White **(WH)**, Biscuit **(BI)**, Chrome **(CH)**, Polished Brass **(BR)**, Brushed Nickel **(SN)**, Oil rubbed bronze **(OB)**,	$ 554

OPTIONS

SKU	Description	MSRP
CDBRCD	Cable drive waste & overflow kit Available finishes: White **(WH)**, Biscuit **(BI)**, Chrome **(CH)**, Polished Brass **(BR)**, Brushed Nickel **(SN)**, Oil rubbed bronze **(OB)**,	$ 625
CDBICD		$ 554
CDSNCD		$ 625
CDCHCD		$ 490
8095HEATER	Factory installed inline heater Applicable to whirlpools only	$ 541
HTH1		$ 568
IF2T-BC	Factory installed Corner applications	$ 98

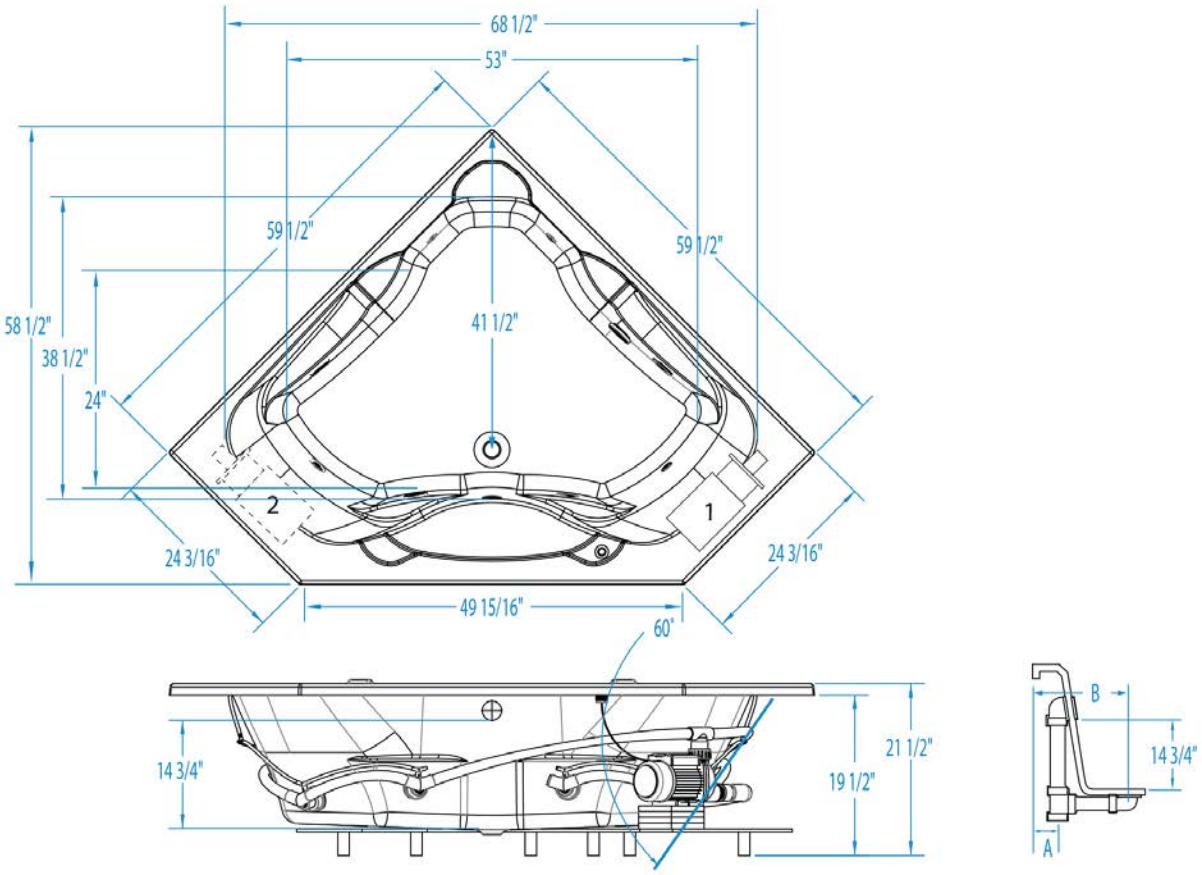
68 1/2"
53"
59 1/2"
59 1/2"
58 1/2"
38 1/2"
24"
41 1/2"
2
1
24 3/16"
24 3/16"
49 15/16"
60°
14 3/4"
19 1/2"
21 1/2"
B
14 3/4"
A

Starla Elements





Material : Premium Cast Acrylic

Min: 26 Gal
Max: 52 Gal

Features

- Ergonomic bathing well for comfort
- Sculpted armrests
- Pre-leveled wood base makes installation easier
- Slip resistant textured floor for safety
- Universal drain
- Premium cast acrylic surface
- Whirlpool Features:
- Pneumatic on/off control
- 6 directional hydrotherapy jets
- Whirlpool pump
- Safety suction system

STARLA ELEMENTS - PRICING CATEGORY : HE

SKU	System	Color	Configuration	Dimensions & Weight	MSRP
8460600V-BI	Soaker - No System	Biscuit	Universal	57” x 38” x 24” / 145 lb 1448mm x 965mm x 610mm / 65.76 kg	$ 884
8460600V-WH		White			$ 849
8460601V-BI	Whirlpool Massage	Biscuit			$ 1496
8460601V-WH		White			$ 1461

OPTIONS

SKU	Description	MSRP
8095HEATER	Factory installed inline heater Applicable to whirlpools only	$ 541
HTH1	Factory installed inline heater Applicable to whirlpools only	$ 568
CRATE-ELEMENTS	Crating charge option for one at at time shipment Requires additional charges for freight collect shipment. Consult customer care	$ 73

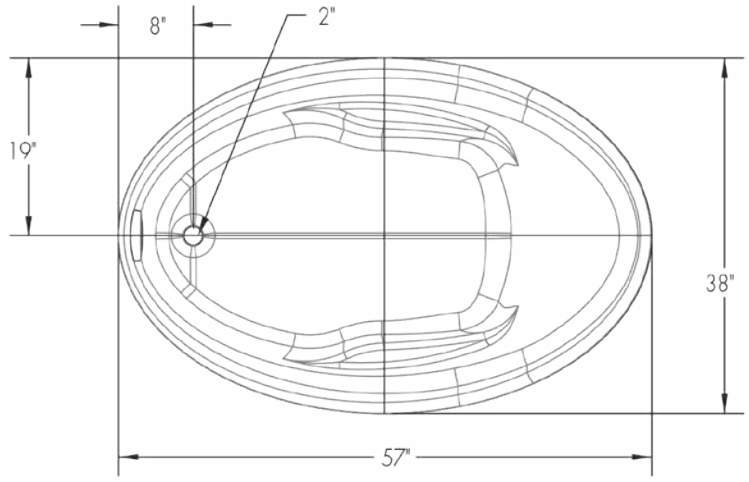
8"
2"
19"
38"
57"

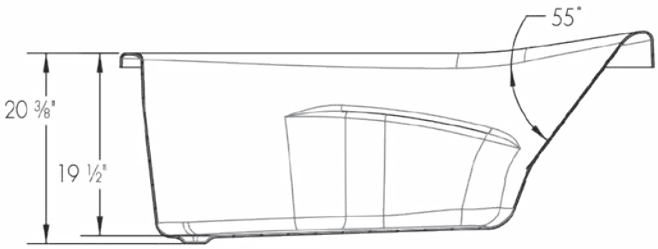
55°
20 3/8"
19 1/2"

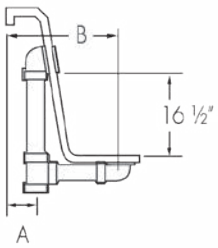
B
16 1/2"
A

Starla Stocking





Material : Premium Cast Acrylic

Min: 26 Gal
Max: 52 Gal

Features

- Ergonomic bathing well for comfort
- Sculpted armrests
- Raised headrest
- Pre-leveled wood base makes installation easier
- Slip-resistant textured floor for safety
- Universal drain
- Premium cast acrylic surface
- Whirlpool Features:
- Pneumatic on/off control
- 8 hydrotherapy jets: High-flow directional and Low-profile spinning micro-jets
- Whirlpool pump
- Safety suction system
- Air Bath Features:
- Pneumatic on/off control
- Perimeter air system
- Single-speed heated-air blower with automated purge and dry cycle

STARLA STOCKING - PRICING CATEGORY : HV

SKU	System	Color	Configuration	Dimensions & Weight	MSRP
8460600-BI	Soaker - No System	Biscuit	Universal	57” x 38” x 24” / 145 lb 1448mm x 965mm x 610mm / 65.76 kg	$ 1335
8460600-WH		White			$ 1300
8460600A-BI	Air Massage	Biscuit			$ 2864
8460600A-WH		White			$ 2829
8460601-BI	Whirlpool Massage	Biscuit			$ 2693
8460601-WH		White			$ 2658

OPTIONS

SKU	Description	MSRP
CDOBCD	Cable drive waste & overflow kit Available finishes: White **(WH)**, Biscuit **(BI)**, Chrome **(CH)**, Polished Brass **(BR)**, Brushed Nickel **(SN)**, Oil rubbed bronze **(OB)**,	$ 625
CDWHCD	Cable drive waste & overflow kit Available finishes: White **(WH)**, Biscuit **(BI)**, Chrome **(CH)**, Polished Brass **(BR)**, Brushed Nickel **(SN)**, Oil rubbed bronze **(OB)**,	$ 554
CDBRCD	Cable drive waste & overflow kit Available finishes: White **(WH)**, Biscuit **(BI)**, Chrome **(CH)**, Polished Brass **(BR)**, Brushed Nickel **(SN)**, Oil rubbed bronze **(OB)**,	$ 625

OPTIONS

SKU	Description	MSRP
CDBICD	Cable drive waste & overflow kit Available finishes: White **(WH)**, Biscuit **(BI)**, Chrome **(CH)**, Polished Brass **(BR)**, Brushed Nickel **(SN)**, Oil rubbed bronze **(OB)**,	$ 554
CDSNCD		$ 625
CDCHCD		$ 490
8095HEATER	Factory installed inline heater Applicable to whirlpools only	$ 541
HTH1		$ 568

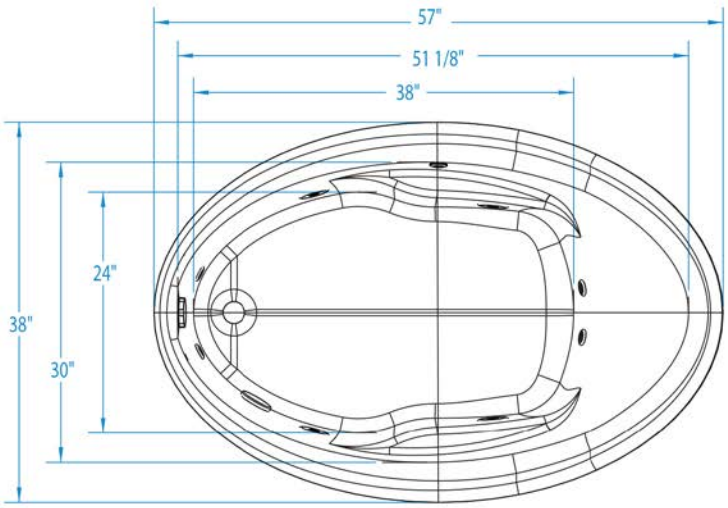

Note: No Grab Bar option available.

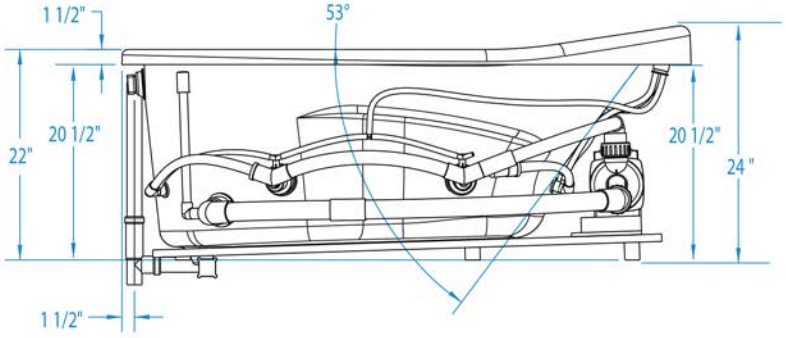

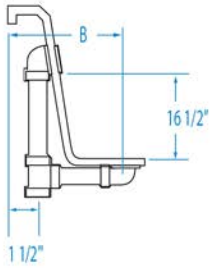

Vecelli Elements



Material : Premium Cast Acrylic

Min: 50 Gal
Max: 68 Gal

Features

- Ergonomic bathing well for comfort
- Integral 19 in. skirted
- Integral tiling flange
- Sculpted armrests
- Slip resistant textured floor for safety
- Left or Right hand drain
- Premium cast acrylic surface
- Whirlpool Features:
- Pneumatic on/off control
- 6 directional hydrotherapy jets
- Whirlpool pump
- Safety suction system

VECELLI ELEMENTS - PRICING CATEGORY : HE

SKU	System	Color	Configuration	Dimensions & Weight	MSRP
7872620VL-BI	Soaker - No System	Biscuit	Left-hand Drain	72” x 36” x 19” / 165 lb 1829mm x 914mm x 483mm / 74.83 kg	$ 1201
7872620VL-WH		White			$ 1166
7872620VR-BI		Biscuit	Right-hand Drain		$ 1201
7872620VR-WH		White			$ 1166
7872621VL-BI	Whirlpool Massage	Biscuit	Left-hand Drain		$ 1944
7872621VL-WH		White			$ 1909
7872621VR-BI		Biscuit	Right-hand Drain		$ 1944
7872621VR-WH		White			$ 1909

OPTIONS

SKU	Description	MSRP
8095HEATER	Factory installed inline heater Applicable to whirlpools only	$ 541
HTH1	Factory installed inline heater Applicable to whirlpools only	$ 568
CRATE-ELEMENTS	Crating charge option for one at at time shipment Requires additional charges for freight collect shipment. Consult customer care	$ 73

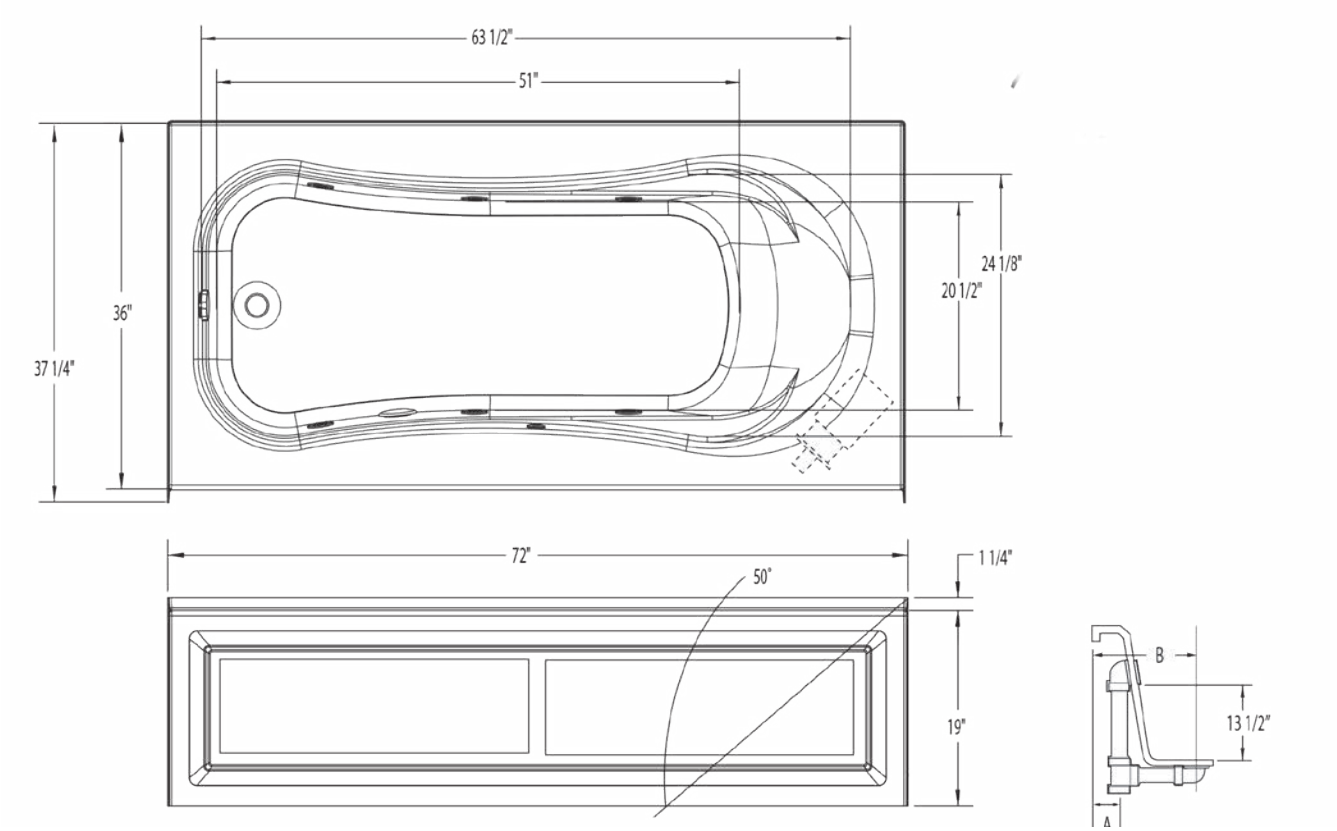
63 1/2"
51"
24 1/8"
20 1/2"
36"
37 1/4"
72"
50°
1 1/4"
19"
B
13 1/2"
A

Vecelli Stocking





Material : Premium Cast Acrylic

Min: 50 Gal
Max: 68 Gal

Features

- Ergonomic bathing well for comfort
- Integral 19 in. skirt
- Integral tiling flange (3T) acts as a moisture barrier
- Scuplted armrests
- Removable access panels (Whirlpool and Air Bath only)
- Pre-leveled wood base makes installation easier
- Slip-resistant textured floor for safety
- Left or Right hand drain
- Premium cast acrylic surface
- Whirlpool Features:
- Pneumatic on/off control
- 8 hydrotherapy jets: High-flow directional and Low-profile spinning micro-jets
- Whirlpool pump
- Safety suction system
- Air Bath Features:
- Pneumatic on/off control
- Perimeter air system
- Single-speed heated-air blower with automated purge and dry cycle

VECELLI STOCKING - PRICING CATEGORY : HV

SKU	System	Color	Configuration	Dimensions & Weight	MSRP
7872620AL-BI	Air Massage	Biscuit	Left-hand Drain	72” x 36” x 19” / 165 lb 1829mm x 914mm x 483mm / 74.83 kg	$ 3149
7872620AL-WH		White			$ 3114
7872620AR-BI		Biscuit	Right-hand Drain		$ 3149
7872620AR-WH		White			$ 3114
7872620L-BI	Soaker - No System	Biscuit	Left-hand Drain		$ 1683
7872620L-WH		White			$ 1648
7872620R-BI		Biscuit	Right-hand Drain		$ 1683
7872620R-WH		White			$ 1648
7872621L-BI	Whirlpool Massage	Biscuit	Left-hand Drain		$ 2921
7872621L-WH		White			$ 2886
7872621R-BI		Biscuit	Right-hand Drain		$ 2921

VECELLI STOCKING - PRICING CATEGORY : HV

SKU	System	Color	Configuration	Dimensions & Weight	MSRP
7872621R-WH	Whirlpool Massage	White	Right-hand Drain	72” x 36” x 19” / 165 lb 1829mm x 914mm x 483mm / 74.83 kg	$ 2886

OPTIONS

SKU	Description	MSRP
PLL2	Pump location is applicable to whirlpools and blower location for air system No charge option Refer to technical drawing for applicable choices	$ 0
PLL3	Pump location is applicable to whirlpools and blower location for air system No charge option Refer to technical drawing for applicable choices	$ 0
CDOBCD	Cable drive waste & overflow kit Available finishes: White **(WH)**, Biscuit **(BI)**, Chrome **(CH)**, Polished Brass **(BR)**, Brushed Nickel **(SN)**, Oil rubbed bronze **(OB)**,	$ 625
CDWHCD		$ 554
CDBRCD		$ 625
CDBICD		$ 554
CDSNCD		$ 625
CDCHCD		$ 490
8095HEATER	Factory installed inline heater Applicable to whirlpools only	$ 541
HTH1		$ 568

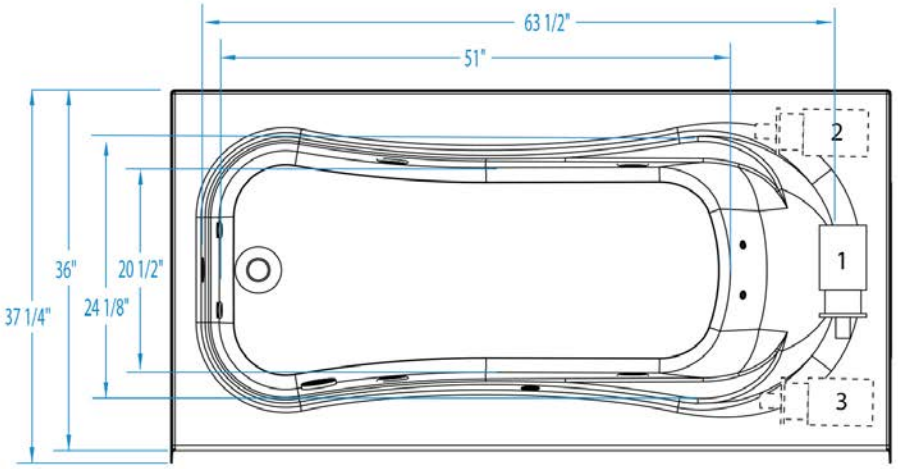
63 1/2"
51"
2
1
3
36"
37 1/4"
24 1/8"
20 1/2"

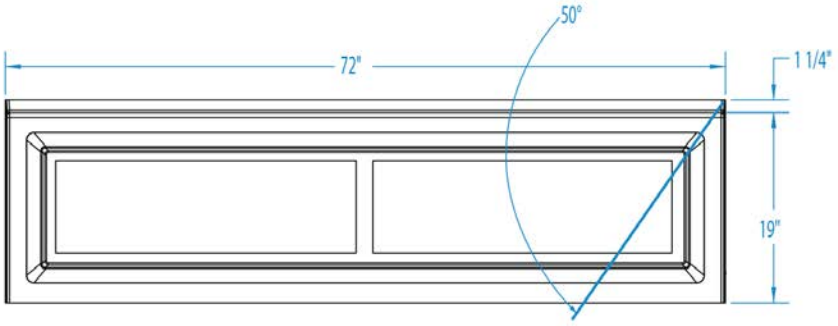
50°
72"
1 1/4"
19"

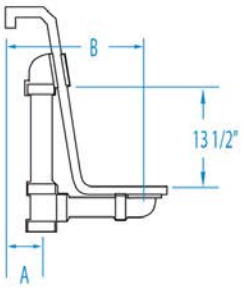
B
13 1/2"
A

Velencia 1.5 Stocking



Material : Premium Cast Acrylic

Min: 46 Gal
Max: 69 Gal

Features

- Ergonomic bathing well for comfort
- 2 person bath
- Can be used in undermount or drop-in application
- Pre-leveled wood base makes installation easier
- Slip-resistant textured floor for safety
- Center front drain
- Premium cast acrylic surface
- Whirlpool Features:
- Pneumatic on/off control
- 8 hydrotherapy jets: High-flow directional and Low-profile spinning micro-jets
- Whirlpool pump
- Safety suction system

VELENCIA 1.5 STOCKING - PRICING CATEGORY : HV

SKU	System	Color	Configuration	Dimensions & Weight	MSRP
8666620-BI	Soaker - No System	Biscuit	Center Front Drain	65 3/4" x 43 3/8" x 19 1/2" / 129 lb 1670mm x 1102mm x 495mm / 58.5 kg	$ 1451
8666620-WH		White			$ 1416
8666621-BI	Whirlpool Massage	Biscuit			$ 2416
8666621-WH		White			$ 2381

OPTIONS

SKU	Description	MSRP
PLL2	Pump location is applicable to whirlpools and blower location for air system No charge option Refer to technical drawing for applicable choices	$ 0
CDOBCD	Cable drive waste & overflow kit Available finishes: White **(WH)**, Biscuit **(BI)**, Chrome **(CH)**, Polished Brass **(BR)**, Brushed Nickel **(SN)**, Oil rubbed bronze **(OB)**,	$ 625
CDWHCD	Cable drive waste & overflow kit Available finishes: White **(WH)**, Biscuit **(BI)**, Chrome **(CH)**, Polished Brass **(BR)**, Brushed Nickel **(SN)**, Oil rubbed bronze **(OB)**,	$ 554
CDBRCD		$ 625
CDBICD		$ 554
CDSNCD		$ 625
CDCHCD		$ 490
8095HEATER	Factory installed inline heater Applicable to whirlpools only	$ 541
HTH1		$ 568

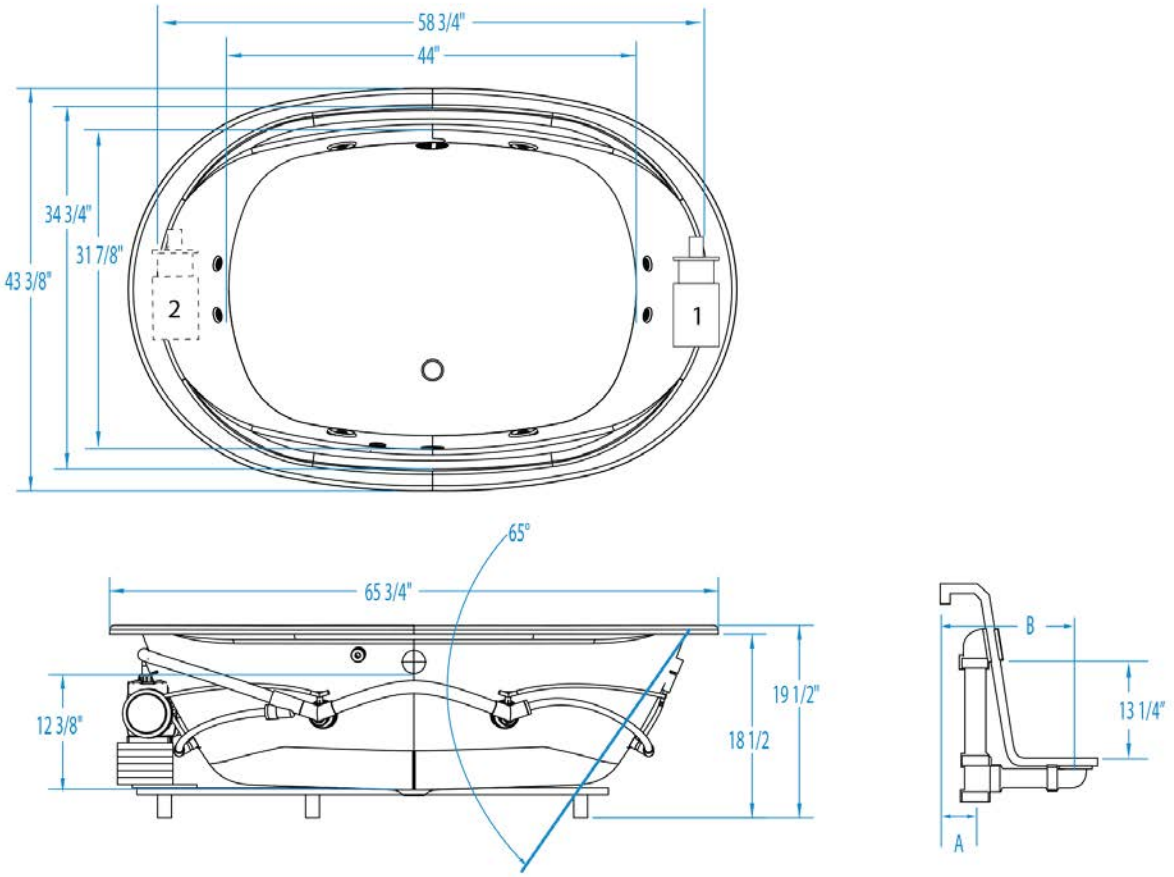
58 3/4"
44"
34 3/4"
31 7/8"
43 3/8"
2
1
65°
65 3/4"
12 3/8"
19 1/2"
18 1/2
B
13 1/4"
A

Vincenzo Q Stocking



Material : Premium Cast Acrylic

Min: 41 Gal
Max: 64 Gal

Features

- Ergonomic bathing well for comfort
- Extended 21 in. skirt (AFR)
- Integral double tiling flange
- Removable access panels (Whirlpool only)
- Slip-resistant textured floor for safety
- Pre-leveled wood base makes installation easier
- Left or right drain
- Premium cast acrylic surface
- Whirlpool Features:
- Pneumatic on/off control
- 8 hydrotherapy jets: High-flow directional and Low-profile spinning micro-jets
- Whirlpool pump
- Safety suction system

VINCENZO Q STOCKING - PRICING CATEGORY : HV

SKU	System	Color	Configuration	Dimensions & Weight	MSRP
9866600QL-BI	Soaker - No System	Biscuit	Left-hand Drain	66” x 35 1/4” x 24 1/8” / 166 lb 1676mm x 895mm x 613mm / 75.28 kg	$ 1590
9866600QL-WH		White			$ 1555
9866600QR-BI		Biscuit	Right-hand Drain		$ 1590
9866600QR-WH		White			$ 1555
9866601QL-BI	Whirlpool Massage	Biscuit	Left-hand Drain		$ 2898
9866601QL-WH		White			$ 2863
9866601QR-BI		Biscuit	Right-hand Drain		$ 2898
9866601QR-WH		White			$ 2863

OPTIONS

SKU	Description	MSRP
LPNC-ELEMENTS	Alternate pump location Premium option for Elements whirlpools Specify at time of order; refer to drawing.	$ 66
CDOBCD	Cable drive waste & overflow kit Available finishes: White **(WH)**, Biscuit **(BI)**, Chrome **(CH)**, Polished Brass **(BR)**, Brushed Nickel **(SN)**, Oil rubbed bronze **(OB)**,	$ 625
CDWHCD	Cable drive waste & overflow kit Available finishes: White **(WH)**, Biscuit **(BI)**, Chrome **(CH)**, Polished Brass **(BR)**, Brushed Nickel **(SN)**, Oil rubbed bronze **(OB)**,	$ 554

OPTIONS

SKU	Description	MSRP
CDBRCD	Cable drive waste & overflow kit Available finishes: White **(WH)**, Biscuit **(BI)**, Chrome **(CH)**, Polished Brass **(BR)**, Brushed Nickel **(SN)**, Oil rubbed bronze **(OB)**,	$ 625
CDBICD		$ 554
CDSNCD		$ 625
CDCHCD		$ 490
CS20.5	Color matched acrylic 20.5 inch cut skirt Option available at no charge	$ 0
8095HEATER	Factory installed inline heater Applicable to whirlpools only	$ 541
HTH1		$ 568

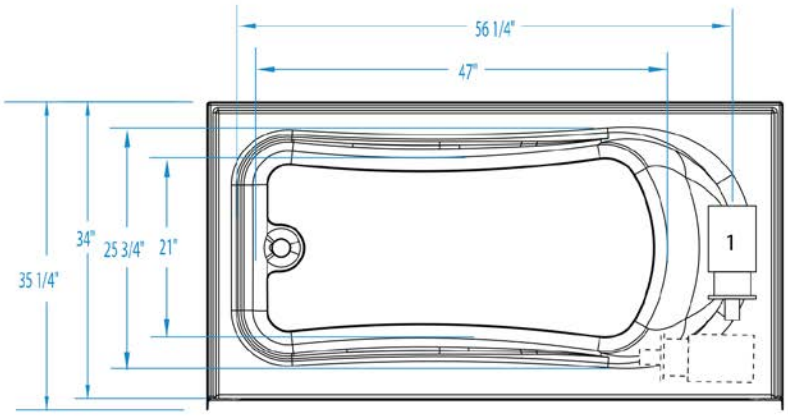

AFR allows for above the floor installation of waste, overflow and drainage. This unit is standard as AFR. Optional cut skirt available.

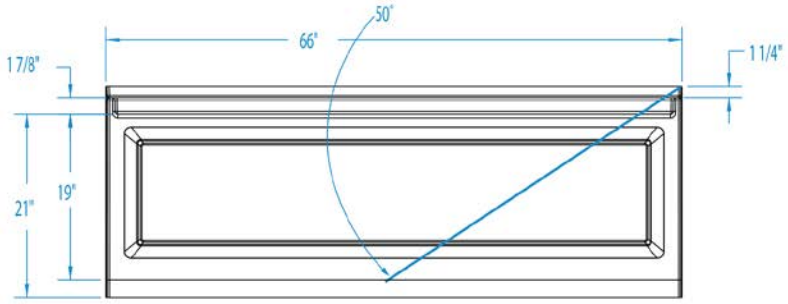

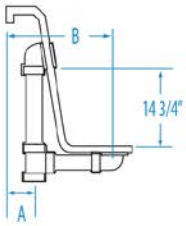

E148



Material : Premium Cast Acrylic

Features

- 1-Piece Shower
- Multiple toiletry shelves
- Stylized Smooth wall is easy to clean
- Slip-resistant,textured floor
- Premium cast acrylic surface
- 1 integral footrest (1 seat models) (E148L/R & WE148L/R)
- 2 integral footrests (no seat models) (E1480 & WE1480)
- Center drain

E148 - PRICING CATEGORY : AM

SKU	Color	Configuration	Dimensions & Weight	MSRP
E1480-BI	Biscuit	Center Drain	48” x 36” x 78” / 145 lb 1219mm x 914mm x 1981mm / 65.76 kg	$ 1816
E1480-WH	White			$ 1781
E148L-BI	Biscuit	Left seat, center drain		$ 1816
E148L-WH	White			$ 1781
E148R-BI	Biscuit	Right seat, center drain		$ 1816
E148R-WH	White			$ 1781

OPTIONS

SKU	Description	MSRP
4200BRASDRSF	2” Brass Surefit Joint Shower Drain Brass drain material Snap in strainer-stainless steel No-caulk connection.	$ 48

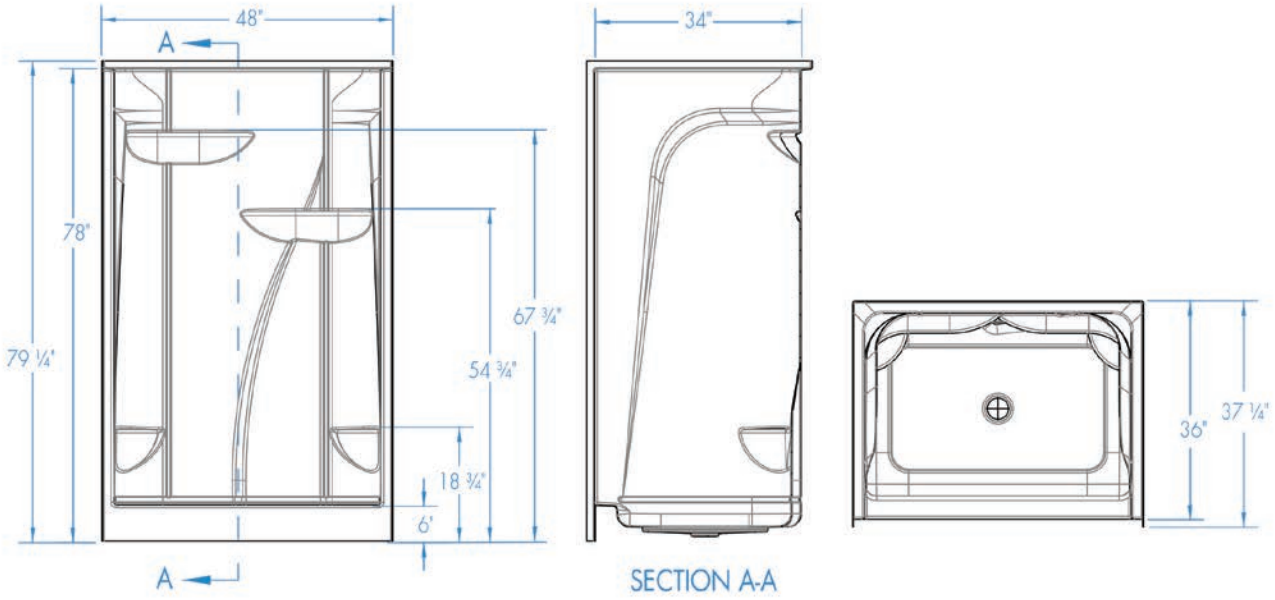
48"
A
78"
79 ¼"
67 ¾"
54 ¾"
18 ¾"
6"
A
34"
SECTION A-A
36"
37 ¼"

E160



Material : Premium Cast Acrylic

Features

- 1-Piece Shower
- Multiple toiletry shelves
- Stylized Smooth wall is easy to clean
- Slip-resistant, textured floor
- 2 integral footrests (E1600 & WE1600)
- 2 molded seats (E1602 & WE1602)
- 1 integral footrest, 1 molded seat (E160L/R & WE160L/R)
- Center drain
- Premium cast acrylic surface

E160 - PRICING CATEGORY : AM

SKU	Color	Configuration	Dimensions & Weight	MSRP
E1600-BI	Biscuit	Center Drain	60” x 36” x 78” / 140 lb 1524mm x 914mm x 1981mm / 63.49 kg	$ 1847
E1600-WH	White			$ 1812
E160L-BI	Biscuit	Left seat, center drain		$ 1847
E160L-WH	White			$ 1812
E160R-BI	Biscuit	Right seat, center drain		$ 1847
E160R-WH	White			$ 1812

OPTIONS

SKU	Description	MSRP
4200BRASDRSF	2” Brass Surefit Joint Shower Drain Brass drain material Snap in strainer-stainless steel No-caulk connection.	$ 48
TFI	Teak is a naturally water resistant material and has slats for water drainage. This give the shower the look and feel of a spa at home.	$ 1029

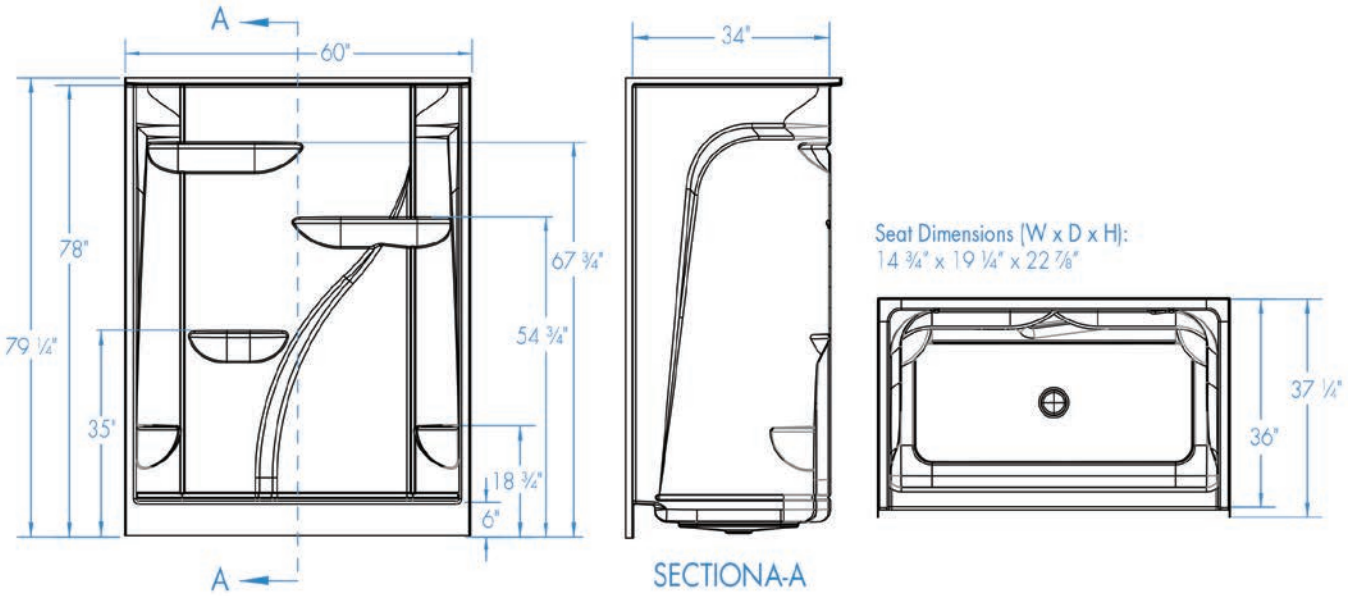
A
60"
78"
79 ¼"
35"
67 ¾"
54 ¾"
18 ¾"
6"
A
34"
SECTIONA-A
Seat Dimensions (W x D x H):
14 ¾" x 19 ¼" x 22 ⅞"
37 ¼"
36"

M148



Material : Premium Cast Acrylic

Features

- 1-Piece Shower
- Multiple toiletry shelves
- Stylized Smooth wall is easy to clean
- Slip-resistant textured floor for safety
- Premium cast acrylic surface
- Integral dome
- 1 integral footrest, 1 molded seat (M148L/R) Shown
- 2 integral footrests and No seat (M1480)
- Center drain

M148 - PRICING CATEGORY : AM

SKU	Color	Configuration	Dimensions & Weight	MSRP
M1480-BI	Biscuit	No seat, center drain	48” x 36” x 90” / 166 lb 1219mm x 914mm x 2286mm / 75.28 kg	$ 1878
M1480-WH	White			$ 1843
M148L-BI	Biscuit	Left seat, center drain		$ 1878
M148L-WH	White			$ 1843
M148R-BI	Biscuit	Right seat, center drain		$ 1878
M148R-WH	White			$ 1843

OPTIONS

SKU	Description	MSRP
4200BRASDRSF	2” Brass Surefit Joint Shower Drain Brass drain material Snap in strainer-stainless steel No-caulk connection.	$ 48
CL04	Adding color with chromatherapy gives a spa experience at home. Includes (4) lights.	$ 1281
DLN1	Ships ready to install - 120 Volt	$ 228

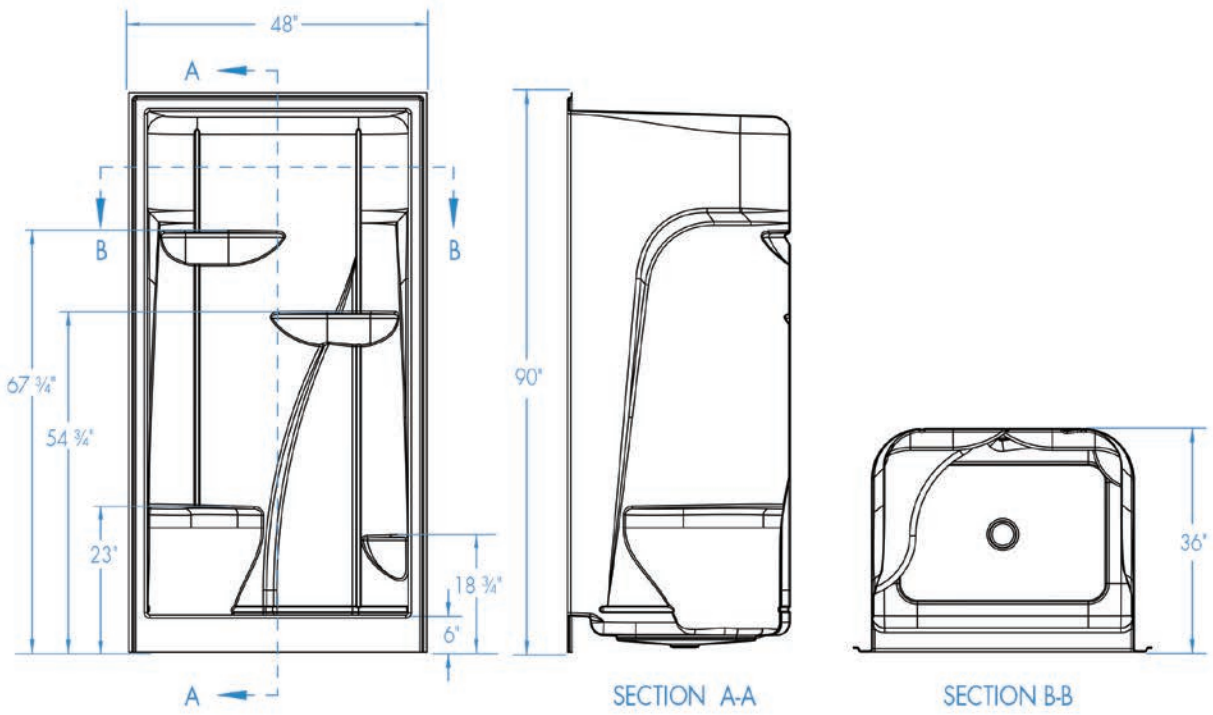
48"
A
B
B
67 ¾"
54 ¾"
23"
18 ¾"
6"
A
90"
SECTION A-A
36"
SECTION B-B

M160



Material : Premium Cast Acrylic

Features

- 1-Piece Shower
- Multiple toiletry shelves
- Stylized Smooth wall is easy to clean
- Slip-resistant textured floor for safety
- Integral dome
- 2 integral footrests (WM1600)
- 2 molded seats (WM1602)
- 1 integral footrest, 1 molded seat (WM160L/R)
- Center drain
- Premium cast Acrylic surface

M160 - PRICING CATEGORY : AM

SKU	Color	Configuration	Dimensions & Weight	MSRP
M1600-BI	Biscuit	Center Drain	60” x 36” x 90” / 179 lb 1524mm x 914mm x 2286mm / 81.18 kg	$ 1973
M1600-WH	White			$ 1938
M160L-BI	Biscuit	Left seat, center drain		$ 1973
M160L-WH	White			$ 1938
M160R-BI	Biscuit	Right seat, center drain		$ 1973
M160R-WH	White			$ 1938

OPTIONS

SKU	Description	MSRP
4200BRASDRSF	2” Brass Surefit Joint Shower Drain Brass drain material Snap in strainer-stainless steel No-caulk connection.	$ 48
CL04	Adding color with chromatherapy gives a spa experience at home. Includes (4) lights.	$ 1281
DLN1	Ships ready to install - 120 Volt	$ 228
TFI	Teak is a naturally water resistant material and has slats for water drainage. This give the shower the look and feel of a spa at home.	$ 1029

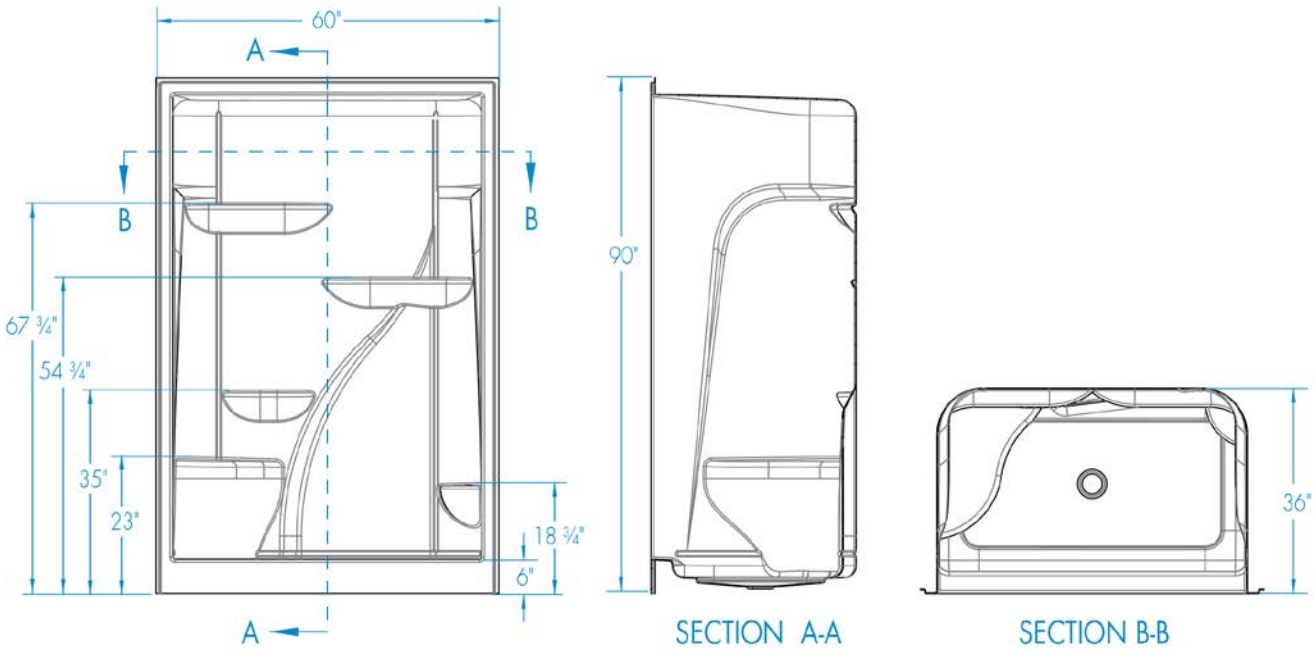
60"
A
B
B
67 ¾"
54 ¾"
35"
23"
18 ¾"
6"
A
90"
SECTION A-A
36"
SECTION B-B

CAE260S





Material : Premium Cast Acrylic

Features

- 1-Piece tub shower
- Stylized smooth wall finish
- Multiple toiletry shelves
- Left or right hand drain
- Slip-resistant, textured floor for safety
- Premium, durable cast acrylic finish
- Available in the east zone only

CAE260S - PRICING CATEGORY : AM

SKU	System	Color	Configuration	Dimensions & Weight	MSRP
CAE260SL-BI	Soaker - No System	Biscuit	Left-hand Drain	60” x 34” x 80” / 156 lb 1524mm x 864mm x 2032mm / 70.75 kg	$ 1754
CAE260SL-WH		White			$ 1719
CAE260SR-BI		Biscuit	Right-hand Drain		$ 1754
CAE260SR-WH		White			$ 1719

OPTIONS

SKU	Description	MSRP
DDWO-PC	Designer drain waste & overflow kit Available finishes: White **(WH)**, Bone **(BO)**, Polished Chrome **(PC)**, Polished Brass**(PB)**, Brushed Nickel**(BN)**,	$ 288
DDWO-PB	Designer drain waste & overflow kit Available finishes: White **(WH)**, Bone **(BO)**, Polished Chrome **(PC)**, Polished Brass**(PB)**, Brushed Nickel**(BN)**,	$ 288
DDWO-BO	Designer drain waste & overflow kit Available finishes: White **(WH)**, Bone **(BO)**, Polished Chrome **(PC)**, Polished Brass**(PB)**, Brushed Nickel**(BN)**,	$ 288
DDWO-WH		$ 288
DDWO-BN		$ 288

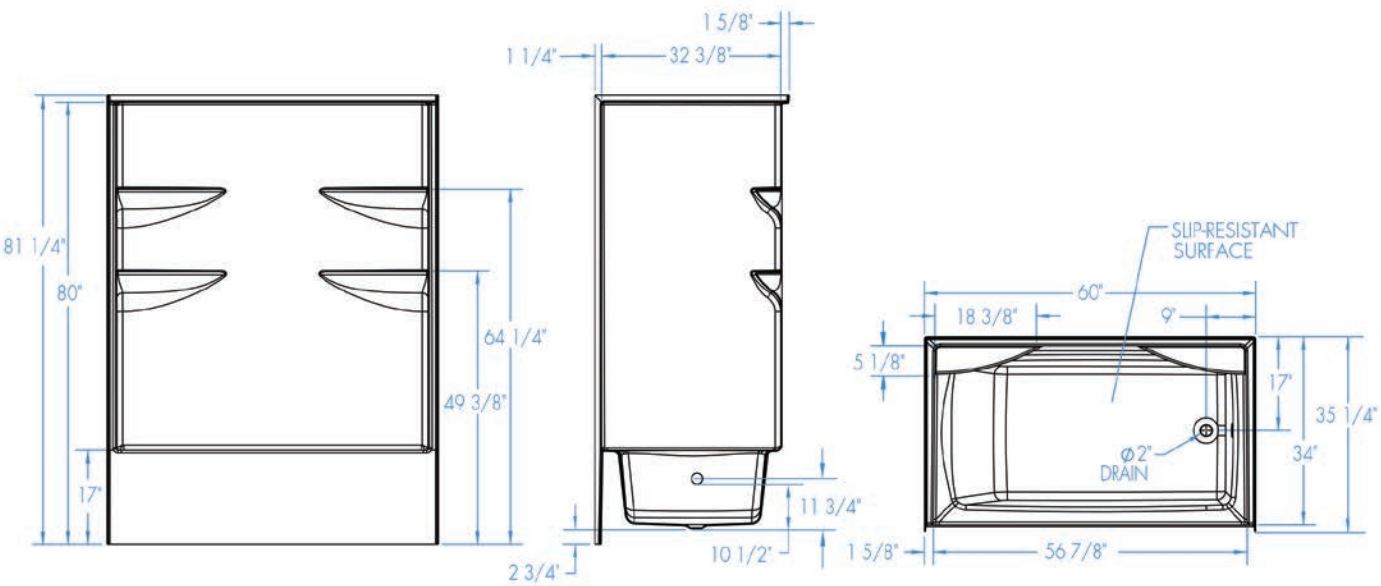
1 5/8"
1 1/4"
32 3/8"
81 1/4"
80"
64 1/4"
49 3/8"
17"
11 3/4"
10 1/2"
2 3/4"
SLIP-RESISTANT SURFACE
60"
18 3/8"
9"
5 1/8"
17"
35 1/4"
Ø 2" DRAIN
34"
1 5/8"
56 7/8"

E260





Material : Premium Cast Acrylic

Features

- 1-Piece tub shower
- Stylized smooth wall finish
- Multiple toiletry shelves
- Sculpted armrests
- Left or right Hand drain
- Slip-resistant, textured floor for safety
- Premium, durable cast acrylic finish
- Available in the east zone only

E260 - PRICING CATEGORY : AM

SKU	System	Color	Configuration	Dimensions & Weight	MSRP
E260L-BI	Soaker - No System	Biscuit	Left-hand Drain	60” x 34” x 78” / 156 lb 1524mm x 864mm x 1981mm / 70.75 kg	$ 1754
E260L-WH		White			$ 1719
E260R-BI		Biscuit	Right-hand Drain		$ 1754
E260R-WH		White			$ 1719

OPTIONS

SKU	Description	MSRP
DDWO-PC	Designer drain waste & overflow kit Available finishes: White **(WH)**, Bone **(BO)**, Polished Chrome **(PC)**, Polished Brass**(PB)**, Brushed Nickel**(BN)**,	$ 288
DDWO-PB	Designer drain waste & overflow kit Available finishes: White **(WH)**, Bone **(BO)**, Polished Chrome **(PC)**, Polished Brass**(PB)**, Brushed Nickel**(BN)**,	$ 288
DDWO-BO	Designer drain waste & overflow kit Available finishes: White **(WH)**, Bone **(BO)**, Polished Chrome **(PC)**, Polished Brass**(PB)**, Brushed Nickel**(BN)**,	$ 288
DDWO-WH		$ 288
DDWO-BN		$ 288

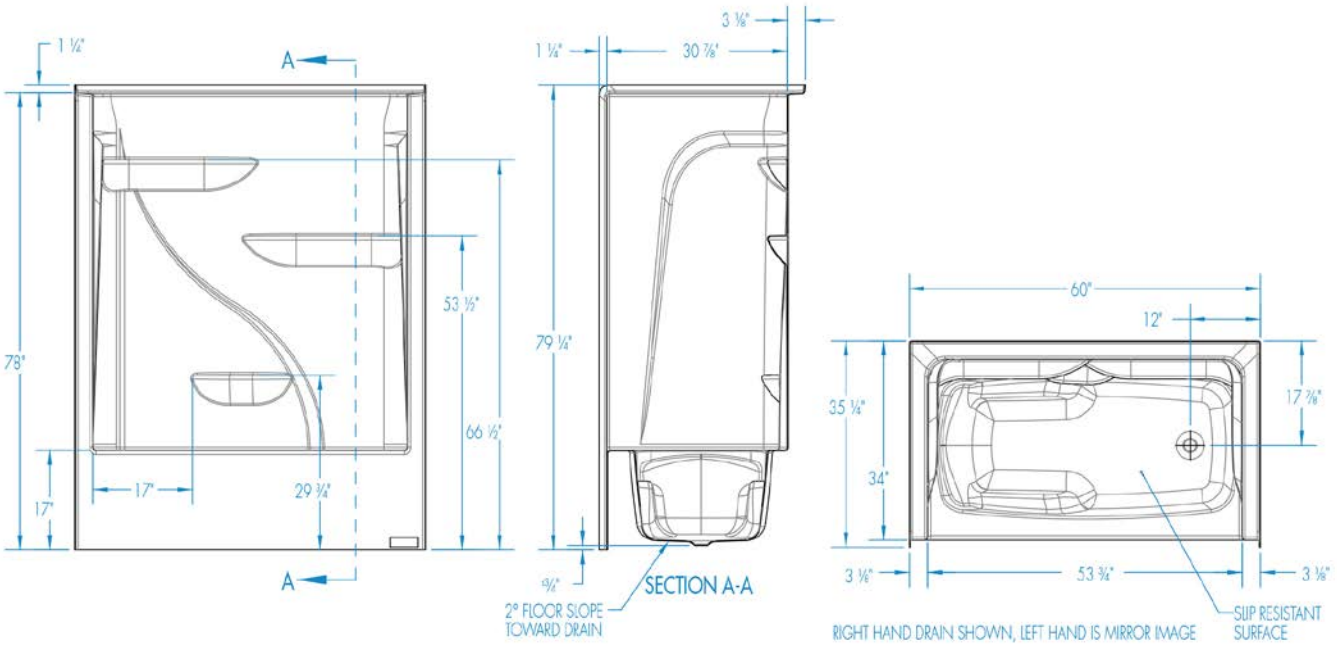
1 ¼"
A
78"
53 ½"
66 ½"
17"
17"
29 ¾"
A
3 ⅛"
1 ¼"
30 ⅞"
79 ¼"
½"
2° FLOOR SLOPE TOWARD DRAIN
SECTION A-A
60"
12"
35 ¼"
34"
17 ⅞"
3 ⅛"
53 ¾"
3 ⅛"
RIGHT HAND DRAIN SHOWN, LEFT HAND IS MIRROR IMAGE
SLIP RESISTANT SURFACE

M260





Material : Premium Cast Acrylic

Features

- 1-Piece tub shower
- Stylized smooth wall finish
- Integral dome top
- Multiple toiletry shelves
- Sculpted armrests
- Left or right hand drain
- Slip-resistant, textured floor for safety
- Premium, durable cast acrylic finish
- Available in the East zone only

M260 - PRICING CATEGORY : AM

SKU	System	Color	Configuration	Dimensions & Weight	MSRP
M260L-BI	Soaker - No System	Biscuit	Left-hand Drain	60” x 34” x 90” / 170 lb 1524mm x 864mm x 2286mm / 77.1 kg	$ 1957
M260L-WH		White			$ 1922
M260R-BI		Biscuit	Right-hand Drain		$ 1957
M260R-WH		White			$ 1922

OPTIONS

SKU	Description	MSRP
CL04	Adding color with chromatherapy gives a spa experience at home. Includes (4) lights.	$ 1281
DDWO-PC	Designer drain waste & overflow kit Available finishes: White **(WH)**, Bone **(BO)**, Polished Chrome **(PC)**, Polished Brass**(PB)**, Brushed Nickel**(BN)**,	$ 288
DDWO-PB	Designer drain waste & overflow kit Available finishes: White **(WH)**, Bone **(BO)**, Polished Chrome **(PC)**, Polished Brass**(PB)**, Brushed Nickel**(BN)**,	$ 288
DDWO-BO		$ 288
DDWO-WH		$ 288
DDWO-BN		$ 288
DLN1	Ships ready to install - 120 Volt	$ 228

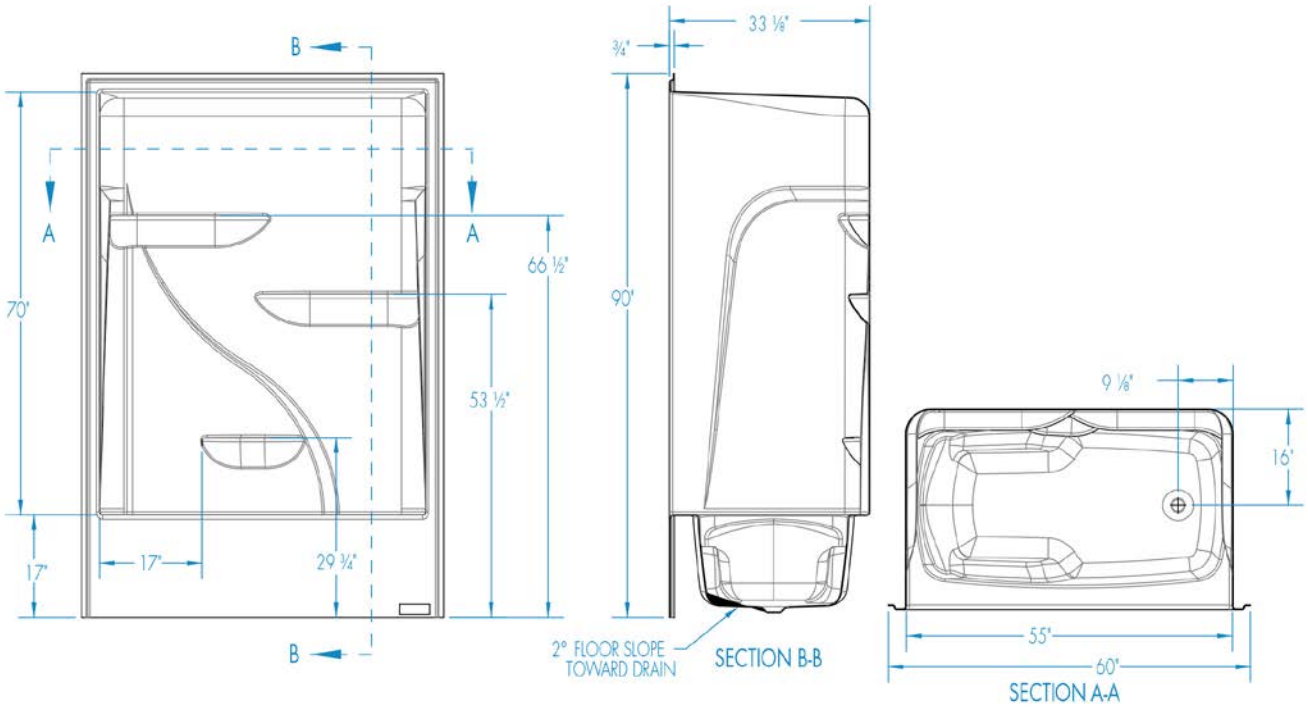

Made with Pagination.com

AQUATIC

The bath people

For any general questions or comments,
please contact marketing@aquaticbath.com

1-800-945-2726

Order Processing
orders@aquaticbath.com

Customer Care
customercarearlington@americanbathgroup.com

Technical Services
warranty@americanbathgroup.com

aquaticbath.com

Aquatic is a proud member of the ABG family — **Building a better bathware industry**